STANDARD DRAWING LIST
FEBRUARY, 2013

DRAWING BY:

NUMBER	NAME (additional required materials)	* DATE
A-1	Freeway Grading	7-09
A-2	Rural Principal Arterial Grading	7-09
A-3	Rural Minor Arterial Grading	7-09
A-4	Rural Major Collector Grading	7-09
A-5	Superelevation	3-05
A-6	Typical Roadside Slope Treatment	7-09
A-7	Median Crossovers	3-05
A-8	Standard Template	8-11
A-9	ITD Roadway Nomenclature Location & Examples (requires sheets 1 of 4, 2 of 4, 3 of 4, & 4 of 4)	10-10
A-10	Parabolic Crown (requires sheets 1 of 2 & 2 of 2)	10-10
A-11	Urban Parkway Section (Low Speed Design) (requires K-7)	10-10
A-12	Suburban Parkway Section (High Speed Design) (requires K-7)	10-10
A-13	Rural Parkway Sections (High Speed Design) (requires K-7)	5-05
C-1-A-1	Urban Concrete Pavement Details	11-11
C-1-A-2	Manhole Collars (PCC Pavement Roundouts)(requires sheet 1 of 2, 2 of 2, & dwg. E-9)	10-11
C-1-B	Doweled Concrete Pavement Details (requires sheets 1 of 3, 2 of 3, & 3 of 3)	10-11
C-1-C	Ramp Gore Details (requires sheet 1 of 2, 2 of 2, & dwg. C-1-B)	10-11
C-2-A	Rumble Strips for Multi-lane Roadways Options A & B (requires sheets 1 of 2 & 2 of 2)	11-04
C-2-B	Shoulder Rumble Strips for Two-way Roadways Options A & B	11-11
C-2-C	Centerline Rumble Strips For Two-Way Roadways	9-11
D-1-A	Runoff Drain or Embankment Protector	10-10
D-1-B	Runoff Drain or Embankment Protector with Slotted Drain (requires sheets 1 of 2, 2 of 2, & dwgs. D-5 & E-6-H)	02-13
D-2-A	Culvert Inlet Headwall	12-12
D-3-C	Metal Safety Slope Aprons (requires sheets 1 of 2 & 2 of 2)	12-12
D-4-A	Watertight Coupling Bands for Corrugated Metal Pipes (requires sheets 1 of 2 & 2 of 2)	3-05
D-4-B	12" Thru 30" Slotted Drain (requires D-4-A)	12-12
D-5	Galvanized Steel Aprons for Pipe Culverts	3-05
D-5-A	Concrete Aprons for Pipe Culverts	12-12
D-6	Precast Concrete Headgate	3-05
D-7	Concrete Headwall for Twin Pipe Culverts (requires sheets 1 of 2 & 2 of 2)	3-05
D-8	Concrete Headwall for Single Pipe Culvert (requires sheets 1 of 2 & 2 of 2)	3-05
D-9	Concrete Headwall for Arch Pipe Culvert (requires sheets 1 of 2 & 2 of 2)	3-05
D-10	Concrete Headwall for Siphons (requires sheet 1 of 2 & 2 of 2)	12-05
D-12	Conduit Installation for New Roadways & Approaches	10-10
D-13	Conduit Installation for Existing Roadways & Approaches (requires D-12)	1-05
E-6-A	Inlets & Catch Basins Types 1, 2, & 3 (requires sheets 1 of 2 & 2 of 2)	11-08
E-6-B	Inlets & Catch Basins Types 1A, 2A, & 3A (requires sheet 1 of 2 & 2 of 2)	11-08
E-6-C	Inlets & Catch Basins Types 4 & 5	11-08
E-6-D	Catch Basin Type 6	11-08
E-6-E	Catch Basin Type 7 (requires sheet 1 of 2 & 2 of 2)	11-08
E-6-F	Inlet Type 8	11-08
E-6-G	Inlet Median Drain Type 9	10-10
E-6-H	Catch Basin Type 10 (requires D-1-B)	02-13
E-7	Manhole Type A (requires E-9)	10-10
E-7-C	Manholes Type C & D (requires E-9)	5-07

DRAWING BY:

NUMBER	NAME (additional required materials)	* DATE
E-8	Manhole Type B (requires E-9)	5-07
E-9	Standard Manhole Frame, Cover, & Concrete Collar	10-10
F-1-A	Cattle Guard Type A	12-12
F-1-B	Cattle Guard Type B (requires sheets 1 of 2 & 2 of 2)	12-05
F-1-C	Cattle Guard Type C, Painted Cattle Guard	12-12
F-2-A	Standard Barbed, Woven, Mesh, Combination Wire Fences, & Fencing Details (requires sheets 1 of 3, 2 of 3, & 3 of 3)	12-12
F-2-B	High Tension 8 Wire Fence	12-12
F-2-C	Gate Types 1, 1A, & 2 (requires sheets 1 of 2, 2 of 2, & dwg. F-2-A)	02-13
F-2-D	Chain Link Fence - Fence Type 4 (requires sheets 1 of 2 & 2 of 2)	02-13
F-2-E	Wildlife Fence - Fence Type 9	10-05
G-1-A-1	Guardrail Slope Treatment Types A & B	8-11
G-1-A-2	W-Beam Guardrail Installation Assemblies	12-10
G-1-A-3	W-Beam Guardrail Posts, Blockouts, & Hardware (requires sheets 1 of 2 & 2 of 2)	12-10
G-1-A-4	Guardrail Bolting Hardware for W-Beam & Thrie Beam	4-06
G-1-A-5	Thrie Beam Guardrail (requires sheets 1 of 2 & 2 of 2)	10-10
G-1-B	Guardrail Terminals Type 1 & 1-A (requires G-1-A-1 through G-1-A-4)	10-10
G-1-C-1	Guardrail Terminal Type 2-A, With 10:1 or Flatter Foreslope (requires sheets 1 of 2, 2 of 2, & dwgs. G-1-A-1 through G-1-A-4)	12-10
G-1-C-2	Guardrail Terminal Type 2-B, for Less Than 10 : 1 to 6 : 1 Foreslope (requires sheets 1 of 2, 2 of 2, & dwgs. G-1-A-1 through G-1-A-4)	12-10
G-1-E	Guardrail Terminal Type 3 (requires sheets 1 of 2, 2 of 2, & dwgs. G-1-A-1 through G-1-A-5, & H-1-A)	8-11
G-1-F-1	Guardrail Terminal Type 5 Alternate "A" (requires G-1-A-1 through G-1-A-4)	5-06
G-1-F-2	Guardrail Terminal Type 5 Alternate "B" (requires G-1-A-1 through G-1-A-4)	10-10
G-1-G	Guardrail Terminal Type 6 Options 1, 2, & 3 (Bullnose Guardrail System) (requires sheets 1 of 3, 2 of 3, 3 of 3, & dwgs. G-1-A-1 through G-1-A-5)	10-10
G-1-H	Guardrail Terminals Type 7 & 8 (requires G-1-A-1 through G-1-A-4)	10-10
G-1-I	Guardrail Terminal Type 11 (requires G-1-A-1 through G-1-A-4)	10-10
G-1-J	Guardrail Terminal Types 4-A & 4-B (requires G-1-A-1 through G-1-A-4 & R-2 when needed)	5-06
G-1-K	Guardrail Terminal Type 9 (requires sheets 1 of 2, 2 of 2, & dwgs. G-1-A-1 through G-1-A-4)	10-10
G-1-L	Guardrail Installation for Minor Structures & Large Culverts (requires sheets 1 of 2, 2 of 2, & dwgs. G-1-A-1 through G-1-A-4)	12-10
G-1-M	Guardrail Terminal Type 10 (requires G-1-A-1 through G-1-A-4)	10-10
G-1-N	Guardrail Terminal Type 12 (requires G-1-A-1 through G-1-A-4)	10-10
G-2-A	Concrete Barrier & Terminal Type A	10-10
G-2-A-1	20' Concrete Barrier (requires sheets 1 of 2 & 2 of 2)	10-10
G-2-A-2	10' Concrete Barrier (requires sheets 1 of 2 & 2 of 2)	10-10
G-2-C	Concrete Parapet to Thrie Beam Connector (requires sheets 1 of 2, 2 of 2, & dwg. G-1-E)	10-10
G-2-D	Concrete Barrier to Thrie Beam Guardrail Connector (requires sheets 1 of 2, 2 of 2, & dwgs. G-1-E AND G-2-A-1, OR G-2-A-2)	11-04
G-2-E	Concrete Transition Barrier (requires G-2-A)	12-10
G-2-F	Interim Bridge Rail Retrofit (See Bridge Drawings B13.7A, B13.7B & B13.7C)	N/A

N/A - DRAWING NOT AVAILABLE
* DATE OF REVISION.

REVISIONS			
NO.	DATE	BY	DESCRIPTION

DESIGNED
DESIGN CHECKED
DETAILED
DRAWING CHECKED

SCALES SHOWN ARE FOR 11" X 17" PRINTS ONLY
CADD FILE NAME StdList1_0213.dgn
DRAWING DATE:

IDAHO TRANSPORTATION DEPARTMENT

PROJECT NO.

STANDARD DRAWING LIST (1 of 2)

English
COUNTY
KEY NUMBER
SHEET 1 OF 2

STANDARD DRAWING LIST
FEBRUARY, 2013

DRAWING BY:

NUMBER	NAME (additional required materials)	* DATE
G-2-H	Special Cast-in-place Concrete Barrier (requires sheets 1 of 2 & 2 of 2, dwgs. G-2-A-1 or G-2-A-2)	5-07
G-2-I-1	Tall Concrete Median Barrier (requires sheets 1 of 2 & 2 of 2)	10-04
G-2-I-2	Tall to Standard Transition Barrier (requires sheets 1 of 2 & 2 of 2)	10-04
G-3-A	Delineators & Installation (requires sheets 1 of 2 & 2 of 2)	11-11
G-3-B	Snow Poles (requires G-3-A)	5-05
H-1-A	Curbs, Gutters, Traffic Separators, & Raised Channelization End Treatment	9-10
H-1-B	Sidewalk, Islands, and A.D.A. Curb & Gutter	8-11
H-2-A	Sidewalks & A.D.A. Facilities: New Construction (requires sheets 1 of 4, 2 of 4, 3 of 4, 4 of 4, & dwg. H-3)	10-11
H-2-B	Sidewalks & A.D.A. Facilities: Retrofit Applications (requires sheets 1 of 4 & 2 of 4 & 3 of 4 & 4 of 4)	11-11
H-2-C	Sidewalks & A.D.A. Pedestrian Pushbutton Details	7-10
H-3	Urban Approaches and Concrete Sidewalk (requires sheets 1 of 3, 2 of 3, 3 of 3, & dwg. H-1-B)	9-10
H-4-A	Rural Approaches (Private, Commercial, & Public)	6-07
H-4-B	Mailbox Turnout & Installation (requires H-4-A)	02-13
H-5-A	Mailbox Assemblies & Mounting Hardware (requires sheets 1 of 5, 2 of 5, 3 of 5 , 4 of 5, 5 of 5 & dwgs. G-3-A & H-4-B)	02-13
H-5-B	Mailbox Snow Shield	8-11
I-1-A	Traffic Control Methods for Lane Closure (Drawing Removed/Pending Revisions)	N/A
I-2-A	Monument Markers & Witness Posts (requires G-3-A)	12-12
I-2-B	Street Monument Marker & Installation (requires I-2-A)	12-12
I-5	Loop Detectors - 10 ft/sec² Deceleration Rate	7-10
I-6-A	Mast Arm Traffic Signal Poles (requires H-2-C)	7-10
I-6-B	Frangible Cast Base Traffic Signal Poles (requires H-2-C)	7-10
I-7-A	Foundation Details for Signal Cabinets	5-05
I-7-B	Electronic Cabinet Foundation Detail	8-96
I-7-C	Mastarm Signal Pole, Lighting Pole and Pedestrian Pole Foundation Details	7-10
I-8-A-1	Breakaway Sign Post Installation Type A-1 (requires I-8-A-2)	12-07
I-8-A-2	Breakaway Sign Post Installation Type A-1 (requires I-8-A-1)	12-99
I-8-B-1	Breakaway Sign Post Installation Type A-2, A-3, & A-4 (requires I-8-B-2)	12-99
I-8-B-2	Breakaway Sign Post Installation Type A-2, A-3, & A-4 (requires I-8-B-1)	12-99
I-8-C-1	Breakaway Sign Post Installation Type A-8 & A-9 (requires I-8-C-2)	12-99
I-8-C-2	Breakaway Sign Post Installation Type A-8 & A-9 (requires I-8-C-1)	12-99
I-8-D-1	Breakaway Sign Post Installation Type B-2 (requires I-8-D-3)	7-10
I-8-D-2	Breakaway Sign Post Installation Type B-3, & B-4 (requires I-8-D-3)	9-11
I-8-D-3	Breakaway Sign Post Installation Type B-2, B-3, B-4 (requires I-8-D-1 or I-8-D-2)	7-10
I-8-E	Breakaway Sign Posts Type D	8-96
I-8-F	Breakaway Sign Posts Type E	12-01
I-9-A-1	B Post and Brace Angle Detail (requires I-9-A-2)	9-11
I-9-A-2	B Post and Brace Angle Detail (requires I-9-A-1)	9-11
I-9-B	Cardinal Route Marker Assemblies (requires I-8-D-1, I-8-D-2 & I-8-D-3)	9-10
I-9-C	Route Marker Bracket Details	12-01
I-10-A	Extruded Aluminum Signs	12-01
I-10-B	Exit Number Panel (requires I-10-A)	12-07
I-11-A	Standard Route Markers (requires I-11-B & I-12-F)	7-03
I-11-B	Route Marker Numeral Details (requires I-11-A)	12-01

DRAWING BY:

NUMBER	NAME (additional required materials)	* DATE
I-11-C	Route Marker Auxiliary Panels (requires I-12-F)	7-03
I-12-A	Standard Regulatory Signs (requires I-12-F)	6-07
I-12-D	Standard Warning Signs (requires I-12-F)	9-11
I-12-F	Punching Schedule for Type "B" or Type "E" Signs	6-07
I-13-A	Standard Guide and Service Signs	12-01
I-13-B	Interstate Exit Number Panel E1-5	12-07
I-20	Mileposts	12-01
I-21-A	Standard Pavement Markings for Arterial and Collector Roadways	7-10
I-22-A	Standard Pavement Markings Freeways with 22 Foot Wide Ramps	5-05
I-22-B	Standard Pavement Markings Freeways with 26 Foot Wide Ramps	5-05
K-7	Methods of Planting Trees and Shrubs (requires sheets 1 of 2 & 2 of 2)	10-10
K-10	Rest Area & Roadside Facilities Symbols	12-02
P-1-A	Temporary Erosion Control Slope Drains (requires D-4-A, P-1-D & P-1-E)	02-13
P-1-B	Temporary Sediment Control Barriers (requires P-1-D)	02-13
P-1-C	Erosion & Sediment Control Sediment Trap Basin (requires P-1-D & P-4-A)	10-11
P-1-D	Temporary Erosion Control Diversion Devices & Site Example	12-12
P-1-E	Temporary Sediment Control Berms, Dikes, and Swales (requires P-1-D)	02-13
P-1-F	Erosion and Sediment Control for Temporary Roads (requires P-1-D)	12-12
P-1-G	Temporary Erosion Control Berms/Dikes & Swales (requires P-1-D)	N/A
P-1-H	Temporary Sediment Control Inlet Protection (requires P-1-D)	02-13
P-2-A	Erosion and Sediment Control Gabions and Revet Mattresses	02-13
P-2-B	Sediment Control Rock Check Dams Types (requires P-2-A)	02-13
P-2-C	Permanent Erosion Control Slope & Channel Protection (requires P-2-A)	10-10
P-2-D	Chutes & Flumes (requires sheets 1 of 2, 2 of 2, & dwg. P-2-A)	10-10
P-2-F	Permanent Erosion Control Culvert Outlet Protection (requires P-2-A)	10-10
P-3-A	Sediment Control Box (Catch Basin)	10-11
P-3-B	Water Pollution Control Sediment & Oil Trap (refer to E-9)	10-11
P-3-D	Water Pollution Control In Street Sediment & Oil Trap (requires E-7-C, refer to E-9)	12-95
P-3-E	Vehicle and Equipment Washdown (requires P-1-D)	12-12
P-4-A	Erosion & Sediment Control Retention Basin	10-10
P-4-B	Methods of Planting Trees, Shrubs, & Wattling (Facines)	10-10
P-5-A	Hazardous Materials Containment Petroleum Storage (refer to P-1-G)	10-10
P-5-B	Temporary Concrete Washout	10-10
R-1-A	Highway - Railroad Grade Crossing Signals Type 1	7-10
R-1-B	Highway - Railroad Grade Crossing Signals Type 2	7-10
R-1-C	Highway - Railroad Grade Crossing Signals Type 3 (requires sheet 1 of 2 & 2 of 2)	3-04
R-2	Highway - Railroad Grade Crossing Area	3-04
S-1-A-1	Topography (1) (Refer to CADD Standards Manual)	N/A
S-1-A-2	Topography (2) (Refer to CADD Standards Manual)	N/A
S-1-B-1	Utilities (1) (Refer to CADD Standards Manual)	N/A
S-1-B-2	Utilities (2) (Refer to CADD Standards Manual)	N/A
S-1-C-1	Right Of Way (1) (Refer to CADD Standards Manual)	N/A
S-1-C-2	Right Of Way (2) (Refer to CADD Standards Manual)	N/A

N/A - DRAWING NOT AVAILABLE
* DATE OF REVISION.

REVISIONS			
NO.	DATE	BY	DESCRIPTION

DESIGNED
DESIGN CHECKED
DETAILED
DRAWING CHECKED

SCALES SHOWN ARE FOR 11" X 17" PRINTS ONLY
CADD FILE NAME StdList2_0213.dgn
DRAWING DATE:

IDAHO TRANSPORTATION DEPARTMENT

PROJECT NO.

STANDARD DRAWING LIST (2 of 2)

English
COUNTY
KEY NUMBER
SHEET 2 OF 2

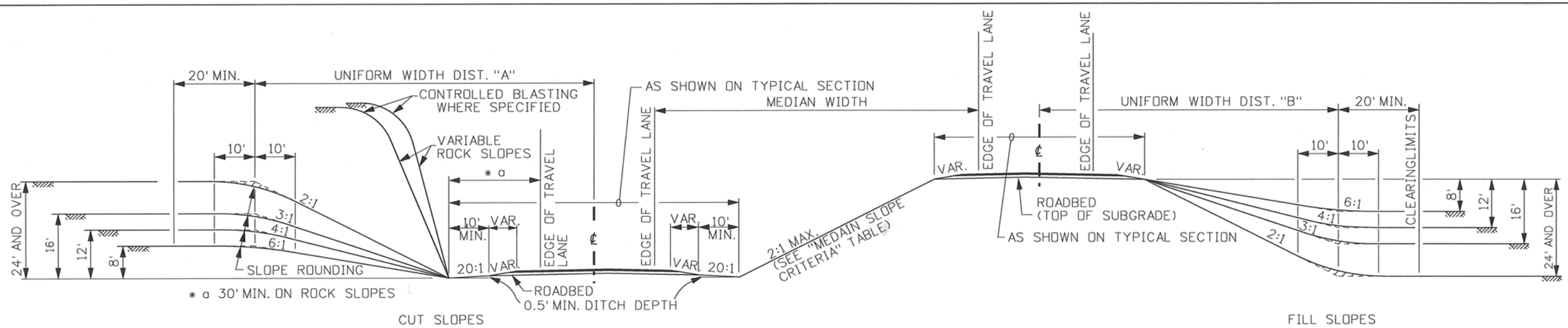

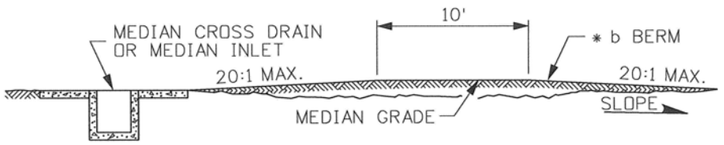

* b BERM SHALL BE CONSTRUCTED TO A HEIGHT SUFFICIENT TO PROVIDE PROPER DRAINAGE BUT NOT EXCESSIVE IN ORDER TO MAINTAIN SAFETY AND APPEARANCE.

MEDIAN BERM SECTION

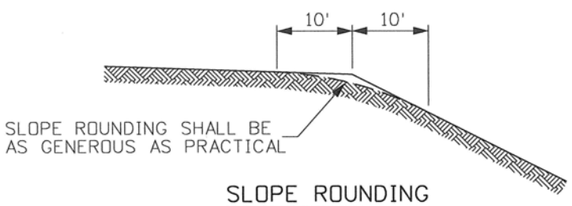

SLOPE ROUNDING

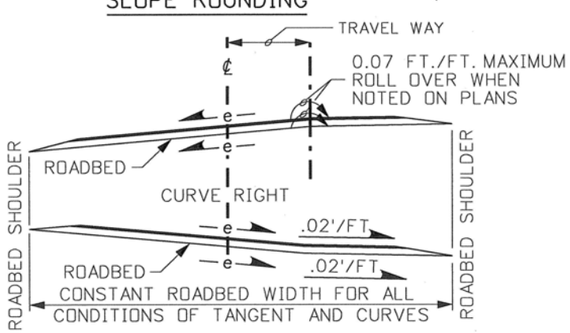

SUPERELEVATION - FOUR LANE

GUIDE FOR DETERMINING UNIFORM WIDTH

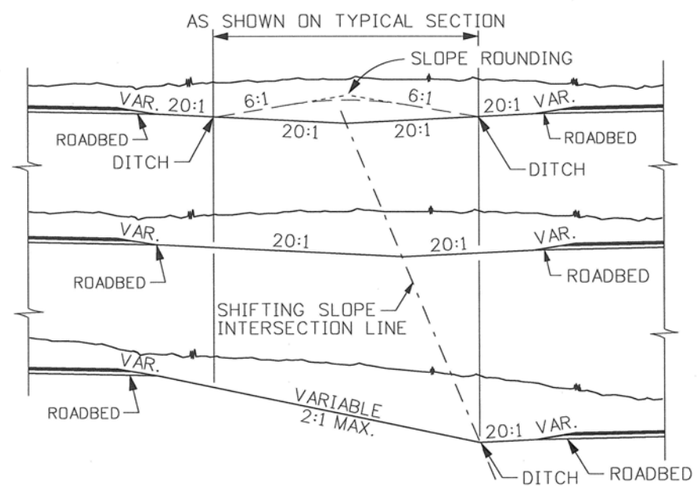

SHIFTING SLOPE MEDIAN GRADING

MEDIAN SLOPE CRITERIA
WHERE MEDIANS ARE 100' OR LESS IN WIDTH USE A 20:1 SLOPE ON EACH ROADWAY UNTILTHE HEIGHT OF UPPER ROADWAY CAUSES THE SLOPES TO INTERSECT AT A MINIMUM DITCH DEPTH ON THE LOWER ROADWAY.
WHEN THE UPPER AND LOWER GRADE ELEVATIONS OF SEPARATE ROADWAYS BECOME TOO GREAT TO USE A 20:1 MEDIAN SLOPE USE A VARIABLE SLOPE TO A MAX. OF 2:1 SLOPE. MAINTAIN THE MINIMUM DITCH OF THE LOWER ROADWAY.
FOR MEDIANS OVER 100' IN WIDTH USE STANDARD INTERSTATE SLOPES. TREAT EACH ROADWAY AS A SEPARATE ROADWAY.

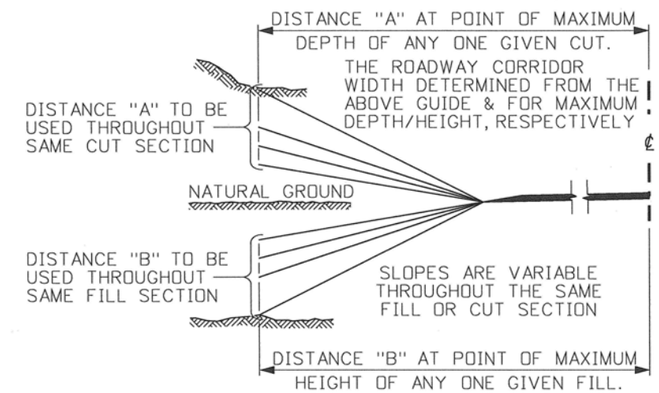

SLOPE CONSTRUCTION - UNIFORM WIDTH METHOD

NOTES

1. CUT AND FILL SLOPES IN DIFFICULT TERRAIN OR WHERE UNSTABLE SOIL EXISTS MAY REQUIRE SPECIAL CONSIDERATION. REFER TO IDAHO TRANSPORTAION DEPARTMENT'S BMP MANAUL.
2. SLOPE ROUNDING SHALL CONSIST OF TWO 10' MINIMUM CHORDS OR AN EQUAL ROUNDED SURFACE.
3. ROADWAY ROLL OVER IS NOT TO BE USED UNLESS NOTED ON PLANS.
4. ROADSIDE SLOPE TREATMENT SHALL BE DONE AS SHOWN ON STANDARD DRAWING A-6 AND/OR AS DIRECTED ON THE PLANS.
5. AS STANDARD DESIGN PROCEDURE ALL SLOPES MUST BE CHECKED TO DETERMINE IF THERE IS A GUARDRAIL WARRANT BASED ON HEIGHT AND STEEPNESS OF SLOPE.
6. WHEN THE USE OF GUARDRAIL IS WARRANTED,WIDEN SHOULDER AREAS AS SHOWN ON STANDARD DRAWING G-1-A-1.
7. THE UNIFORM WIDTH METHOD FOR SLOPE CONSTRUCTION SHALL BE USED ON ITD ROADWAY PLANS WHEN PRACTICAL.
8. NOT TO SCALE.

REVISIONS

NO.	DATE	BY	NO.	DATE	BY	NO.	DATE	BY
1	2-69		6	3-90	GB	11	5-07	MSM
2	7-70		7	12-94	MSM	12	7-09	GAM
3	1-73		8	2-00	MSM			
4	2-83		9	2-03	MSM			
5	3-87	GB	10	6-05	MSM			

SCALES SHOWN ARE FOR 11" X 17" PRINTS ONLY

CADD FILE NAME: a1__0709.std

DRAWING DATE: APRIL, 1961

IDAHO TRANSPORTATION DEPARTMENT

BOISE IDAHO

ASSISTANT CHIEF ENGINEER (DEVELOPMENT)

CHIEF ENGINEER

STANDARD DRAWING

FREEWAY GRADING

English

STANDARD DRAWING NO. A-1

SHEET 1 OF 1

PROFESSIONAL ENGINEER REGISTERED 6506 7-30-09 STATE OF IDAHO TED E. MASON

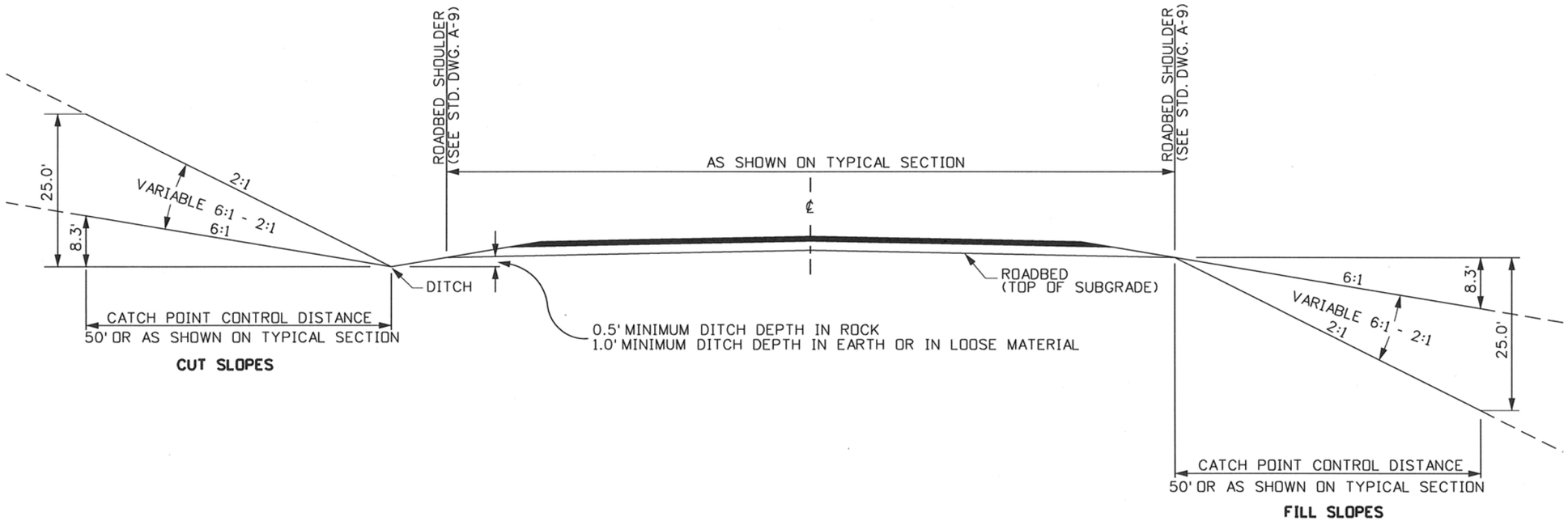

SLOPE GRADING

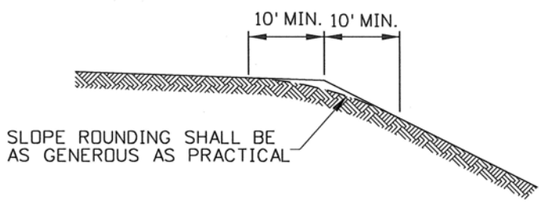

SLOPE ROUNDING

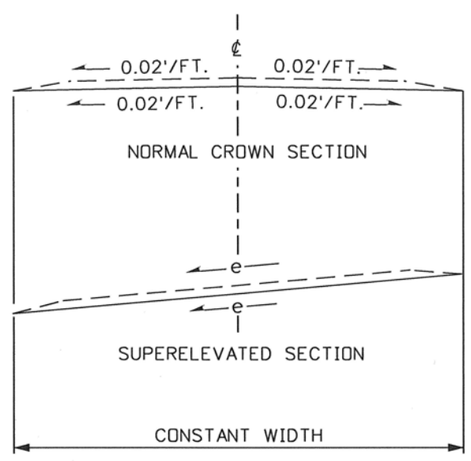

SUPERELEVATION

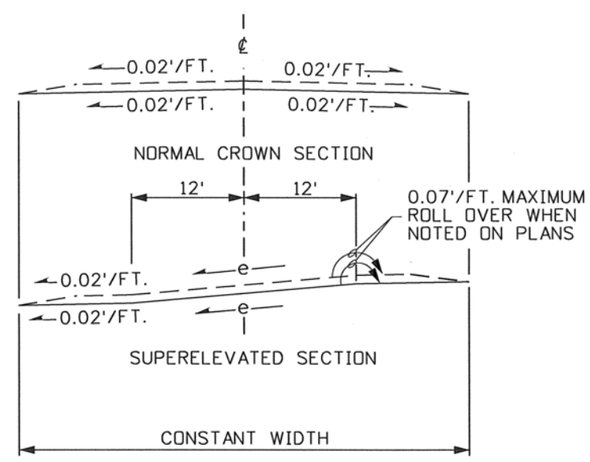

SUPERELEVATION WITH ROLL OVER

NOTES

1. FOR THE 50' CATCH POINT CONTROL DISTANCE:
   USE 6:1 SLOPE FOR CUTS AND FILLS UP TO 8.3' IN HEIGHT.
   USE VARIABLE SLOPES FOR CUTS AND FILLS OVER 8.3' AND UP TO 25' IN HEIGHT MAINTAINING THE CONSTANT 50' CATCH POINT DISTANCE.
   USE 2:1 SLOPE FOR CUTS AND FILLS OVER 25' IN HEIGHT.
   SLOPES SHOWN ARE MAXIMUM, FLATTER SLOPES SHOULD BE USED WHEN FEASIBLE.
2. CUT AND FILL SLOPES IN DIFFICULT TERRAIN MAY REQUIRE SPECIAL CONSIDERATION.
3. SLOPE ROUNDING SHALL CONSIST OF ONE OR MORE CHORDS OR ROUNDED SURFACE. THE DEPTH AND WIDTH OF SLOPE ROUNDING SHALL BE AS DIRECTED.
4. ROLL OVER WILL NOT BE USED UNLESS NOTED ON THE PLANS.
5. SLOPE TREATMENT SHALL BE AS SHOWN ON THE PLANS OR AS DIRECTED.
6. ALL SLOPES SHALL BE CHECKED TO DETERMINE IF THERE IS A GUARDRAIL WARRANT BASED ON SLOPE HEIGHT AND STEEPNESS.
7. ROADSIDE SLOPE TREATMENT SHALL BE AS SHOWN ON STANDARD DRAWING A-6 AND/OR AS DIRECTED ON THE PLANS.
8. WHEN USING GUARDRAIL, WIDEN SHOULDER AS SHOWN ON THE APPROPRIATE ITD GUARDRAIL STANDARD DRAWING.
9. NOT TO SCALE.

REVISIONS

NO.	DATE	BY	NO.	DATE	BY	NO.	DATE	BY
1	9-65		6	3-90	GB	11	7-09	GAM
2	10-66		7	4-93	MSM			
3	2-69		8	1-00	MSM			
4	2-83		9	7-03	MSM			
5	3-87		10	6-05	MSM			

SCALES SHOWN ARE FOR 11" X 17" PRINTS ONLY

CADD FILE NAME: a2__0709.std

DRAWING DATE: MAY, 1961

IDAHO TRANSPORTATION DEPARTMENT

BOISE IDAHO

ASSISTANT CHIEF ENGINEER (DEVELOPMENT)

CHIEF ENGINEER

STANDARD DRAWING

RURAL PRINCIPAL ARTERIAL GRADING

English

STANDARD DRAWING NO. A-2

SHEET 1 OF 1

PROFESSIONAL ENGINEER REGISTERED 6506 7-30-09 STATE OF IDAHO TED E. MASON

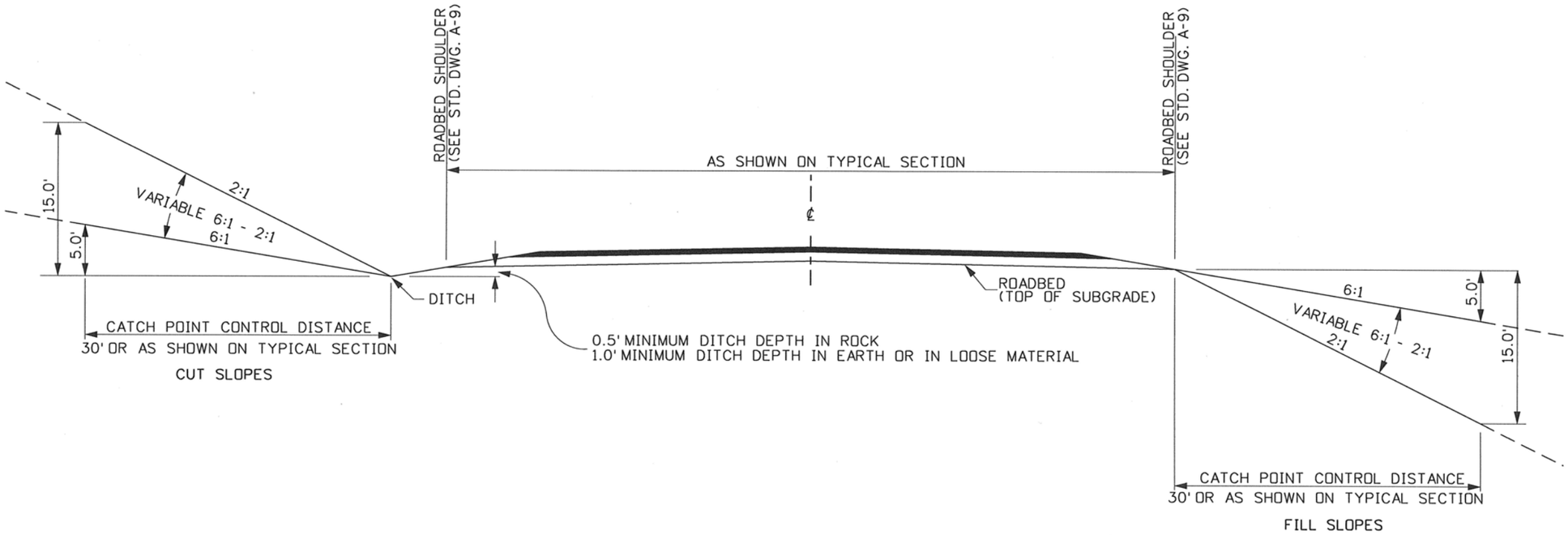

SLOPE GRADING

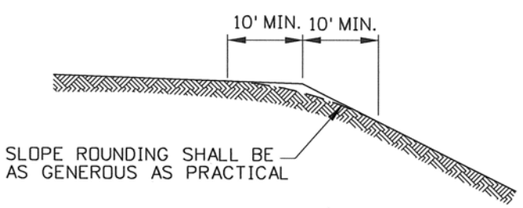

SLOPE ROUNDING

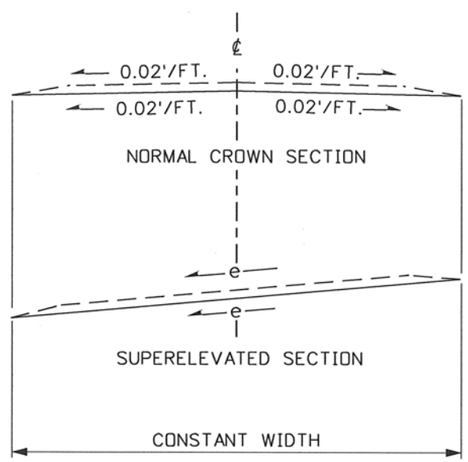

SUPERELEVATION

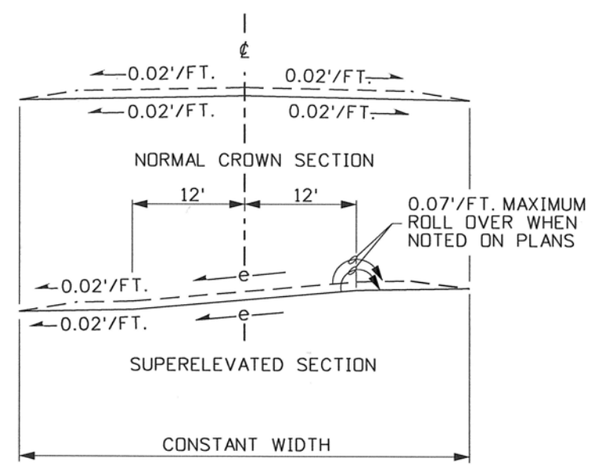

SUPERELEVATION WITH ROLL OVER

NOTES

1. FOR THE 30' CATCH POINT CONTROL DISTANCE:
   USE 6:1 SLOPE FOR CUTS AND FILLS UP TO 5.0' IN HEIGHT.
   USE VARIABLE SLOPES FOR CUTS AND FILLS OVER 5.0' AND UP TO 15' IN HEIGHT MAINTAINING THE CONSTANT 30' CATCH POINT DISTANCE.
   USE 2:1 SLOPE FOR CUTS AND FILLS OVER 15' IN HEIGHT.
   SLOPES SHOWN ARE MAXIMUM, FLATTER SLOPES SHOULD BE USED WHEN FEASIBLE.
2. CUT AND FILL SLOPES IN DIFFICULT TERRAIN MAY REQUIRE SPECIAL CONSIDERATION.
3. SLOPE ROUNDING SHALL CONSIST OF ONE OR MORE CHORDS OR ROUNDED SURFACE. THE DEPTH AND WIDTH OF SLOPE ROUNDING SHALL BE AS DIRECTED.
4. ROLL OVER WILL NOT BE USED UNLESS NOTED ON THE PLANS.
5. SLOPE TREATMENT SHALL BE AS SHOWN ON THE PLANS OR AS DIRECTED.
6. ALL SLOPES SHALL BE CHECKED TO DETERMINE IF THERE IS A GUARDRAIL WARRANT BASED ON SLOPE HEIGHT AND STEEPNESS.
7. ROADSIDE SLOPE TREATMENT SHALL BE AS SHOWN ON STANDARD DRAWING A-6 AND/OR AS DIRECTED ON THE PLANS.
8. WHEN USING GUARDRAIL, WIDEN SHOULDER AS SHOWN ON THE APPROPRIATE ITD GUARDRAIL STANDARD DRAWING.
9. NOT TO SCALE.

REVISIONS

NO.	DATE	BY	NO.	DATE	BY	NO.	DATE	BY
1	9-65		6	3-90	GB	11	7-09	GAM
2	10-66		7	4-93	MSM			
3	2-69		8	1-00	MSM			
4	2-83		9	7-03	MSM			
5	3-87		10	6-05	MSM			

SCALES SHOWN ARE FOR 11" X 17" PRINTS ONLY

CADD FILE NAME: a3__0709.std

DRAWING DATE: OCTOBER, 1966

IDAHO TRANSPORTATION DEPARTMENT

BOISE IDAHO

ASSISTANT CHIEF ENGINEER (DEVELOPMENT)

CHIEF ENGINEER

STANDARD DRAWING

RURAL MINOR ARTERIAL GRADING

English

STANDARD DRAWING NO. A-3

SHEET 1 OF 1

PROFESSIONAL ENGINEER REGISTERED 6506 7-30-09 STATE OF IDAHO TED E. MASON

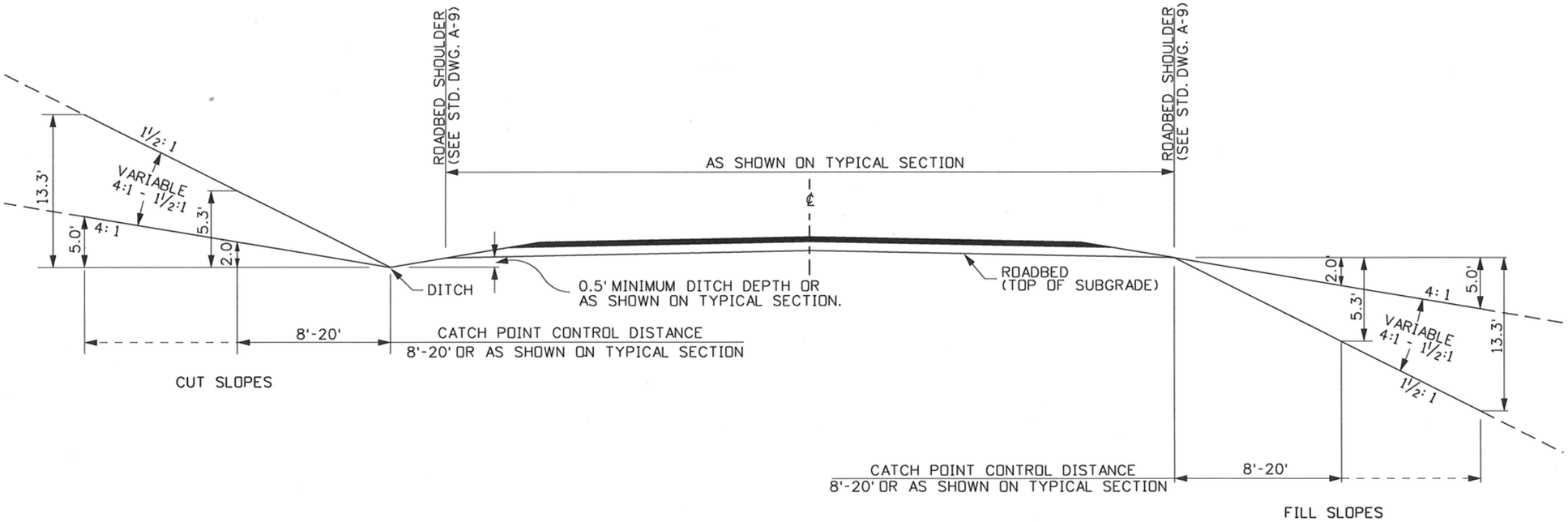

SLOPE GRADING

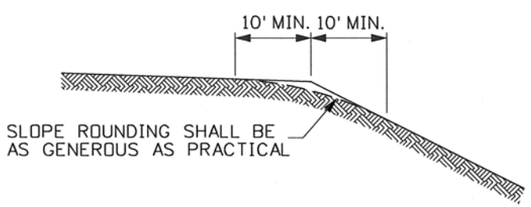

SLOPE ROUNDING

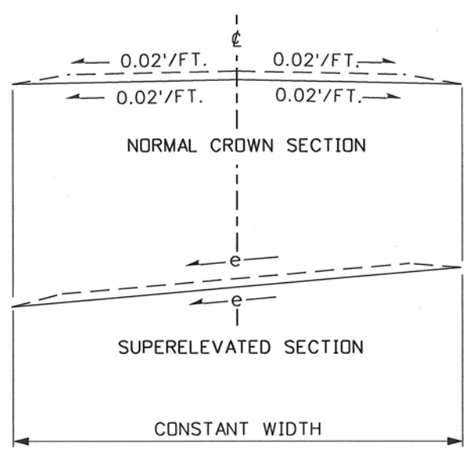

SUPERELEVATION

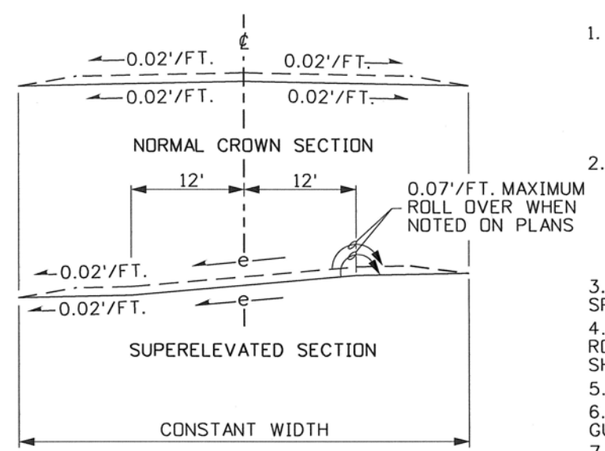

SUPERELEVATION WITH ROLL OVER

NOTES

1. FOR THE 8' CATCH POINT CONTROL DISTANCE:
   - USE 4:1 SLOPE FOR CUTS AND FILLS UP TO 2.0' IN HEIGHT.
   - USE VARIABLE SLOPES FOR CUTS AND FILLS OVER 2.0' AND UP TO 5.3' IN HEIGHT MAINTAINING THE CONSTANT 8' CATCH POINT DISTANCE.
   - USE 1½:1 SLOPE FOR CUTS AND FILLS OVER 5.3' IN HEIGHT.
2. FOR THE 20' CATCH POINT CONTROL DISTANCE:
   - USE 4:1 SLOPE FOR CUTS AND FILLS UP TO 5.0' IN HEIGHT.
   - USE VARIABLE SLOPES FOR CUTS AND FILLS OVER 5.0' AND UP TO 13.3' IN HEIGHT MAINTAINING THE CONSTANT 20' CATCH POINT DISTANCE.
   - USE 1½:1 SLOPE FOR CUTS AND FILLS OVER 13.3' IN HEIGHT.
3. CUT AND FILL SLOPES IN DIFFICULT TERRAIN MAY REQUIRE SPECIAL CONSIDERATION.
4. SLOPE ROUNDING SHALL CONSIST OF ONE OR MORE CHORDS OR ROUNDED SURFACE. THE DEPTH AND WIDTH OF SLOPE ROUNDING SHALL BE AS DIRECTED.
5. ROLL OVER WILL NOT BE USED UNLESS NOTED ON THE PLANS.
6. ALL SLOPES SHALL BE CHECKED TO DETERMINE IF THERE IS A GUARDRAIL WARRANT BASED ON SLOPE HEIGHT AND STEEPNESS.
7. WHEN USING GUARDRAIL, WIDEN SHOULDER AS SHOWN ON THE APPROPRIATE ITD GUARDRAIL STANDARD DRAWING.
8. NOT TO SCALE.

REVISIONS

NO.	DATE	BY	NO.	DATE	BY	NO.	DATE	BY
1	9-65		6	3-90	GB	11	7-05	MSM
2	10-66		7	4-93	MSM	12	7-09	GAM
3	2-69		8	2-97	MSM			
4	2-83		9	2-00	MSM			
5	3-87		10	7-03	MSM			

SCALES SHOWN ARE FOR 11" X 17" PRINTS ONLY

CADD FILE NAME: a4__0709.std

DRAWING DATE: MAY, 1962

IDAHO TRANSPORTATION DEPARTMENT

BOISE IDAHO

ASSISTANT CHIEF ENGINEER (DEVELOPMENT)

CHIEF ENGINEER

STANDARD DRAWING

RURAL MAJOR COLLECTOR GRADING

English

STANDARD DRAWING NO. A-4

SHEET 1 OF 1

PROFESSIONAL ENGINEER REGISTERED 6506 7-30-09 STATE OF IDAHO TED E. MASON

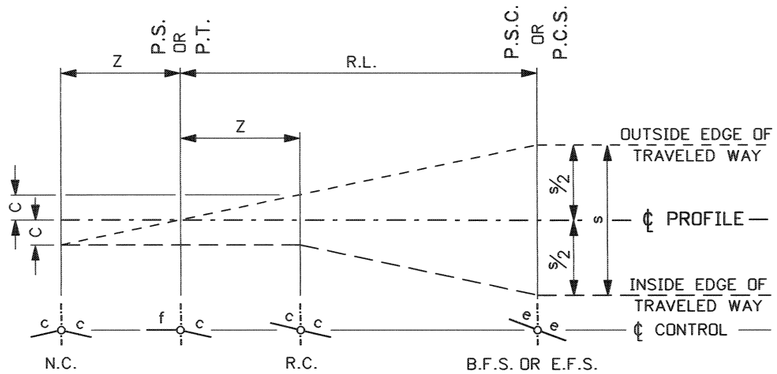

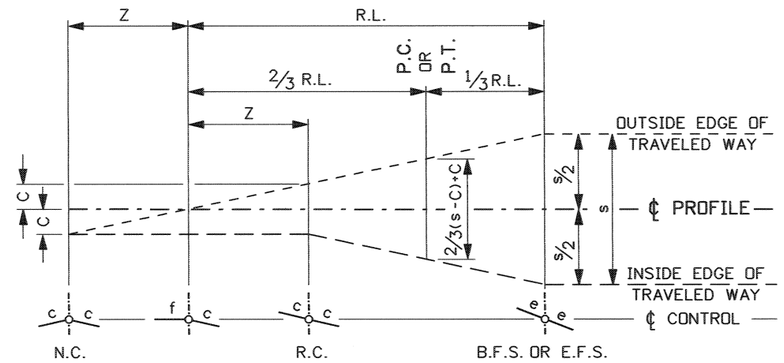

METHOD 1 - REVOLVING ABOUT CENTER LINE

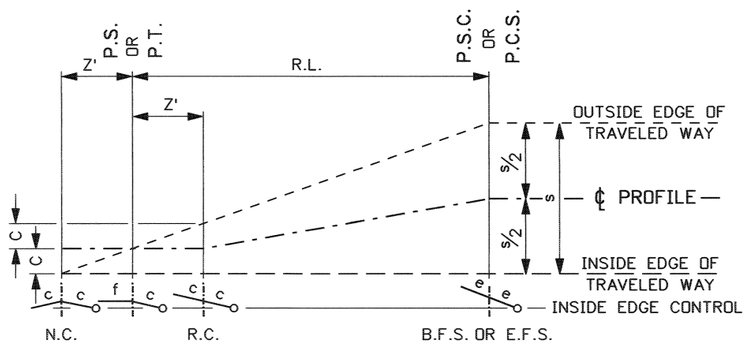

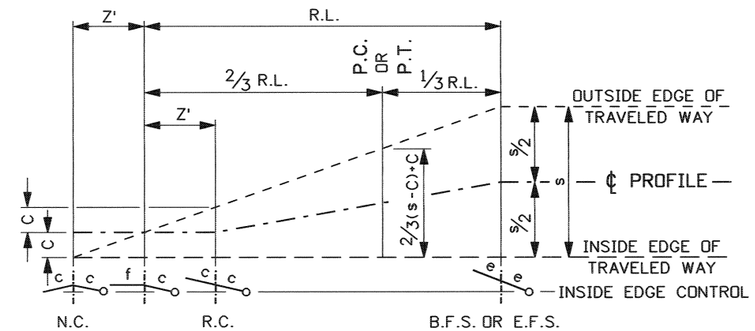

METHOD 2 - REVOLVING ABOUT INSIDE EDGE OF TRAVELED WAY

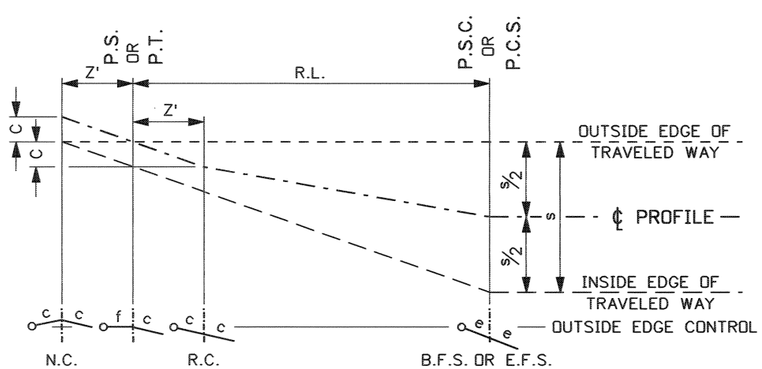

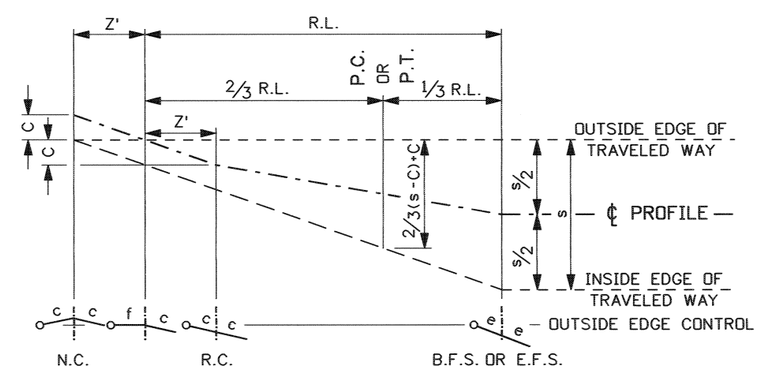

METHOD 3 - REVOLVING ABOUT OUTSIDE EDGE OF TRAVELED WAY

SPIRAL CURVE SUPERELEVATION

SIMPLE CURVE SUPERELEVATION

SUPERELEVATION NOMENCLATURE	
SYMBOL	DESCRIPTION
R.L.	RUNOFF LENGTH OR SPIRAL LENGTH
Z OR Z'	TANGENT RUNOUT LENGTH
e	SUPERELEVATION RATE (FT./FT.)
c	NORMAL CROWN RATE (FT./FT.)
f	FLAT (0 FT./FT.)
W_t	WIDTH OF TRAVELED WAY
s	$e(W_t)$
C	$c(W_t)/2$
P.C.	POINT OF CURVE
P.S.	POINT OF SPIRAL
P.T.	POINT OF TANGENT
P.C.S.	POINT OF CURVE TO SPIRAL
P.S.C.	POINT OF SPIRAL TO CURVE
N.C	NORMAL CROWN
R.C.	REVERSE CROWN
B.F.S.	BEGIN FULL SUPERELEVATION
E.F.S	END FULL SUPERELEVATION

NOTES

1. METHOD 1 SHALL BE USED TO DEVELOP SUPERELEVATION FOR ALL CURVES ON UNDIVIDED HIGHWAYS OR DIVIDED HIGHWAYS WITH SEPARATE PROFILES; HOWEVER, IF THE PLANS SHOW A PROFILE GRADE ON THE INSIDE OF THE CURVE, THEN METHOD 2 SHALL BE USED.
2. ON DIVIDED HIGHWAYS WITH NARROW MEDIANS, I.E., MEDIAN PROFILE CONTROL, METHODS 2 & 3 SHALL BE USED FOR THE RESPECTIVE ROAD BEDS.
3. WIDENING, WHEN USED, SHALL BE DEVELOPED UNIFORMLY WITHIN THE RUNOFF LENGTH ON THE INSIDE OF THE CURVE.
4. FURTHER SUPERELEVATION AND RUNOFF DESIGN INFORMATION IS AVAILABLE THE ITD DESIGN MANUAL.

REVISIONS								
NO.	DATE	BY	NO.	DATE	BY	NO.	DATE	BY
1	2-69							
2	1-97	MSM						
3	3-00	MSM						
4	3-05	MSM						

SCALES SHOWN ARE FOR 11" X 17" PRINTS ONLY

CADD FILE NAME a5__0305.std

DRWG. ORIG. DATE: FEBRUARY, 1969

IDAHO TRANSPORTATION DEPARTMENT

BOISE IDAHO

ASSISTANT CHIEF ENGINEER (DEVELOPMENT)

CHIEF ENGINEER

STANDARD DRAWING

SUPERELEVATION

English

STANDARD DRWG. NO.

A-5

SHEET 1 OF 1

PROFESSIONAL ENGINEER REGISTERED 6506 STATE OF IDAHO FRED E. MASON

3-1-05

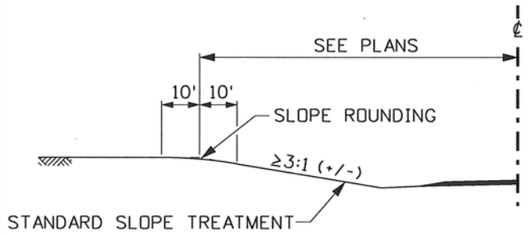

CUT SLOPES - 3:1 OR FLATTER

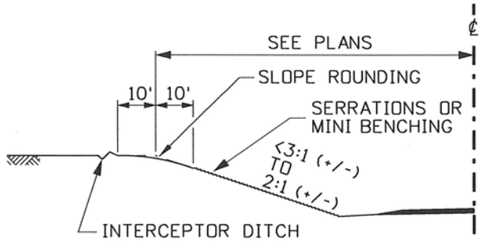

CUT SLOPES - STEEPER THAN 3:1 TO 2:1

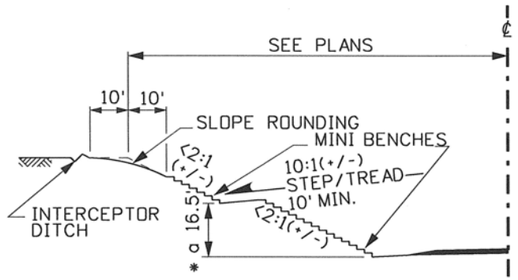

CUT SLOPES - 2:1 OR STEEPER

(SEE NOTE NO. 3)

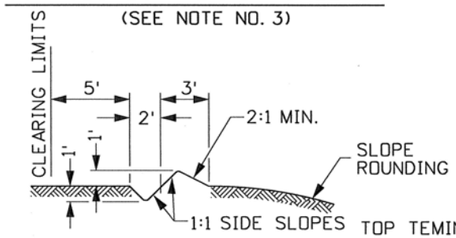

INTERCEPTOR DITCH

(SEE NOTE NO. 8)

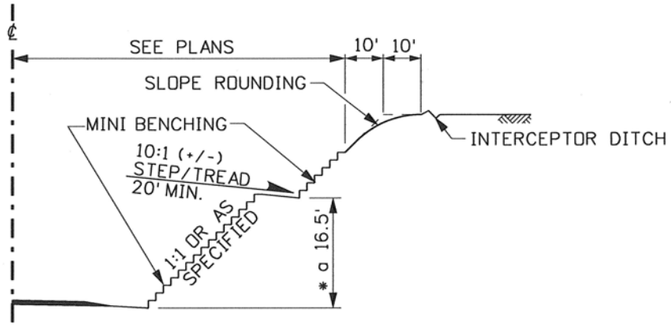

RIPPABLE ROCK CUT - 1:1 OR AS SPECIFIED

(SEE NOTE NO. 3)

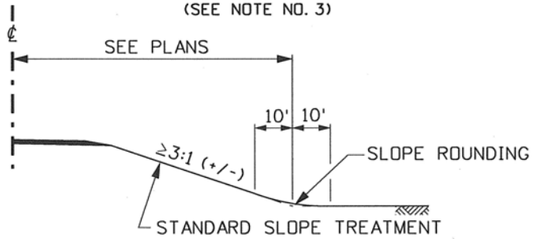

FILL SLOPES - 3:1 OR FLATTER

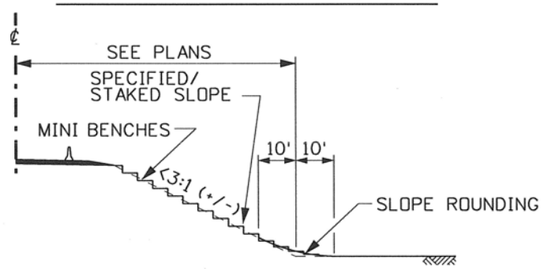

FILL SLOPES - STEEPER THAN 3:1

(SEE NOTE NO. 3)

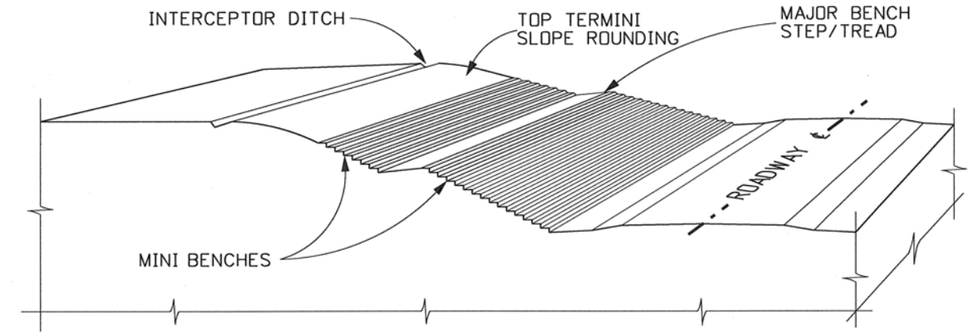

PERSPECTIVE VIEW - ROADSIDE SLOPE TREATMENT

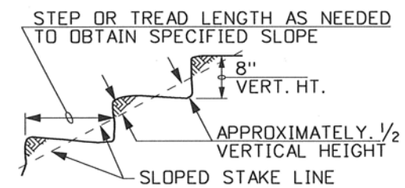

SERRATION DETAIL

(SEE NOTE NOS. 2 & 6)

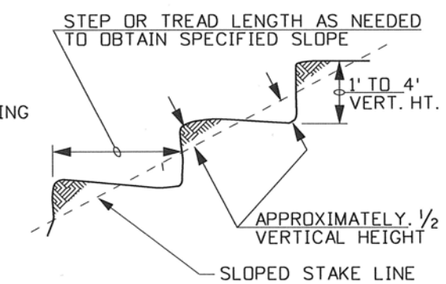

MINI BENCH DETAIL

(SEE NOTE NOS. 2 & 6)

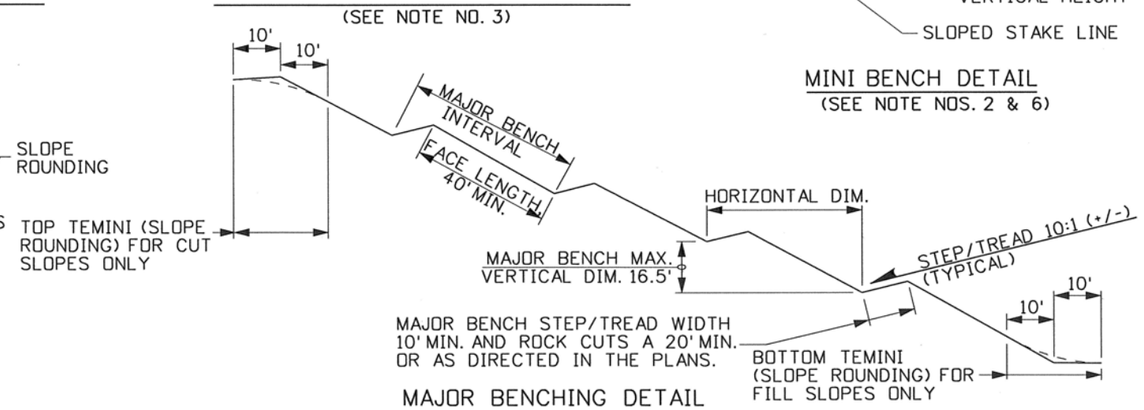

MAJOR BENCHING DETAIL

(SEE NOTE NOS. 3 & 6)

NOTES

1. SERRATION VERTICAL DIMENSIONS ARE APPROXIMATELY 1 FOOT OR LESS. MINI BENCH VERTICAL DIMENSIONS ARE APPROXIMATELY 1 FOOT TO 4 FEET. MAJOR BENCH VERTICAL DIMENSIONS ARE GREATER THAN 4 FEET. THE FACE OF MAJOR BENCHING SHALL BE CONSTRUCTED AT THE SPECIFIED SLOPE.
2. CUT SLOPES STEEPER THAN 3:1 TO <2:1 SHALL HAVE SERRATING OR MINI BENCHING. CUT SLOPES OF 2:1 OR STEEPER AND FILL SLOPES OF 3:1 OR STEEPER SHALL HAVE MINI BENCHING. SERRATION AND MINI BENCHING IS OPTIONAL ON CUT AND FILL SLOPES OF 3:1 OR FLATTER.
3. MAJOR BENCHING IS REQUIRED ON RIPPABLE ROCK CUTS, CUT SLOPES 2:1 OR STEEPER, AND IS OPTIONAL ON FILL SLOPES STEEPER THAN 3:1. ONLY THE FACE PORTION OF MAJOR BENCHING MAY HAVE SERRATING OR MINI BENCHING. ALL MAJOR BENCHING CONFIGURATIONS SHALL BE DETAILED IN THE PLANS.
4. ALL SLOPE TREATMENT SHALL INCLUDE TOP AND/OR BOTTOM TERMINI. NORMALLY ALL TOP TERMINI FOR CUTS AND BOTTOM TERMINI FOR FILLS WILL CONSIST OF THE STANDARD SLOPE ROUNDING WITH TWO OR MORE 10 FOOT CHORDS. THE ROUNDING SHALL BE AS GENEROUS AS PRACTICAL.
5. SLOPES CONSTRUCTED WITH SERRATIONS, MINI BENCHING, AND/OR MAJOR BENCHING SHALL FOLLOW CONTOURS IN DRY ZONES OR A NON-EROSIVE LATERAL GRADE IN WET ZONES. FOR HELP DETERMINING A NON-EROSIVE LATERAL GRADE, CONTACT THE ITD MATERIALS SECTION.
6. INSTALLATION OF PERMANENT EROSION CONTROL SEDIMENT TRAPPING DEVICES ARE REQUIRED AT THE DRAINAGE OUTLET(S) OF SERRATIONS, MINI BENCHING, AND MAJOR BENCHING STEPS/TREADS WHICH ARE NOT ON A LATERAL OR FLAT GRADE. THE STEPS/TREADS ON ALL SLOPE TREATMENT APPLICATIONS SHALL DIRECT THE INITIAL RUNOFF INTO THE CUT/FILL.
7. WHERE ERODIBLE SOILS (SILT AND/OR CLAY WITH NO GRAVEL OR ROCK) ARE PRESENT, SLOPES SHALL BE LEFT SMOOTH AND COVERED WITH EROSION CONTROL BLANKETS AS REQUIRED ON ITD BEST MANAGERMENT PRACTICES.
8. WHEN INTERCEPTOR DITCHES ARE USED IN CONJUCTION WITH ROADSIDE SLOPE TREATMENT THE DIMENSIONS GIVEN IN THE "INTERCEPTOR DITCH DETAIL" SHALL BE USED (NOTE: INTERCEPTOR DITCH IS A STANDARD PAY ITEM). THE CONFIGURATION OF INTERCEPTOR DITCHES USED IN CONJUCTION WITH ROADSIDE TREATMENT DEVICES SHALL BE DETAILED ON THE PLANS.
9. NOT TO SCALE.

REVISIONS

NO.	DATE	BY	NO.	DATE	BY	NO.	DATE	BY
1	6-92	JR						
2	6-04	MSM						
3	6-05	MSM						
4	7-09	GAM						

SCALES SHOWN ARE FOR 11" X 17" PRINTS ONLY

CADD FILE NAME: a6__0709.dgn

DRAWING DATE: MAY, 1990

IDAHO TRANSPORTATION DEPARTMENT

BOISE IDAHO

ASSISTANT CHIEF ENGINEER (DEVELOPMENT)

CHIEF ENGINEER

STANDARD DRAWING

TYPICAL ROADSIDE SLOPE TREATMENT

English

STANDARD DRAWING NO. A-6

SHEET 1 OF 1

PROFESSIONAL ENGINEER REGISTERED 6506 7-30-09 STATE OF IDAHO TED E. MASON

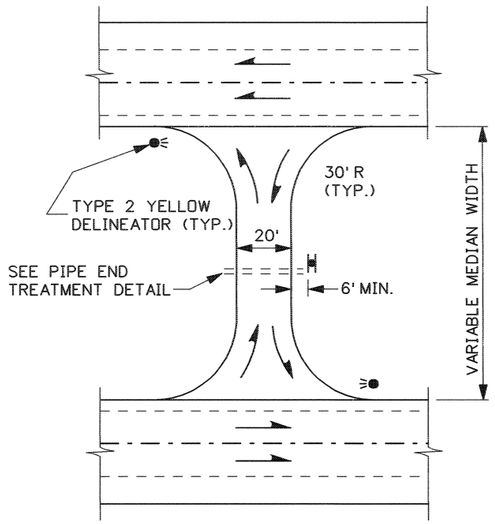

CROSSOVER TYPE A

(DUAL ACCESS)

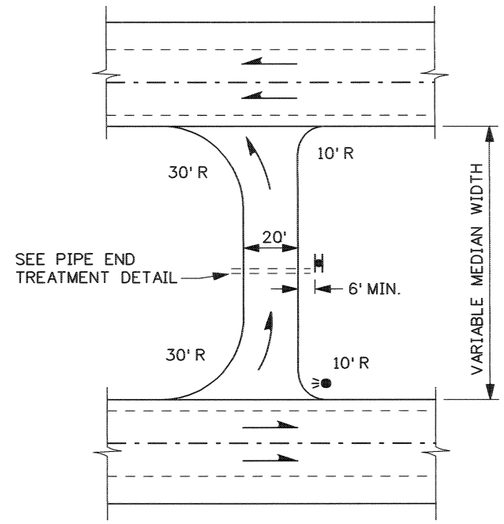

CROSSOVER TYPE B

(SINGLE ACCESS)

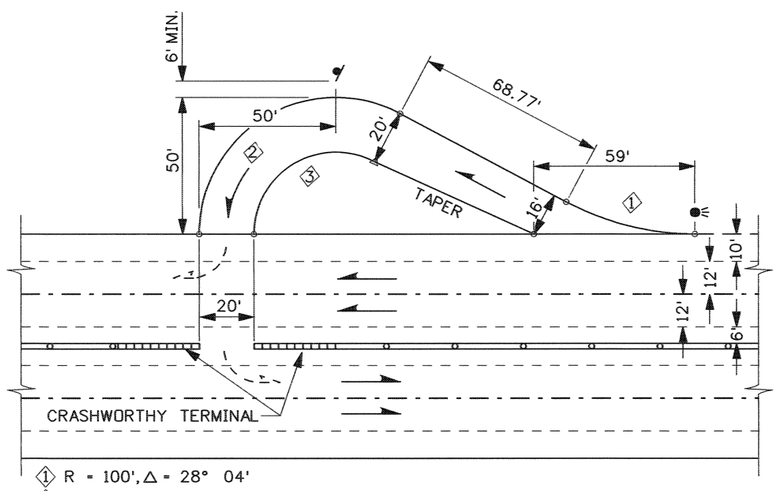

CROSSOVER TYPE C

(NARROW MEDIAN)

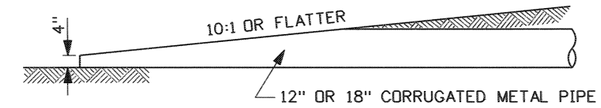

PIPE END TREATMENT

NOTES

1. THE FOLLOWING CRITERIA SHALL BE USED IN LOCATING MEDIAN CROSSOVERS:
   A. MEDIAN CROSSOVERS MAY BE LOCATED AT INTERCHANGES, REST AREAS, AND PORTS OF ENTRY WHEN NECESSARY TO ACCOMMODATE MAINTENANCE EQUIPMENT.
   B. MEDIAN CROSSOVERS SHOULD NOT BE LOCATED BETWEEN INTERCHANGES SPACED LESS THAN 5 MILES APART AND SHOULD NOT BE SPACED AT INTERVALS CLOSER THAN 3 TO 4 MILES.
   C. MEDIAN CROSSOVERS SHOULD BE AVOIDED IN URBAN AREAS WHERE THE CLOSE SPACING OF INTERCHANGES ALLOWS AMPLE TURNING OPPORTUNITIES.
   D. MEDIAN CROSSOVERS SHOULD NOT BE LOCATED CLOSER THAN 1500 FEET FROM THE END OF A SPEED-CHANGE TAPER OF A RAMP, OR ANY STRUCTURE THAT CROSSES OVER THE FREEWAY.
   E. MEDIAN CROSSOVERS SHALL BE LOCATED WHERE ABOVE-MINIMUM STOPPING SIGHT DISTANCE EXISTS, AND PREFERABLY WILL NOT BE LOCATED ON CURVES REQUIRING SUPERELEVATION.
2. IN AREAS WHERE THE MEDIAN IS LESS THAN 68 FEET BETWEEN SHOULDERS, A MEDIAN CROSSOVER TYPE C MAY BE PROVIDED. IT MAY BE CONSTRUCTED IN CONJUNCTION WITH A SINGLE OR DUAL ACCESS CROSSOVER AS CONDITIONS PERMIT.
3. A MEDIAN CROSSOVER TYPE B SHOULD BE CONSTRUCTED TO SERVICE AUTHORIZED VEHICLES TRAVELING IN ONE DIRECTION. THIS TYPE IS USED NEAR INTERCHANGES, REST AREAS, AND PORTS OF ENTRY. A MEDIAN CROSSOVER TYPE A SHALL BE CONSTRUCTED TO SERVICE AUTHORIZED VEHICLES TRAVELING IN EITHER DIRECTION.
4. THE CROSSOVER SHOULD BE DEPRESSED BELOW SHOULDER LEVEL TO BE INCONSPICUOUS TO TRAFFIC. THE SURFACE MATERIAL SHALL BE A ¾" AGGREGATE BASE WITH A MINIMUM 6" COMPACTED DEPTH.
5. THE MEDIAN CROSSOVER GRADE SHALL BE -2% FROM THE EDGE OF THE SHOULDER AND BE CARRIED AS FAR AS THE TERRAIN WILL PERMIT. CROSSOVER TYPE C WILL BE GRADED TO BLEND WITH THE EXISTING FREEWAY SHOULDER.
6. THE CROSSOVER SIDE SLOPE SHALL BE 10:1 OR FLATTER. SLOPES SHALL BE BLENDED SMOOTHLY AROUND EACH RADIUS TO AVOID CREATING A DITCH SECTION NEXT TO THE MAINLINE ROADWAY.
7. WHERE MEDIAN BARRIERS ARE EMPLOYED, EACH END OF THE BARRIER AT THE OPENING SHALL HAVE A CRASHWORTHY TERMINAL.
8. DRAINAGE REQUIRING A 12" OR 18" DIAMETER PIPE SHALL BE TAPERED AS SHOWN. DRAINAGE REQUIRING A LARGER PIPE SHALL UTILIZE A DROP INLET AND BE DRAINED ACROSS THE INTERSTATE IF POSSIBLE. IF THE TERRAIN DOES NOT PERMIT CROSS-DRAINAGE, A TRAVERSABLE TAPERED INLET-OUTLET DESIGN SHOULD BE USED. THE DESIGN MUST NOT EXCEED A SLOPE OF 10:1 AND MUST BE TRAVERSABLE TO AN UNCONTROLLED VEHICLE.
9. A MEDIAN CROSSOVER SIGN (R8-8) WILL BE LOCATED IN THE CENTER OF THE MEDIAN AT A MINIMUM 6 FEET FROM THE EDGE OF THE CROSSOVER. TWO SIGNS BACK TO BACK SHALL BE MOUNTED ON A BREAKAWAY POST FACING THE MAIN ROUTE TRAFFIC WITH A 7 FOOT CLEARANCE ABOVE THE CROSSOVER SURFACE. ON "CROSSOVER TYPE C" A SINGLE SIGN FACING THE MAIN LINE TRAFFIC SHALL BE MOUNTED. THE BREAKAWAY FEATURE ON THE POST SHALL BE CONSTRUCTED TO ACCOMMODATE THE MAIN ROUTE TRAFFIC.
10. A TYPE 2 YELLOW DELINEATOR SHALL BE PLACED FOR ONE OR BOTH DIRECTIONS OF TRAFFIC FLOW.
11. NOT TO SCALE.

REVISIONS

NO.	DATE	BY	NO.	DATE	BY	NO.	DATE	BY
1	5-90	GB	6	3-05	MSM			
2	7-90	GB						
3	4-92	MSM						
4	6-97	HEB						
5	1-00	HEB						

SCALES SHOWN ARE FOR 11" X 17" PRINTS ONLY

CADD FILE NAME a7__0305.std

DRWG. ORIG. DATE: MAY, 1988

IDAHO TRANSPORTATION DEPARTMENT

BOISE IDAHO

ASSISTANT CHIEF ENGINEER (DEVELOPMENT)

CHIEF ENGINEER

STANDARD DRAWING

MEDIAN CROSSOVERS

English

STANDARD DRWG. NO.

A-7

SHEET 1 OF 1

PROFESSIONAL ENGINEER * LAND SURVEYOR REGISTERED 2240 3/8/05 STATE OF IDAHO MILFORD MILLER

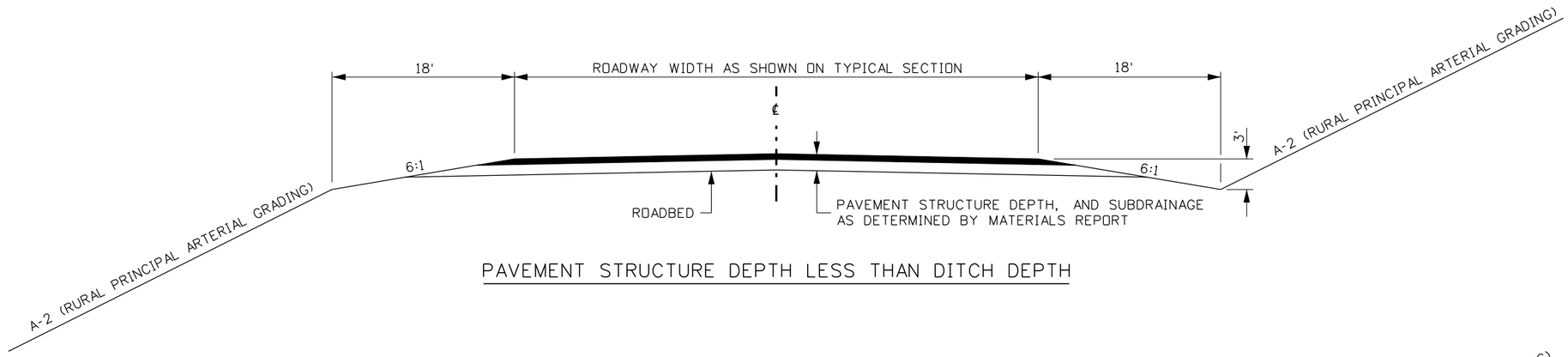

PAVEMENT STRUCTURE DEPTH LESS THAN DITCH DEPTH

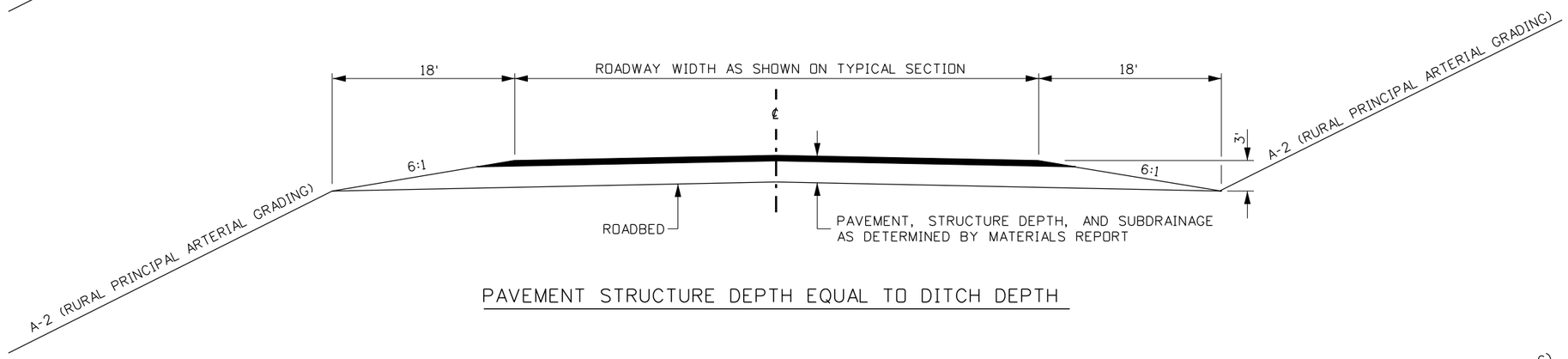

PAVEMENT STRUCTURE DEPTH EQUAL TO DITCH DEPTH

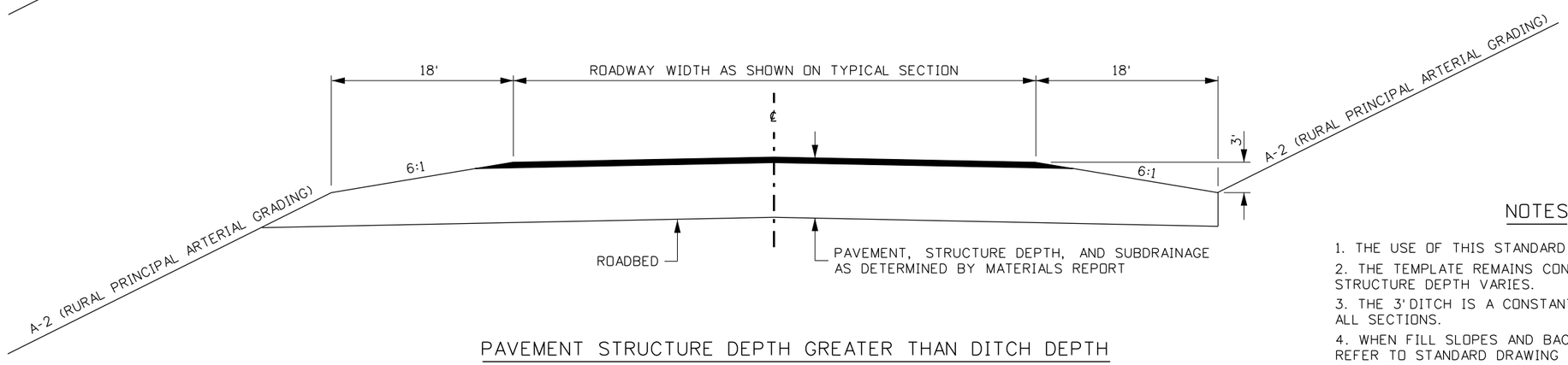

PAVEMENT STRUCTURE DEPTH GREATER THAN DITCH DEPTH

NOTES

1. THE USE OF THIS STANDARD DRAWING IS OPTIONAL.
2. THE TEMPLATE REMAINS CONSTANT AS THE PAVEMENT STRUCTURE DEPTH VARIES.
3. THE 3' DITCH IS A CONSTANT DEPTH TO BE USED ON ALL SECTIONS.
4. WHEN FILL SLOPES AND BACKSLOPES ARE MODIFIED REFER TO STANDARD DRAWING A-2 (RURAL PRINCIPAL GRADING) TO FIT INDIVIDUAL CONDITIONS.

HIGHWAYS PROGRAM OVERSIGHT ENGINEER

ORIGINAL STORED AT: ITD, Headquarters 3311 West State Boise, Idaho

ORIGINAL SIGNED BY: RYAN SCOT CARNIE
DATE ORIGINAL SIGNED: AUGUST 26, 2011

REVISIONS								
NO.	DATE	BY	NO.	DATE	BY	NO.	DATE	BY
1	1-00	MSM						
2	3-05	MSM						
3	7-09	GAM						
4	8-11	RSC						

SCALES SHOWN ARE FOR 11" X 17" PRINTS ONLY

CADD FILE NAME a8__0811.std

DRWG. ORIG. DATE: SEPTEMBER, 1994

IDAHO TRANSPORTATION DEPARTMENT

BOISE IDAHO

ORIGINAL SIGNED BY: LOREN THOMAS
HIGHWAYS PROGRAM OVERSIGHT ENGINEER
ORIGINAL SIGNED BY: TOM COLE
CHIEF ENGINEER

STANDARD DRAWING

STANDARD TEMPLATE

English

STANDARD DRWG. NO.

A-8

SHEET 1 OF 1

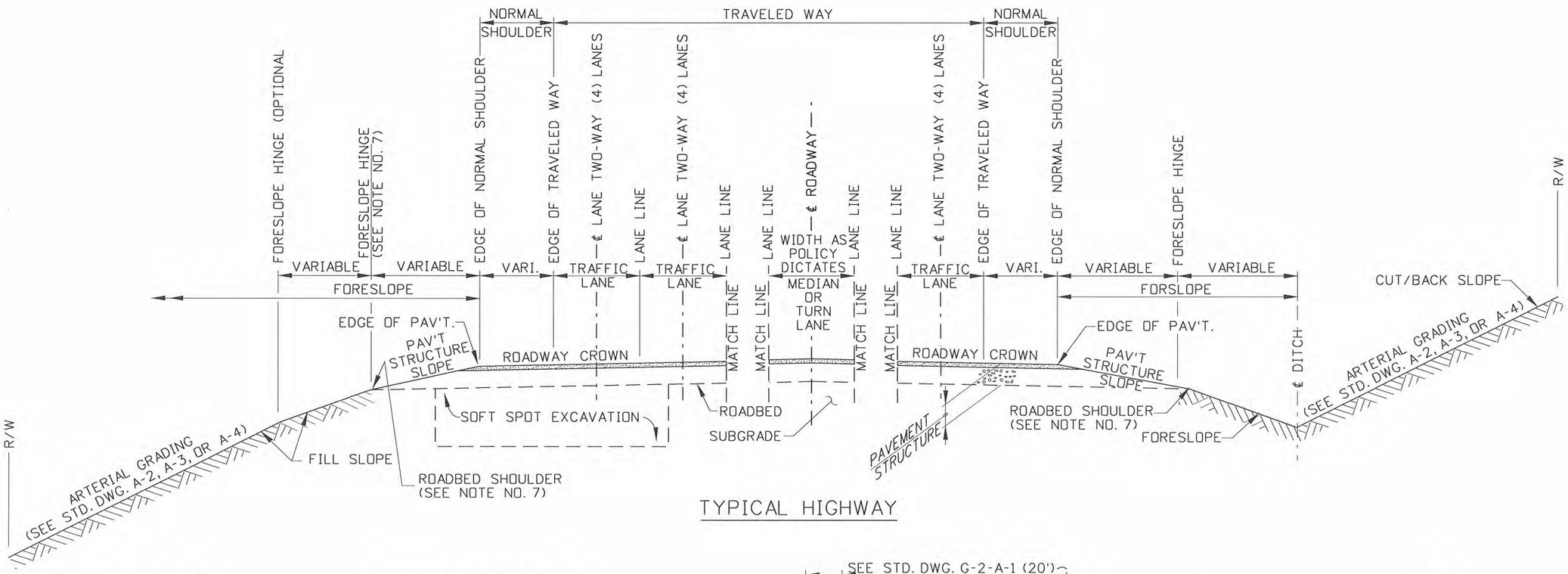

TYPICAL HIGHWAY

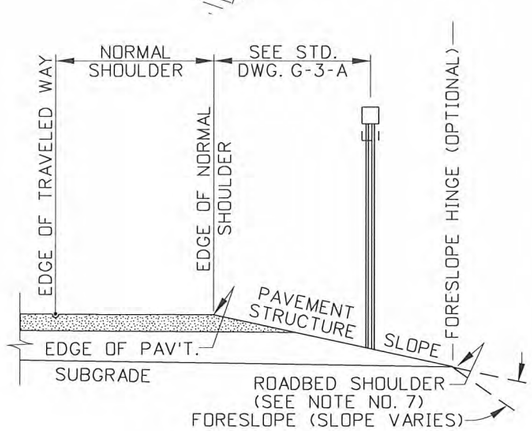

DELINEATOR INSTALLATION

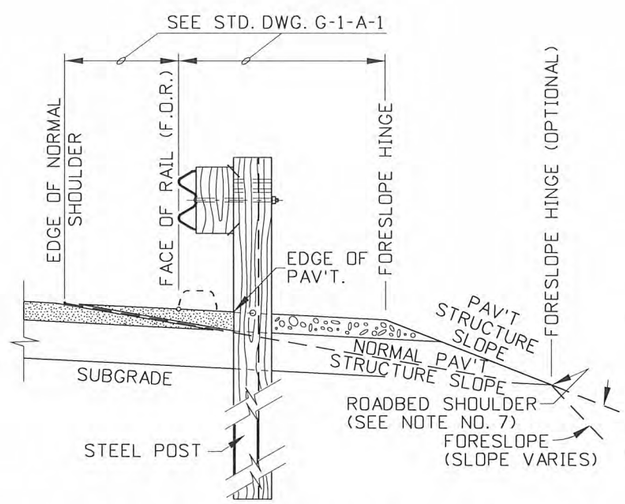

STANDARD W-BEAM INSTALLATION (ASPHALT)

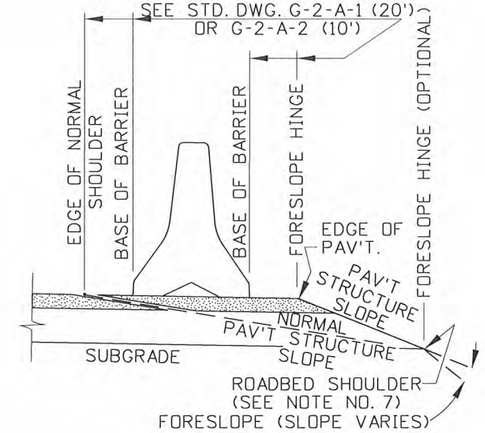

CONCRETE BARRIER INSTALLATION

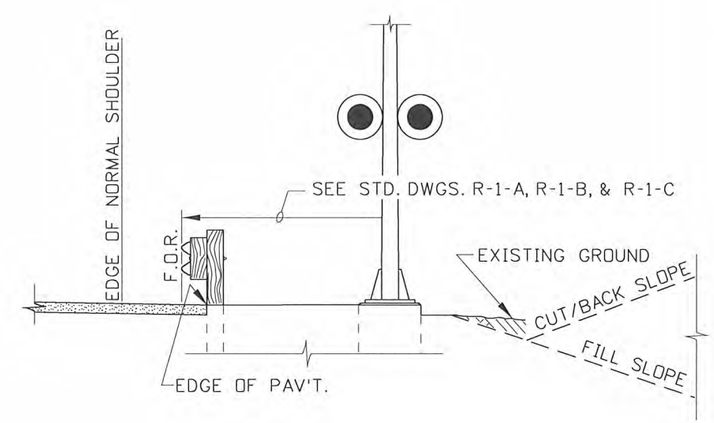

RAILROAD INSTALLATION WITH GUARDRAIL

STANDARD W-BEAM INSTALLATION (ASPHALT)

REVISIONS								
NO.	DATE	BY	NO.	DATE	BY	NO.	DATE	BY
1	4-04	RL						
2	6-05	MSM						
3	9-10	PLR						

SCALES SHOWN ARE FOR 11" X 17" PRINTS ONLY

CADD FILE NAME: a9__1010.std

DRAWING DATE: JUNE, 2003

IDAHO TRANSPORTATION DEPARTMENT

BOISE IDAHO

ASSISTANT CHIEF ENGINEER (DEVELOPMENT)

CHIEF ENGINEER

STANDARD DRAWING

ITD ROADWAY NOMENCLATURE LOCATION & EXAMPLES

REQUIRES SHEETS 2, 3, & 4

English

STANDARD DRAWING NO. A-9

SHEET 1 OF 4

PROFESSIONAL ENGINEER REGISTERED 6506 10/26/2010 STATE OF IDAHO TED E. MASON

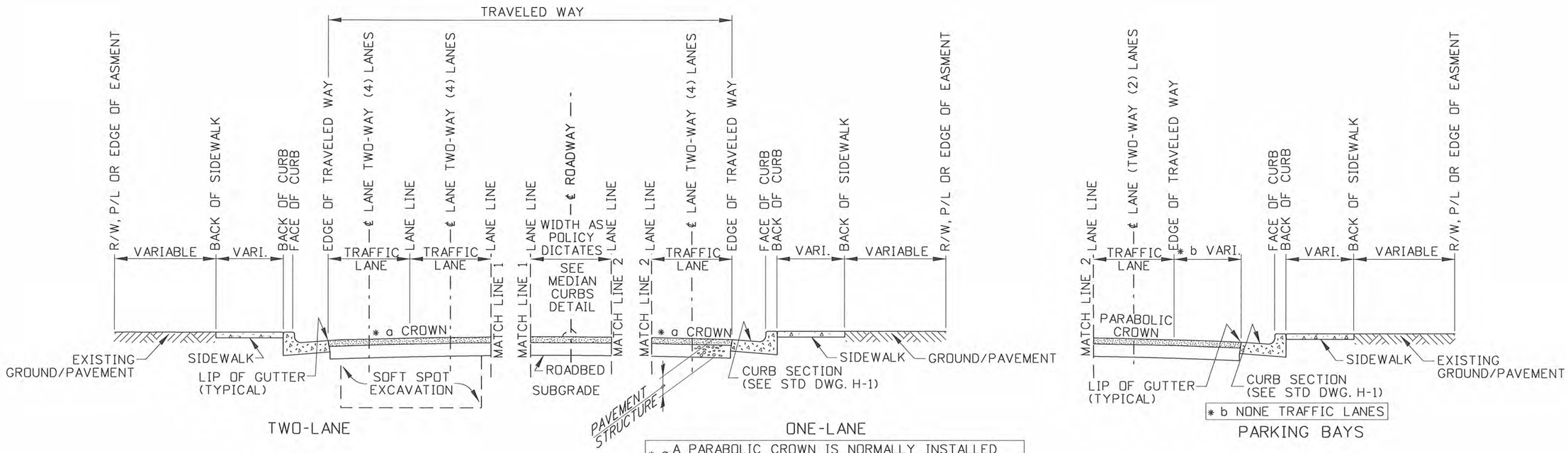

REVISIONS								
NO.	DATE	BY	NO.	DATE	BY	NO.	DATE	BY
1	4-04	RL						
2	6-05	MSM						
3	9-10	PLR						

SCALES SHOWN ARE FOR 11" X 17" PRINTS ONLY

CADD FILE NAME: o9__1010.std

DRAWING DATE: JUNE, 2003

IDAHO TRANSPORTATION DEPARTMENT

BOISE IDAHO

ASSISTANT CHIEF ENGINEER (DEVELOPMENT)

CHIEF ENGINEER

STANDARD DRAWING

ITD ROADWAY NOMENCLATURE LOCATION & EXAMPLES

REQUIRES SHEETS 1, 3, & 4

English

STANDARD DRAWING NO.

A-9

SHEET 2 OF 4

PROFESSIONAL ENGINEER REGISTERED 6506 10/26/2010 STATE OF IDAHO TED E. MASON

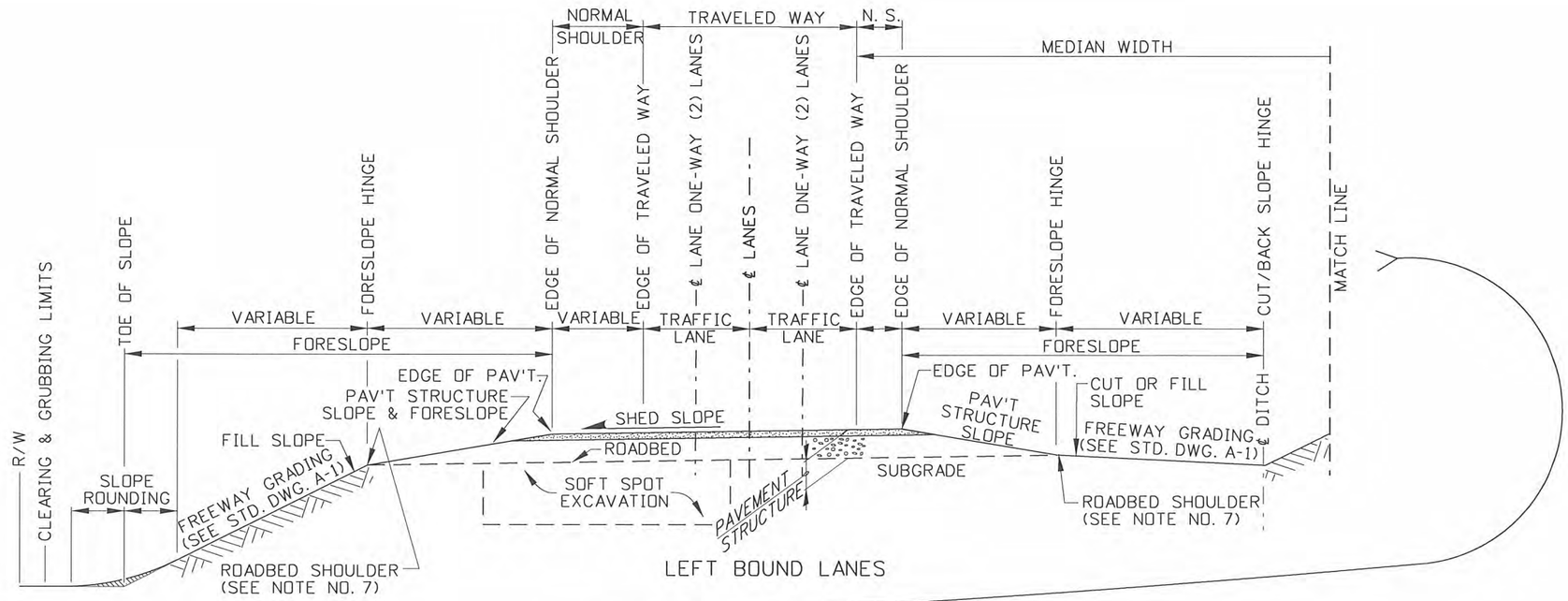

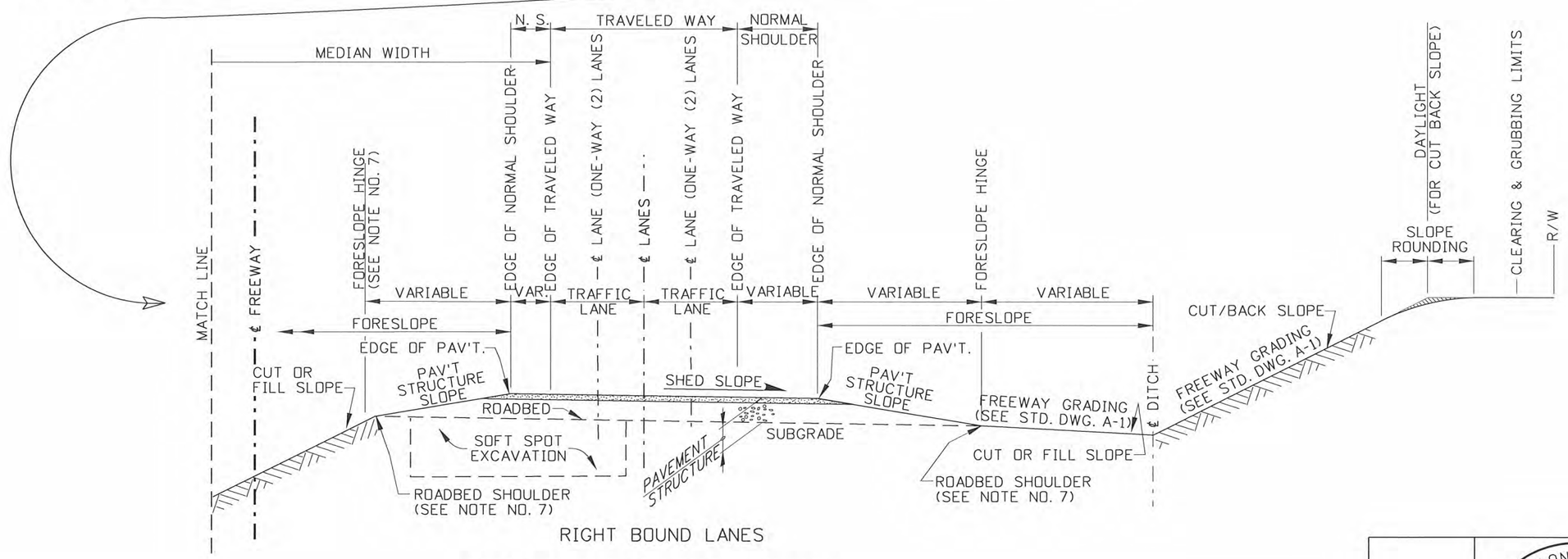

TYPICAL MULTI-LANE HIGHWAY

REVISIONS								
NO.	DATE	BY	NO.	DATE	BY	NO.	DATE	BY
1	4-04	RL						
2	6-05	MSM						
3	9-10	PLR						

SCALES SHOWN ARE FOR 11" X 17" PRINTS ONLY

CADD FILE NAME: a9__1010.std

DRAWING DATE: JUNE, 2003

IDAHO TRANSPORTATION DEPARTMENT

BOISE IDAHO

ASSISTANT CHIEF ENGINEER (DEVELOPMENT)

CHIEF ENGINEER

STANDARD DRAWING

ITD ROADWAY NOMENCLATURE LOCATION & EXAMPLES

REQUIRES SHEETS 1, 2, & 4

English

STANDARD DRAWING NO. A-9

SHEET 3 OF 4

PROFESSIONAL ENGINEER REGISTERED 6506 10/26/2010 STATE OF IDAHO TED E. MASON

DEFINITIONS

* THESE TERMS ARE NOT NORMALLY USED ON STANDARD DRAWINGS.

BACK OF CURB: THE BEGINNING OF SIDEWALK OR UTILITY STRIP. ALSO USED FOR SURVEY CONTROL LINE.

*PAVEMENT STRUCTURE: THE STRUCTURE THAT IS CONSTRUCTED ON THE ROADBED AND TYPICALLY INCLUDES SURFACING, BASE COURSES, AND GRANULAR SUBBASE.

PAVEMENT STRUCTURE SLOPE: THE PRIMARY PORTION OF THE FORESLOPE, BEGINNING AT THE EDGE OF PAVEMENT AND ENDING AT THE ROADBED SHOULDER.

BASE OF BARRIER: WHERE THE BASE OF CONCRETE BARRIER TOUCHES THE PAVEMENT (THE POINTS OF MEASUREMENT).

*CLEAR ZONE: THE ROADSIDE PORTION THAT IS BEYOND THE TRAVELED WAY AND IS AVAILABLE FOR USE BY ERRANT VEHICLES.

*CLEARING & GRUBBING LIMITS: AN AREA WITHIN THE ROADWAY CORRIDOR THAT ORGANIC MATTER IS REMOVED PRIOR TO PLACEMENT OF EMBANKMENT OR REMOVAL OF EXCAVATION.

CENTERLINE (C/L): THE CENTERLINE OF ROADWAY, TRAFFIC LANE(S), OR FREEWAY. ALSO REFERRED TO AS THE TRAFFIC MARKINGS THAT DELINEATE THE DIVISION OF OPPOSING TRAFFIC (SEE CONTROL LINE).

CONTROL LINE: A SURVEY LINE FROM WHICH ROADWAY DIMENSIONS ARE MEASURED (NOT NECESSARILY THE SAME AS THE ROADWAY CENTERLINE.

CUT/BACK SLOPE: AN ASCENDING SLOPE FROM THE EDGE OF FORESLOPE OR BOTTOM OF DITCH TO DAYLIGHT.

EDGE OF NORMAL SHOULDER: WHERE THE NORMAL SHOULDER ENDS.

EDGE OF PAVEMENT: THE EDGE OF THE TRAVELABLE PAVEMENT, WHERE THE PAVEMENT STRUCTURE SLOPE BREAKS DOWN FROM THE ROADWAY WIDTH.

FACE OF RAIL (F.O.R.): A VERTICAL LINE ALONG THE INNER MOST PART OF METAL GUARDRAIL THAT FACES THE ROADWAY.

FILL SLOPE: A DESCENDING SLOPE OF COMPACTED MATERIAL FROM THE EDGE OF ROADBED TO TOE OF SLOPE.

FORESLOPE: ANY DESCENDING SLOPE OR COMBINATION OF SLOPES FROM THE EDGE OF PAVEMENT TO THE BEGINNING OF A CUT/BACK SLOPE, BOTTOM OF DITCH, OR THE TOE OF SLOPE OF AN ADJACENT ROADWAY.

HIGHWAY: THE ENTIRE RIGHT-OF-WAY.

HINGE (POINT): A BREAKING POINT OF THE ROADWAY CROWN, PARABOLIC CROWN, PAVEMENT STRUCTURE SLOPE, FORESLOPE, FILL SLOPE, OR CUT SLOPE.

LANE LINE: EDGE OF A TRAFFIC LANE USUALLY DELINEATED BY A TRAFFIC MARKING LINE.

LIP OF GUTTER (L.O.G.): THE END OF THE CURB/GUTTER SECTION AND BEGINNING OF THE ROADWAY PAVEMENT. NORMALLY, THE CONTROL LINE WHEN A PARABOLIC CROWN IS INSTALLED.

MEDIAN: THE PORTION OF A DIVIDED HIGHWAY OR FREEWAY THAT SEPARATES THE TRAVELED WAYS FOR TRAFFIC IN OPPOSITE DIRECTIONS.

*MEDIAN WIDTH: THE WIDTH OF THE AREA BETWEEN THE TRAVELED WAYS OF TWO ROADWAYS.

NORMAL SHOULDER: THAT PORTION OF THE PAVED ROADWAY SURFACE OUTSIDE OF THE TRAVELED WAY.

PARABOLIC CROWN: A CROSS-SECTION FINISH GRADE THAT CONTAINS A PARABOLIC CURVE BETWEEN CURB & GUTTERS.

PLANS: APPROVED DRAWINGS OR REPRODUCTION OF APPROVED DRAWINGS THAT THE PROPOSED ROADWAY IS TO BE LET FOR CONTRACT AND CONSTRUCTED.

*PROFILE GRADE: A SERIES OF TANGENT GRADE LINES CONNECTED BY VERTICAL CURVES. IT IS TYPICALY PLACED ALONG THE ROADWAY CENTERLINE OF UNDIVIDED FACILITIES AND AT THE RIGHT/LEFT LIP OF GUTTER FOR PAROBOLIC CONTROL IN URBAN AREAS.

*ROADSIDE: THE AREA ADJOINING THE OUTER EDGE OF THE ROADWAY WITHIN THE RIGHT-OF-WAY. AREAS (ALSO CALLED MEDIAN) BETWEEN THE ROADWAYS OF A DIVIDED HIGHWAY SHALL ALSO BE CONSIDERED ROADSIDE.

ROADWAY BALLAST: COMBINED PAVEMENT STRUCTURE AND EMBANKMENT (FILL) MATERIAL, INCLUDING SHOULDER MATERIAL OUTSIDE THE ROADWAY PRISM.

*ROADWAY CORRIDOR: THAT PORTION OF THE HIGHWAY WITHIN THE LIMITS OF CONSTRUCTION.

ROADWAY: SEE ROADWAY CORRIDOR.

ROADWAY CROWN: A CROSS-SECTION FINISH GRADE THAT CONTAINS A PERCENT GRADE OR SLOPE (SHOWN ON THE TYPICAL SECTION).

*ROADWAY PRISM: THE ENGINEERED/STRUCTURAL PORTION OF THE HIGHWAY. INCLUDES THE PAVEMENT STRUCTURE PLUS THE AREA BETWEEN THE ROADBED SHOULDERS, OR BACK OF CURB, EXTENDING DOWNWARD AND OUTWARD AT THE SLOPE OF 1.5 H TO 1.0 V TO THE INTERCEPT OF NATURAL GROUND, REMOVAL LIMIT, OR SLOPE OF EMBANKMENT KEYING BENCHES. INCLUDED ELEMENTS ARE ROADWAY PAVEMENT STRUCTURE, EMBANKMENT FILL, FOUNDATIONS FOR EMBANKMENT, AND SOFT SPOT EXCAVATION/BACKFILL. EMBANKMENT FILL OUTSIDE OF THE 1.5*H TO 1.0*V SLOPE IS NOT CONSIDERED PART OF THE ROADWAY PRISM (SEE DETAIL).

*ROADWAY SHOULDER: ANY TRAVELABLE PORTION OF THE ROADWAY OUTSIDE OF THE TRAVELED WAY.

*ROADWAY WIDTH: FROM EDGE OF PAVEMENT TO EDGE OF PAVEMENT.

SHED SECTION: A CROSS-SECTION FINISH GRADE THAT CONTAINS A SINGLE PERCENT GRADE OR SLOPE (SHOWN ON THE TYPICAL SECTION).

SHY LINE OFFSET: THE DISTANCE FROM THE EDGE OF THE TRAVELED WAY, BEYOND WHICH A ROADSIDE OBJECT WILL NOT BE PERCEIVED AS AN OBSTACLE AND RESULT IN A MOTORIST'S REDUCING SPEED OR CHANGING VEHICLE POSITION ON THE ROADWAY (SEE 2006 AASHTO ROADSIDE DESIGN GUIDE, TABLE 5.5)

SHOULDER: THE PORTION OF THE ROADWAY CONTIGUOUS WITH THE TRAVELED WAY FOR THE ACCOMMODATION OF STOPPED VEHICLES,FOR EMERGENCY USE, AND FOR LATERAL SUPPORT OF BASE AND SURFACE COURSES (SEE NORMAL SHOULDER).

SLOPE: THE RELATIVE STEEPNESS OF THE TERRAIN EXPRESSED AS A RATIO OR PERCENTAGE,

SLOPE ROUNDING: THE INTRODUCTION OF A VERTICAL CURVE BETWEEN TWO SLOPES TO MINIMIZE THE ABRUPT SLOPE CHANGE.

ROADBED: THE TOP OF SUBGRADE, UPON WHICH THE PAVEMENT STRUCTURE, CURBS, SIDEWALKS, MEDIAN AND OTHER INCIDENTAL FACILITIES ARE CONSTRUCTED.

ROADBED SHOULDER: EDGE OF ROADBED, WHERE THE BOTTOM OF THE ROADWAY PAVEMENT STRUCTURE MEETS DAY LIGHT AT THE FORESLOPE OR FILL SLOPE.

SOFT SPOT EXCAVATION: EXCAVATION BELOW OR BEYOND THE NORMAL ROADWAY PRISM USUALLY DUE TO SUBGRADE MATERIAL THAT WILL NOT SUPPORT A NORMAL ROADWAY BALLAST. SMALL QUANTITIES AT SPECIFIC LOCATIONS THAT ARE USUALLY NOT SHOWN ON THE PLANS.

TOE OF SLOPE: WHERE THE BOTTOM OF A SLOPE (USUALLY A FILL SLOPE) INTERSECTS THE NATURAL GROUND OR BOTTOM OF DITCH.

*TRAFFIC LANE: THE PORTION OF THE TRAVELED WAY FOR THE MOVEMENT A SINGLE LINE OF VEHICLES.

TRAVELED WAY: THAT PORTION OF THE ROADWAY CORRIDOR THAT IS DESIGNATED FOR VEHICULAR TRAVEL NOT INCLUDING THE ROADWAY SHOULDERS.

TYPICAL SECTION: AN ELEVATION DETAIL IN THE PLANS WHICH IS A ROADWAY CROSS-SECTION THAT INCLUDES A TRAVERSE FINISH GRADE PROFILE, THE PAVEMENT STRUCTURE REQUIREMENTS AND BASIC ROADWAY CONSTRUCTION DIMENSIONS.

*URBAN STREET: A PAVED STREET WITH A PARABOLIC CROWN CONNECTING CURB AND GUTTER EDGES.

THE ROADWAY PRISM IS REPRESENTED BY THE CROSS-HATCHED AREA THAT INCLUDES PAVEMENT STRUCTURE AND SUBGRADE, BUT NOT NATURAL GROUND (NOTE: TOP SOIL AND ORGANIC MATTER REMOVED).

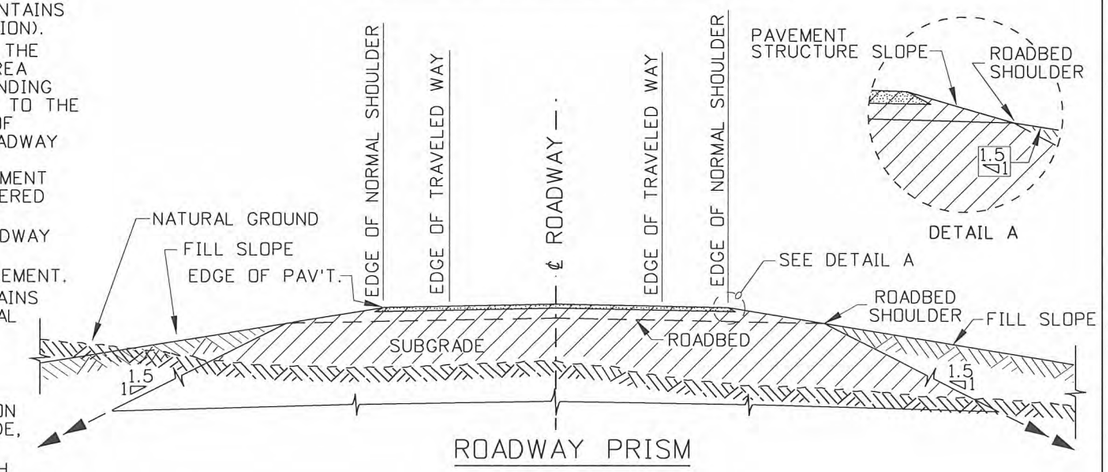

NOTES

1. THE ITEMS AND TERMS SHOWN ARE INTENDED TO BE GENERAL EXAMPLES AND SHALL NOT HAVE PRECEDENCE OF ANY DEFINITION CONTAINED IN THE PLANS OR STANDARD SPECIFICATIONS. SOME DEFINITIONS AND USAGE HEREIN MAY BE UNIQUE TO THE (ITD) IDAHO TRANSPORTATION DEPARTMENT.

2. ADDITIONAL DEFINITION OF TERMS CAN BE FOUND IN THE AASHTO ROADSIDE DESIGN GUIDE AND THE ITD STANDARD SPECIFICATIONS.

3. REFER TO STANDARD DRAWING A-1 WHEN USING FREEWAY TERMS.

4. REFER TO STANDARD DRAWING A-2, A-3, & A-4 WHEN USING MAJOR AND/OR MINOR ARTERIAL TERMS.

5. REFER TO STANDARD DRAWING A-10 WHEN INSTALLING A PARABOLIC CROWN.

6. REFER TO STANDARD DRAWING G-1-A-1 WHEN INSTALLING A METAL GUARDRAIL.

7. REFER TO STANDARD DRAWING G-2-A-1 AND OR G-2-A-2 WHEN INSTALLING STANDARD CONCRETE BARRIER.

8. REFER TO THE APPROPRIATE STANDARD DRAWING, R-1-A, R-1-B, R-1-C, OR R-2 WHEN A RAILROAD CROSSING IS INVOLVED.

9. WHEN CURB OR CURB & GUTTER IS USED REFER TO STANDARD DRAWING H-1.

10. A FORESLOPE HINGE POINT IS NOT NECESSARILY AT THE EDGE OF ROADBED (SEE DEFINITION OF FORESLOPE).

REVISIONS

NO.	DATE	BY	NO.	DATE	BY	NO.	DATE	BY
1	4-04	RL						
2	6-05	MSM						
3	9-10	PLR						

SCALES SHOWN ARE FOR 11" X 17" PRINTS ONLY

CADD FILE NAME: o9__1010.std

DRAWING DATE: JUNE, 2003

IDAHO TRANSPORTATION DEPARTMENT

BOISE IDAHO

ASSISTANT CHIEF ENGINEER (DEVELOPMENT)

CHIEF ENGINEER

STANDARD DRAWING

ITD ROADWAY NOMENCLATURE LOCATION & EXAMPLES

REQUIRES SHEETS 1, 2, & 3

English

STANDARD DRAWING NO.

A-9

SHEET 4 OF 4

PROFESSIONAL ENGINEER REGISTERED 6506 10/26/2010 STATE OF IDAHO TED E. MASON

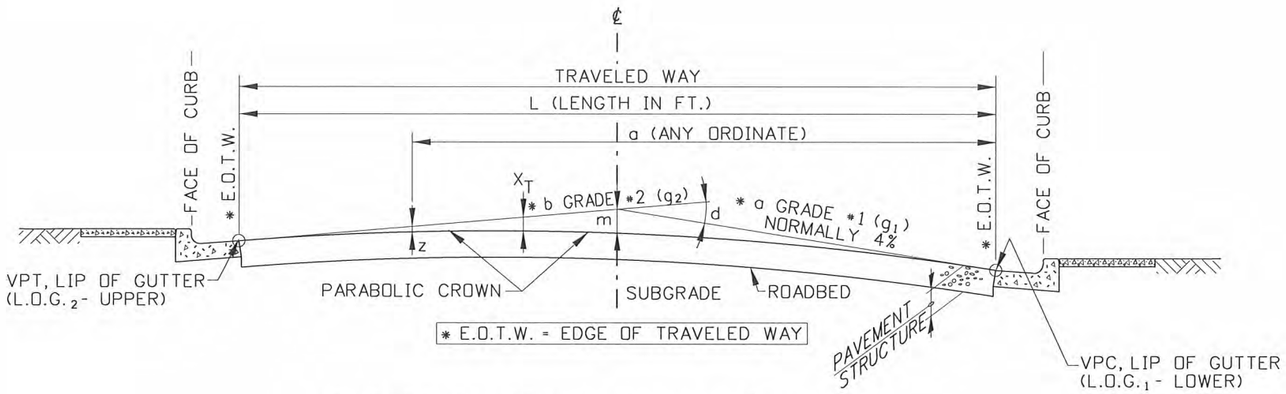

PARABOLIC CROWN FORMULAS LAYOUT

(SEE FORMULA TABLE)

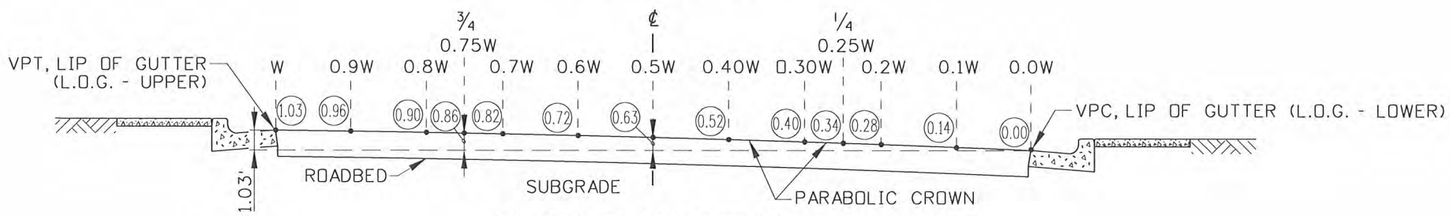

EXAMPLE ELEVATIONS

NOMOGRAPH EXAMPLE

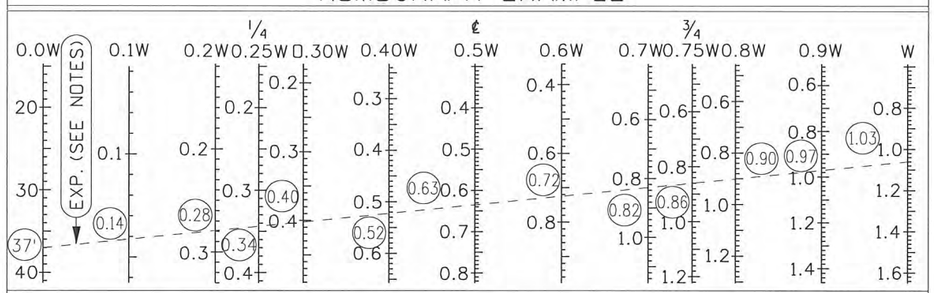

EXAMPLE: AT A GIVEN CROSS-SECTION, ROADWAY WIDTH BETWEEN CURBS IS 40 FT., GUTTER WIDTHS ARE 18 IN., AND THE LIP OF THE LEFT GUTTER IS 1.03 FT HIGHER. WITH STRAIGHT-EDGE (SEE DASHED LINE) AT 37 FT. ON LEFT SCALE AND 1.03 FT. ON RIGHT SCALE, READ AS FOLLOWS:

THE FINISHED ROADWAY SURFACE IS HIGHER THAN THE LIP OF THE RIGHT (LOWER) GUTTER BY 0.14 FT AT 3.7 FT. (OR 0.1 OF WIDTH) FROM LIP OF RIGHT GUTTER, 0.28 FT. AT 7.4 FT., 0.34 FT. AT 9.25 FT. (QUARTER POINT), 0.40 AT 11.1 FT., 0.52 FT. AT 14.8 FT., 0.63 FT. AT 18.5 FT. (*) 0.72 FT. AT 22.2 FT., 0.82 FT. AT 25.9 FT., 0.86 FT. AT 27.75 FT., (THREE QUARTERS POINT), 0.90 FT. AT 29.6 FT., 0.97 FT. AT 33.3 FT., AND 1.03 FT. AT 37 FT. (LIP OF LEFT GUTTER). DISTANCES OUT FROM LOWER GUTTER MAY BE ROUNDED TO THE NEAREST FOOT WITHOUT APPRECIABLE ERROR.

PARABOLIC CROWN FORMULAS

GRADE #1	$g_1 = .04$ (4% NORMALLY)
GRADE #2	$g_2 = \left[\left(L.O.G._2 - L.O.G._1\right) - \left(\frac{L}{2}\right) g_1 \Big/ \frac{L}{2}\right]$
GRADE DIFFERENCE	$d = (g_2 - g_1)$
MIDDLE ORDINATE	$m = \frac{dL}{8}$
COEFFICIENT	$k = \frac{L}{d}$
ANY ORDINATE	$z = \frac{ma^2}{(L/2)^2}$ OR $z = \frac{da^2}{2L}$
HIGH POINT	$X_T = g_1 k$
ELEVATION AT PT.	$E = [a(g_1) - z] + L.O.G._1$

DEFINITION OF TERMS

g_1	RATE OF GRADE #1 (HUNDREDTH'S/FT.)
g_2	RATE OF GRADE #2 (HUNDREDTH'S/FT.)
L.O.G.$_1$	LIP OF GUTTER ELEV. (LOW SIDE)
L.O.G.$_2$	LIP OF GUTTER ELEV. (HIGH SIDE)
E	ELEVATION AT ANY POINT ON THE PARABOLIC CROWN
k	COEFFICIENT
X_T	HIGH POINT
m	MIDORDINATE (FT.)
z	ANY ORDINATE (FT.)
d	TOTAL CHANGE, ALGEBRAIC DIFFERENCE (ALWAYS "+") OF GRADES (PERCENT)
L	LENGTH OF PARABOLIC CURVE (FT.)
a	DISTANCE (FT.) FROM VPC TO ANY ORDINATE "z"
VPC	VERTICAL POINT OF CURVE (LOWER L.O.G.$_1$)
VPT	VERTICAL POINT OF TANGENT (UPPER L.O.G.$_2$)

NOTES

1. GENERAL INFORMATION: THE GRADE (g_1) TANGENT FROM THE LOWER LIP OF GUTTER (VPC) IS NORMALLY +4%. THE GRADE (g_2) FROM THE HIGHER LIP OF GUTTER (VPT) TO THE (VPI) IS CALCULATED (NOTE: THE GRADES MEET AT CENTERLINE).

2. OTHER METHODS: THE EXAMPLES SHOWN TO INSTALL A PARABOLIC CROWN (BY USING THE NOMOGRAPH OR CALCULATED USING THE FORMULAS) ARE THE IDAHO TRANSPORTATION's TRADITIONAL INSTALLATION METHODS, OTHER METHODS ARE PERMITTED PROVIDED A SOUND ENGINEERING PRACTICE IS EMPLOYED. ORDINARY CROWN OR SHED SECTIONS BETWEEN LIPS OF GUTTERS ARE NOT RECOMMENCED AND SHOULD ONLY BE USED WITH AN ENGINEER'S APPROVAL.

REVISIONS

NO.	DATE	BY	NO.	DATE	BY	NO.	DATE	BY
1	3-05	MSM						
2	9-10	PLR						

SCALES SHOWN ARE FOR 11" X 17" PRINTS ONLY

CADD FILE NAME: a10_1010.std

DRAWING DATE: JULY, 2003

IDAHO TRANSPORTATION DEPARTMENT

BOISE IDAHO

ASSISTANT CHIEF ENGINEER (DEVELOPMENT)

CHIEF ENGINEER

STANDARD DRAWING

PARABOLIC CROWN

REQUIRES SHEETS 2 OF 2

English

STANDARD DRAWING NO. A-10

SHEET 1 OF 2

PROFESSIONAL ENGINEER REGISTERED 6506 STATE OF IDAHO TED E. MASON 10/26/2010

REVISIONS											
NO.	DATE	BY	NO.	DATE	BY	NO.	DATE	BY			
1	3-05	MSM									
2	9-10	PLR									

SCALES SHOWN ARE FOR 11" X 17" PRINTS ONLY

CADD FILE NAME: a10_1010.std

DRAWING DATE: JULY, 2003

IDAHO TRANSPORTATION DEPARTMENT

BOISE IDAHO

ASSISTANT CHIEF ENGINEER (DEVELOPMENT)

CHIEF ENGINEER

STANDARD DRAWING

PARABOLIC CROWN

REQUIRES SHEETS 1 OF 2

English

STANDARD DRAWING NO.

A-10

SHEET 2 OF 2

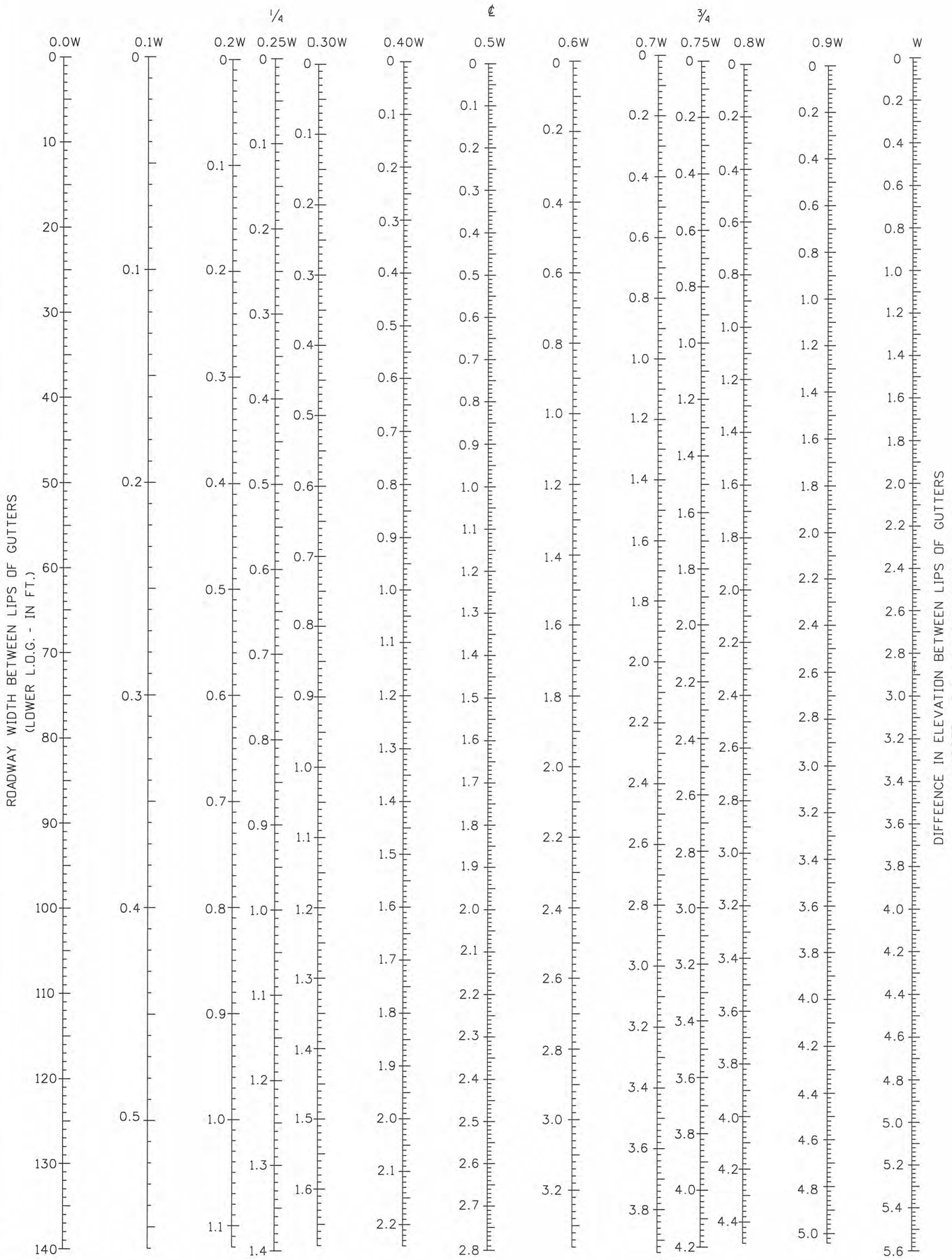

INSTRUCTIONS:

1. PLACE A STRAIGHT-EDGE ON THE LEFT-HAND SCALE, "ROADWAY WIDTH BETWEEN LIPS OF GUTTERS".
2. PLACE THE OPPOSITE END OF THE STRAIGHT-EDGE ON THE RIGHT-HAND SCALE, "DIFFERENCE IN ELEVATION BETWEEN LIPS OF GUTTERS".
3. READ THE INTERMEDIATE SCALES ACROSS THE STRAIGHT-EDGE WHICH ARE THE HEIGHTS OF ROADWAY SURFACE ABOVE THE LOWER LIP OF GUTTER. INTERPRET ION OF THE INTERMEDIATE SCALES ARE AT TENTHS AND QUARTERS OF THE ROADWAY WIDTH "W" (SEE "NOMOGRAPH EXAMPLE" ON SHEET 2 OF 2).

NOMOGRAPH

PROFESSIONAL ENGINEER REGISTERED STATE OF IDAHO E. MASON 6506

10/26/2010

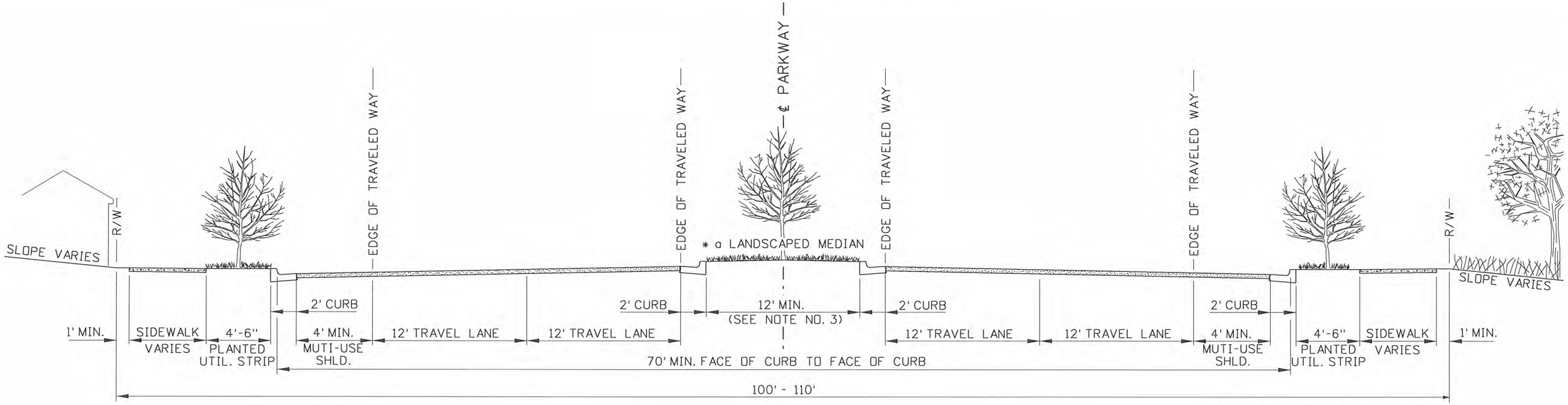

* a (SEE NOTE NO. 4)

TYPICAL SECTION

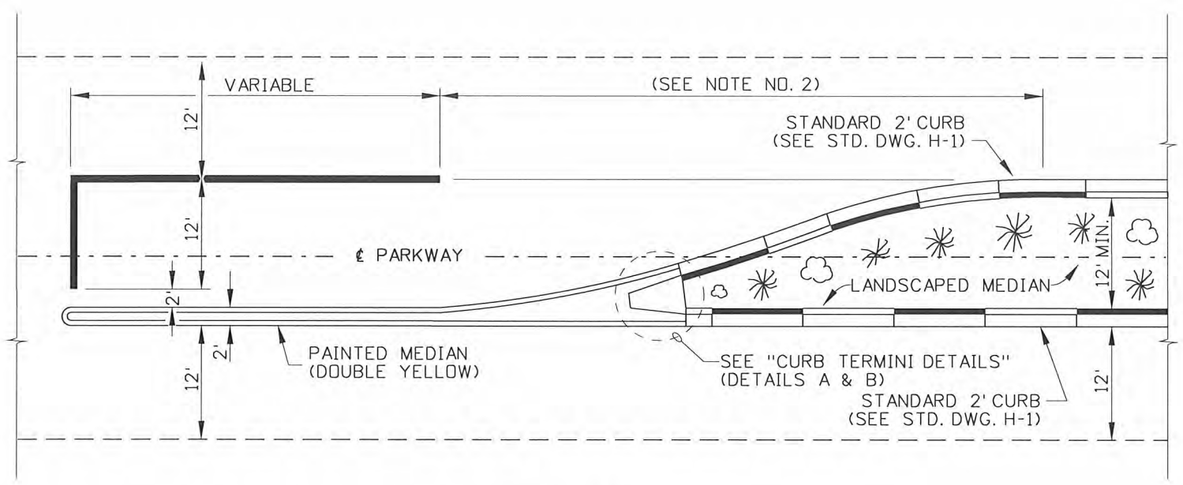

TURN BAY

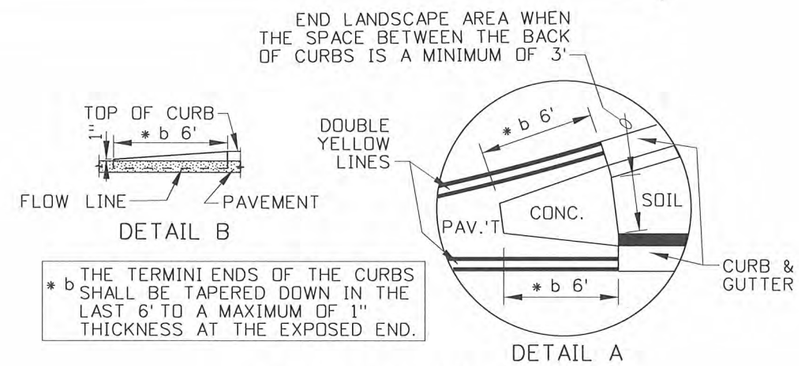

* b THE TERMINI ENDS OF THE CURBS SHALL BE TAPERED DOWN IN THE LAST 6' TO A MAXIMUM OF 1" THICKNESS AT THE EXPOSED END.

CURB TERMINI DETAILS

NOTES

1. WHEN A SHOULDER IS DESIGNATED AS A BICYCLE LANE THE BIKE TRAFFIC MUST BE DIRECTED ONE-WAY IN THE DIRECTION OF THE ADJACENT TRAFFIC LANES.

2. FOR LEFT TURN BAY DIMENSIONS SEE STD. DWG. I-21-A.

3. MINIMUM MEDIAN WIDTH IS 12'. ADDITIONAL WIDTH FOR FUTURE LANE(S) IS TO BE ADDED INTO THE MEDIAN WIDTH DURING THE PLANNING AND PRELIMINARY DESIGN STAGES.

4. TREE AND SHRUB PLANTING SHALL BE ACCORDING TO THE REQUIREMENTS OF STD. DWG. K-7.

5. NOT TO SCALE.

REVISIONS								
NO.	DATE	BY	NO.	DATE	BY	NO.	DATE	BY
1	9-10	PLR						

SCALES SHOWN ARE FOR 11" X 17" PRINTS ONLY

CADD FILE NAME: a11_1010.std

DRAWING DATE: MAY, 2005

IDAHO TRANSPORTATION DEPARTMENT

BOISE IDAHO

ASSISTANT CHIEF ENGINEER (DEVELOPMENT)

CHIEF ENGINEER

STANDARD DRAWING

URBAN PARKWAY SECTION (LOW SPEED DESIGN)

REQUIRES STD. DWG. K-7

English

STANDARD DRAWING NO.

A-11

SHEET 1 OF 1

PROFESSIONAL ENGINEER REGISTERED 6506 10/26/2010 STATE OF IDAHO TED E. MASON

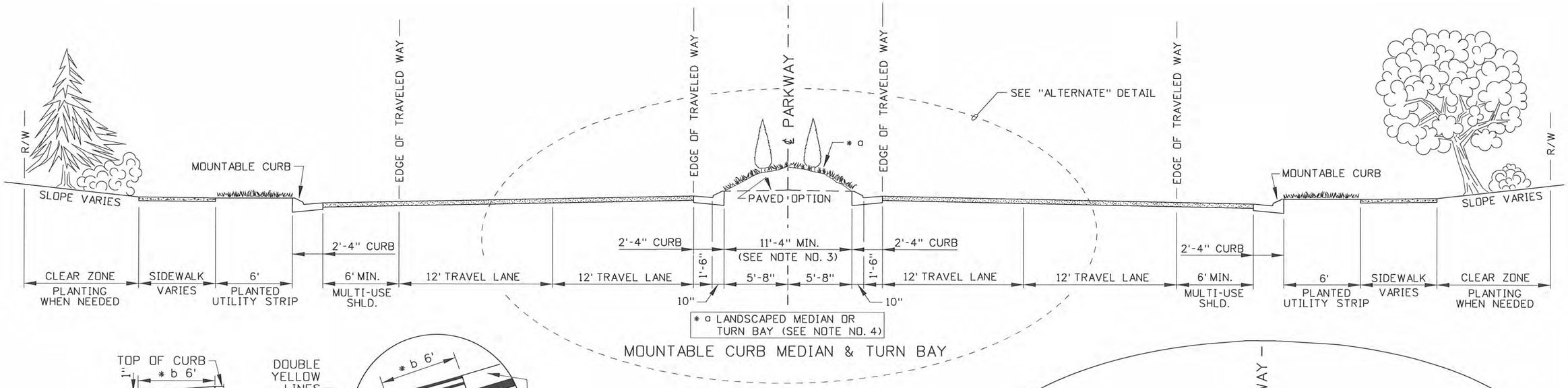

TYPICAL SECTION

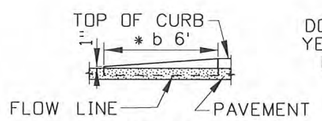

DETAIL B

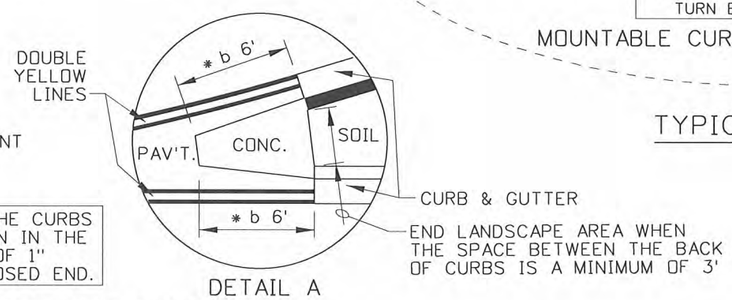

DETAIL A

* b THE TERMINI ENDS OF THE CURBS SHALL BE TAPERED DOWN IN THE LAST 6' TO A MAXIMUM OF 1" THICKNESS AT THE EXPOSED END.

CURB TERMINI DETAILS

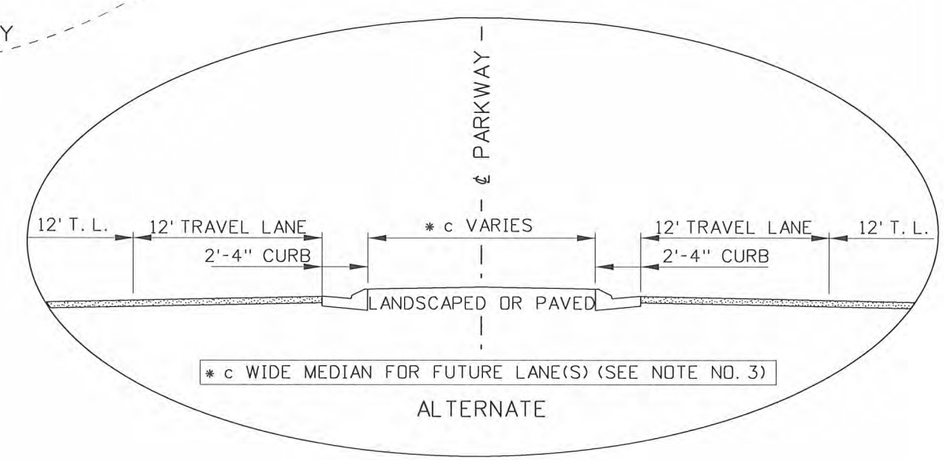

ALTERNATE

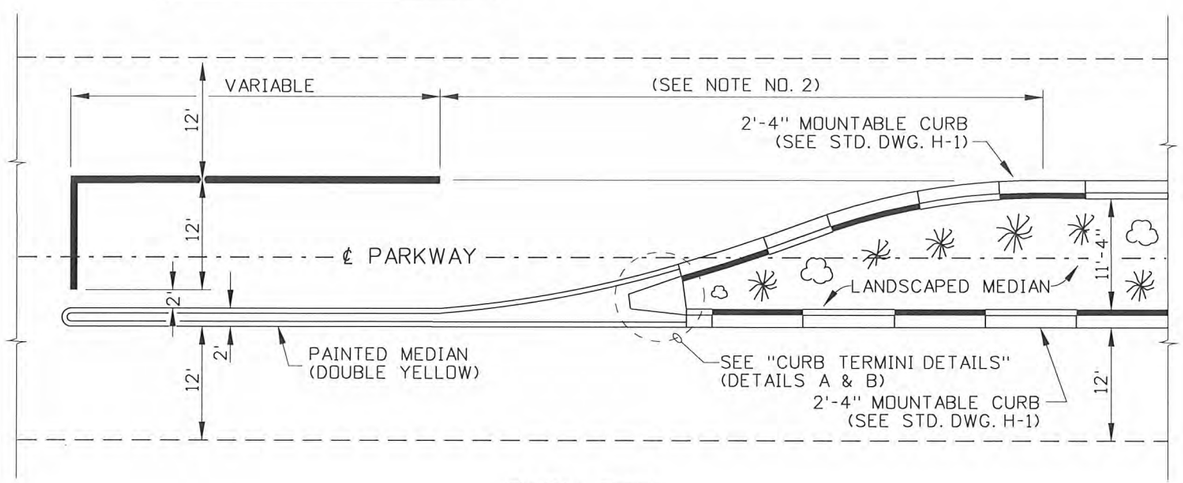

TURN BAY

NOTES

1. WHEN SHOULDER IS DESIGNATED AS A BICYCLE LANE THE BIKE TRAFFIC MUST BE DIRECTED ONE-WAY IN THE DIRECTION OF THE ADJACENT TRAFFIC LANES.

2. FOR LEFT TURN BAY DIMENSIONS SEE STD. DWG. I-21-A.

3. MINIMUM MEDIAN WIDTH IS 11'-4". ADDITIONAL WIDTH FOR FUTURE LANE(S) IS TO BE ADDED INTO THE MEDIAN WIDTH DURING THE PLANNING AND PRELIMINARY DESIGN STAGES.

4. TREE AND SHRUB PLANTING SHALL BE ACCORDING TO THE REQUIREMENTS OF STD. DWG. K-7.

5. NOT TO SCALE.

REVISIONS								
NO.	DATE	BY	NO.	DATE	BY	NO.	DATE	BY
1	9-10	PLR						

SCALES SHOWN ARE FOR 11" X 17" PRINTS ONLY

CADD FILE NAME: a12_1010.std

DRAWING DATE: JUNE, 2005

IDAHO TRANSPORTATION DEPARTMENT

BOISE IDAHO

ASSISTANT CHIEF ENGINEER (DEVELOPMENT)

CHIEF ENGINEER

STANDARD DRAWING

SUBURBAN PARKWAY SECTION (HIGH SPEED DESIGN)

REQUIRES STD. DWG. K-7

English

STANDARD DRAWING NO.

A-12

SHEET 1 OF 1

PROFESSIONAL ENGINEER REGISTERED 6506 10/26/2010 STATE OF IDAHO TED E. MASON

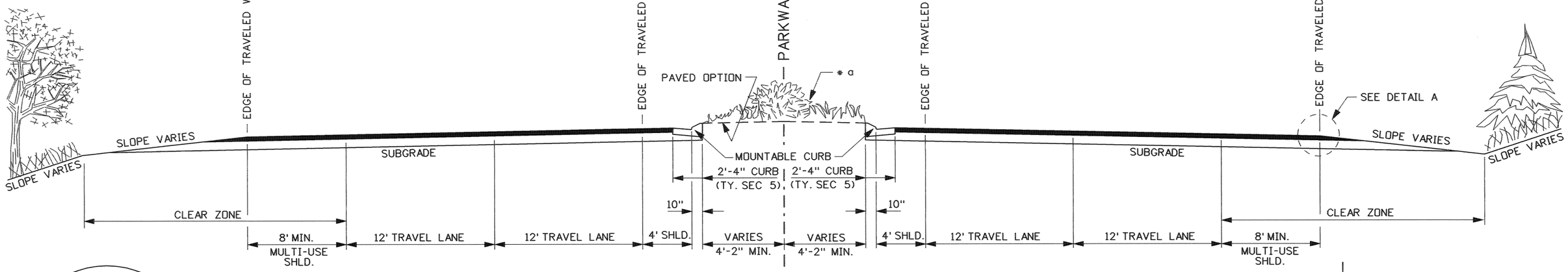

* a LANDSCAPED MEDIAN (SEE NOTE NO. 1)

CURBED MEDIAN

CURBED OPTION

DETAIL A

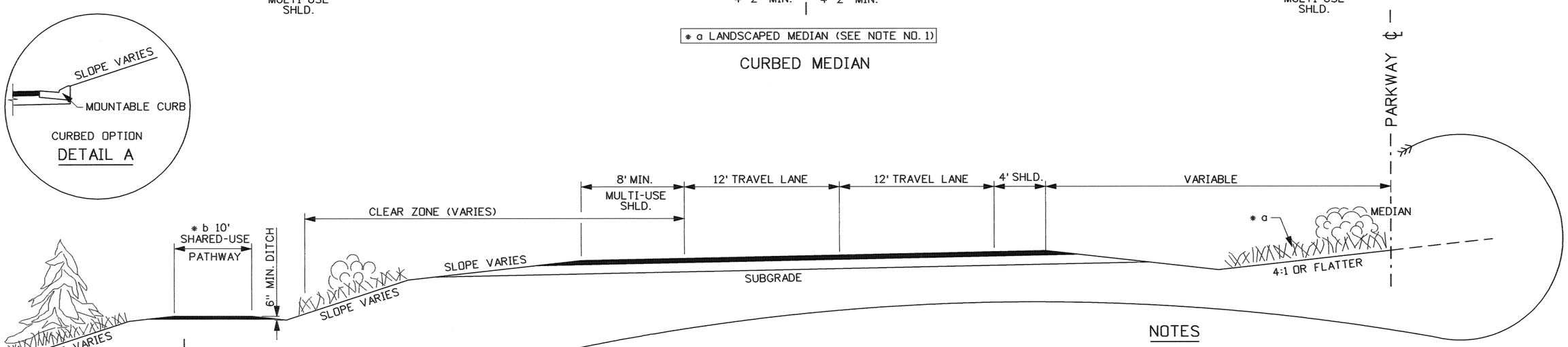

NOTES

1. TREE AND SHRUB PLANTING SHALL BE ACCORDING TO THE REQUIREMENTS OF STD. DWG. K-7.
2. FOR DESIGN PURPOSES FURTHER INFORMATION ABOUT IDAHO TRANSPORTATION DEPARTMENT (ITD) PATHWAY STANDARDS CAN BE OBTAINED BY CONTACTING ITD ROADWAY DESIGN SECTION.
3. NOT TO SCALE.

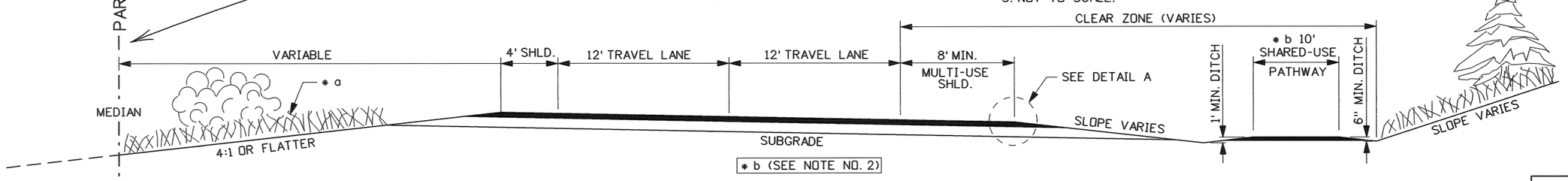

* b (SEE NOTE NO. 2)

GRADED MEDIAN

TYPICAL SECTIONS

REVISIONS								
NO.	DATE	BY	NO.	DATE	BY	NO.	DATE	BY

SCALES SHOWN ARE FOR 11" X 17" PRINTS ONLY

CADD FILE NAME a13_0505.std

DRWG. ORIG. DATE: MAY, 2005

IDAHO TRANSPORTATION DEPARTMENT

BOISE IDAHO

P. Thomas
ASSISTANT CHIEF ENGINEER (DEVELOPMENT)

Steven C. Hutchinson
CHIEF ENGINEER

STANDARD DRAWING

RURAL PARKWAY SECTIONS (HIGH SPEED DESIGN)

REQUIRES STD. DWG. K-7

English

STANDARD DRWG. NO.

A-13

SHEET 1 OF 1

PROFESSIONAL ENGINEER * LAND SURVEYOR
REGISTERED
2240
5/13/05
STATE OF IDAHO
MILFORD MILLER

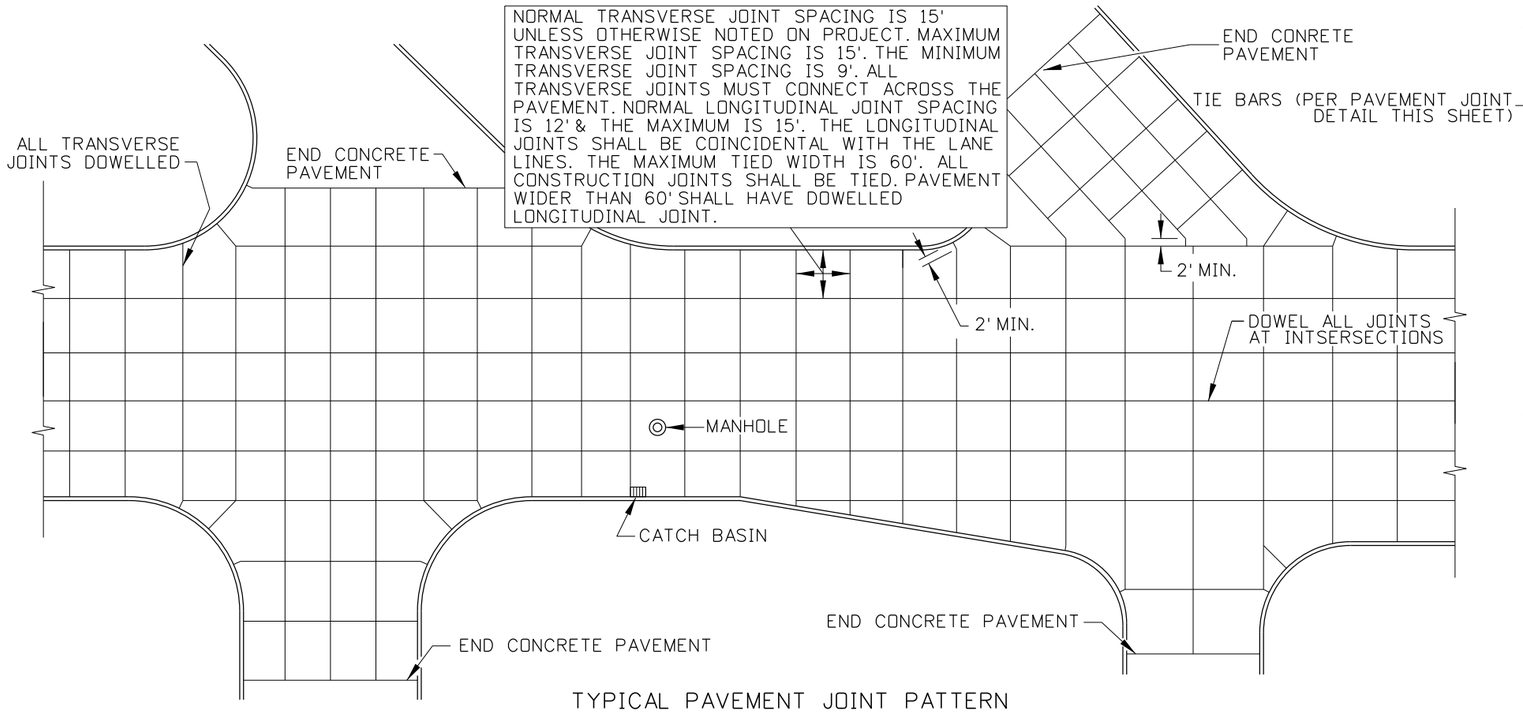

TYPICAL PAVEMENT JOINT PATTERN

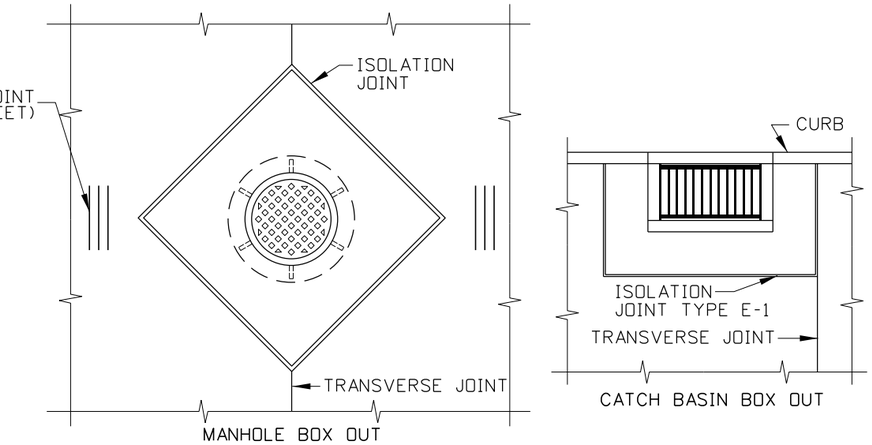

BOX OUT DETAILS

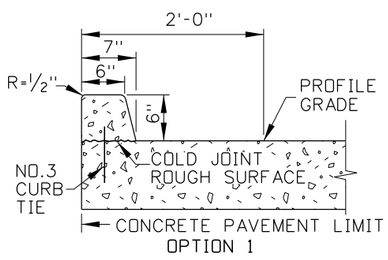

OPTION 1

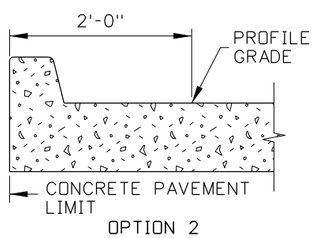

OPTION 2

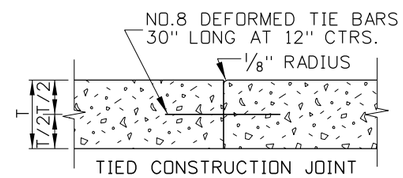

PAVEMENT JOINT DETAIL

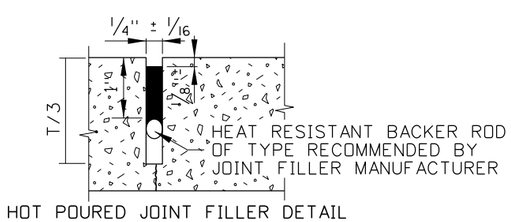

HOT POURED JOINT FILLER DETAIL

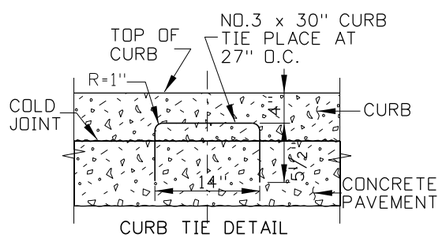

CURB TIE DETAIL

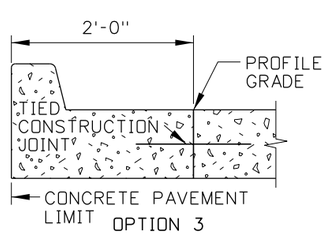

OPTION 3

CURB & GUTTER DETAILS

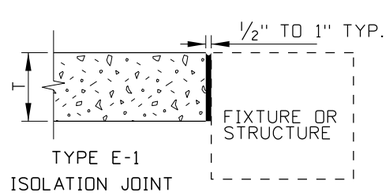

TYPE E-1
ISOLATION JOINT

NOTES

1. THE TYPICAL PAVEMENT JOINT PATTERN SHOWN IS FOR ILLUSTRATION PURPOSES ONLY AND IS INTENDED TO BE USED AS A GUIDE IN DEVELOPING THE JOINT PATTERN FOR THE PROJECT. THE CONTRACTOR SHALL PREPARE A PAVEMENT JOINT PATTERN FOR THE ENTIRE PROJECT FOR APPROVAL BY THE ENGINEER.

2. WHEN POSSIBLE, MANHOLES SHALL BE CENTERED BETWEEN JOINTS. JOINT SPACING MAY BE ADJUSTED NEAR MANHOLES, WITHIN THE STANDARD LIMITS. SEE C-1-A-2.

3. IF THE CONTRACTOR ELECTS TO BOX OUT AROUND THE MANHOLE OR CATCH BASIN FRAMES AND PLACE THE PAVEMENT AROUND THE FRAME AS A SEPARATE OPERATION, TIED CONSTRUCTION JOINTS SHALL BE PLACED AS SHOWN IN THE BOX OUT DETAIL.

4. JOINTS IN THE CURBS SHALL COINCIDE WITH TRANSVERSE JOINTS IN THE PAVEMENT.

5. SEE STANDARD DRAWING H-1-A AND H-1-B FOR ADDITIONAL NOTES ON REQUIREMENTS FOR CURB CONSTRUCTION.

6. THE CONTRACTOR MAY PLACE CURBS AS SHOWN IN OPTIONS 1, 2, OR 3.

7. SAWED JOINTS SHALL BE 1/4" WIDE AND SHALL BE FILLED WITH HOT POURED ELASTOMERIC JOINT FILLER MEETING REQUIREMENTS OF SUBSECTION 704.02 OR A NEOPRENE COMPRESSION SEAL OF APPROVED CONFIGURATION MEETING THE REQUIREMENTS OF SUBSECTION 704.04 MAY BE USED.

ORIGINAL STORED AT: ITD, Headquarters 3311 West State Boise, Idaho

ORIGINAL SIGNED BY: MICHAEL J. SANTI
DATE ORIGINAL SIGNED: OCTOBER 21, 2011

REVISIONS								
NO.	DATE	BY	NO.	DATE	BY	NO.	DATE	BY

SCALES SHOWN ARE FOR 11" X 17" PRINTS ONLY

CADD FILE NAME: c1a11011.std

DRAWING DATE: AUGUST, 2011

IDAHO TRANSPORTATION DEPARTMENT

BOISE IDAHO

ORIGINAL SIGNED BY: LOREN THOMAS
HIGHWAYS PROGRAM OVERSIGHT ENGINEER
ORIGINAL SIGNED BY: TOM COLE
CHIEF ENGINEER

STANDARD DRAWING

URBAN CONCRETE PAVEMENT DETAILS

English

STANDARD DRAWING NO.

C-1-A-1

SHEET 1 OF 1

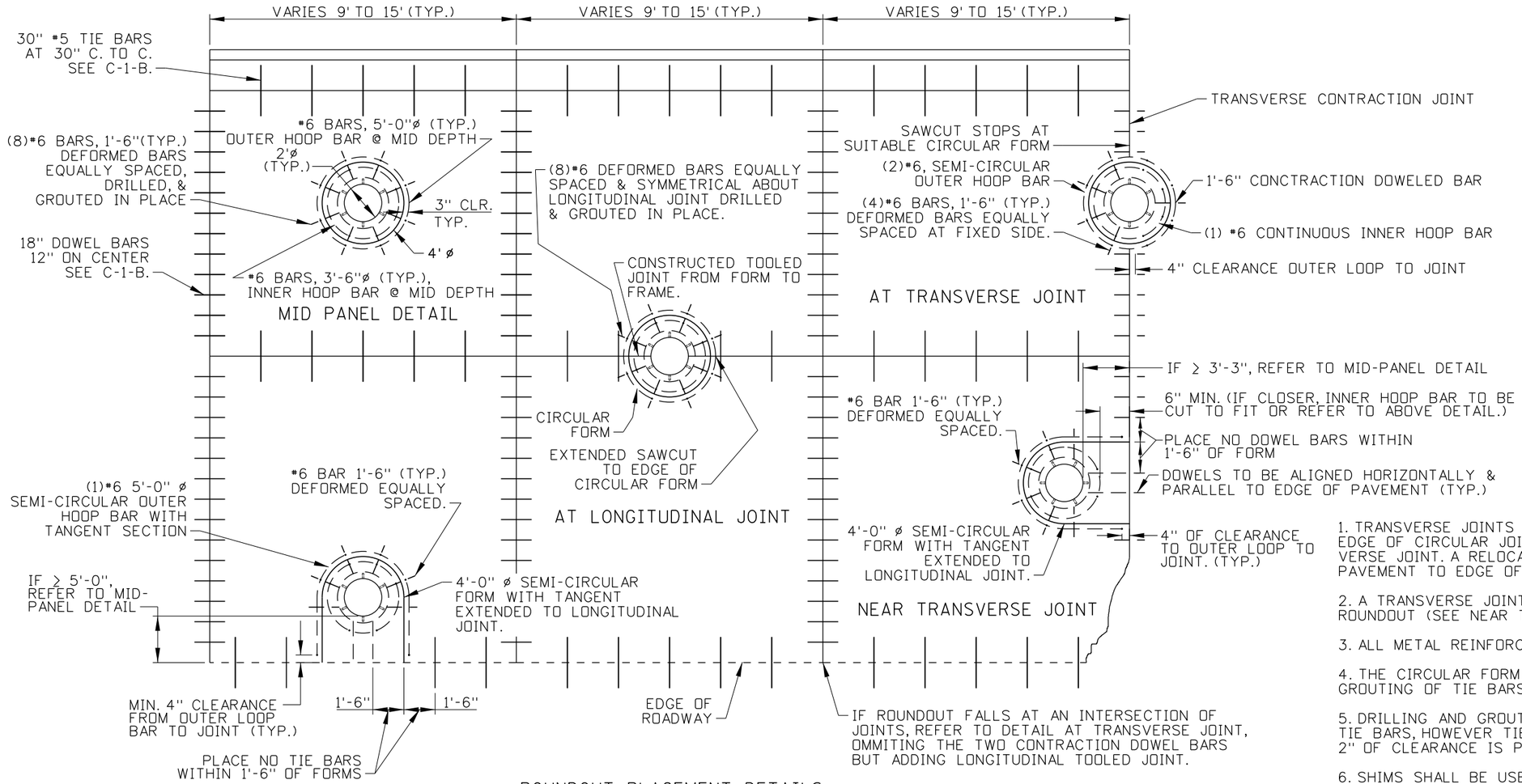

ROUNDOUT PLACEMENT DETAILS

NOTES

1. TRANSVERSE JOINTS MAY BE MOVED TO ACCOMMODATE ROUNDOUT. THE EDGE OF CIRCULAR JOINT SHALL BE A MINIMUM OF 2'-0" FROM TRANSVERSE JOINT. A RELOCATED JOINT SHALL BE CONTINUOUS FROM EDGE OF PAVEMENT TO EDGE OF PAVEMENT.

2. A TRANSVERSE JOINT SHALL BE ALIGNED WITH THE CENTERLINE OF THE ROUNDOUT (SEE NEAR TRANSVERSE JOINT DETAIL.)

3. ALL METAL REINFORCEMENT BARS SHALL BE EPOXY COATED.

4. THE CIRCULAR FORM SHALL BE REMOVED PRIOR TO DRILLING AND GROUTING OF TIE BARS.

5. DRILLING AND GROUTING IS THE PREFERRED METHOD OF PLACING TIE BARS, HOWEVER TIE BARS MAY BE POURED IN PLACE IF A MAXIMUM 2" OF CLEARANCE IS PROVIDED TO OUTER EDGE OF FRAME.

6. SHIMS SHALL BE USED TO ADJUST ALL FRAMES, AFTER ADJUSTING MORTAR HAS CURED, THE SHIMS SHALL BE REMOVED AND THE VOIDS UNDER THE FRAMES FILLED WITH NON -SHRINK GROUT (SEE STD. DWG. E-9 FOR ALTERNATE FRAME PLACEMENT).

7. METAL REINFORCEMENT FOR HOOP BARS SHALL BE ONE- PIECE CONSTRUCTION HAVING A MINIMUM LAP LENGTH OF 2'-0".

8. ALL SITUATIONS NOT SHOWN AND MAY REQUIRE COMBINATION OF DETAILS.

9. WHEN THE CAST-IN-PLACE ROUNDOUT IS USED THE FRAME SHALL BE ANCHORED TO THE STRUCTURE TO PREVENT MOVEMENT DURING THE PAVING OPERATION.

10. STANDARD DRAWING E-9 SHALL ACCOMPANY THIS DRAWING.

11. DOWEL BAR AND TIE BAR SIZE AND LOCATION SHALL BE AS SHOWN ON C-1-B.

12. NOT TO SCALE.

ORIGINAL STORED AT: ITD, Headquarters 3311 West State Boise, Idaho

ORIGINAL SIGNED BY: MICHAEL J. SANTI
DATE ORIGINAL SIGNED: OCTOBER 21, 2011

REVISIONS								
NO.	DATE	BY	NO.	DATE	BY	NO.	DATE	BY

SCALES SHOWN ARE FOR 11" X 17" PRINTS ONLY

CADD FILE NAME: c1a21011.std

DRAWING DATE: AUGUST, 2011

IDAHO TRANSPORTATION DEPARTMENT

BOISE IDAHO

ORIGINAL SIGN BY: LOREN THOMAS
HIGHWAYS PROGRAM OVERSIGHT ENGINEER
ORIGINAL SIGN BY: TOM COLE
CHIEF ENGINEER

STANDARD DRAWING

MANHOLE COLLARS (PCC PAVEMENT ROUNDOUTS)

REQUIRES SHT. 2 OF 2 & STD. DWG. E-9

English

STANDARD DRAWING NO.

C-1-A-2

SHEET 1 OF 2

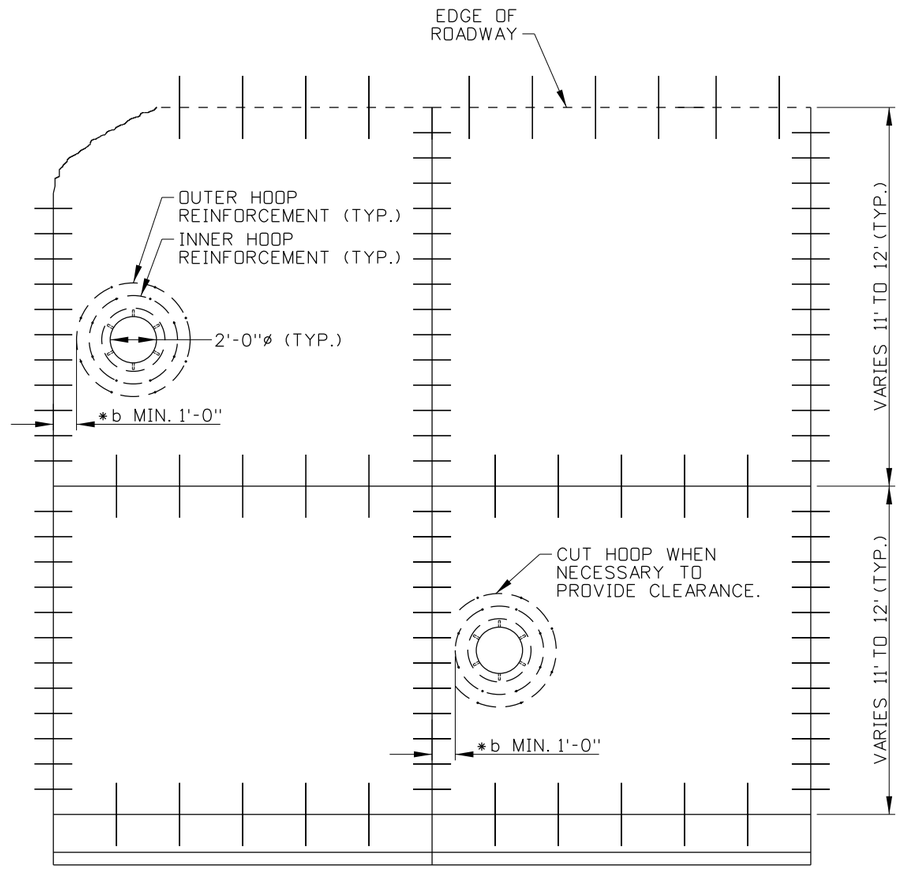

*b WHEN LESS THAN 1'-0" A FORMED ROUNDOUT SHALL BE USED.

CAST IN PLACE DETAIL

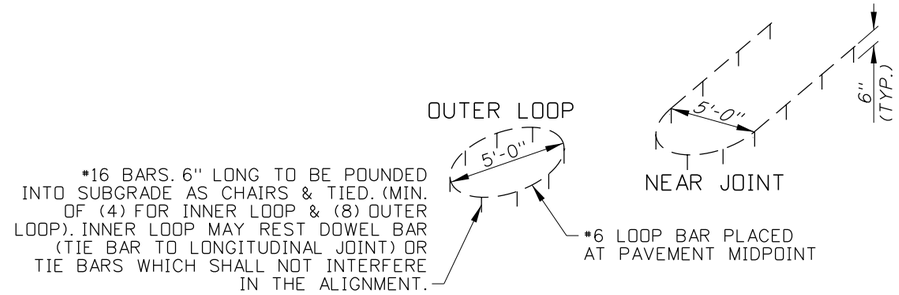

METAL REINFORCEMENT TIEING DETAIL OPTION

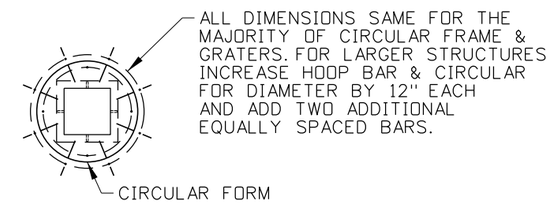

APPLICATION FOR SQUARE FRAME W/GRATE & MANHOLE

FOR DETAILS INSIDE OF CIRCULAR ISOLATION JOINT SEE STD. DWG. E-9

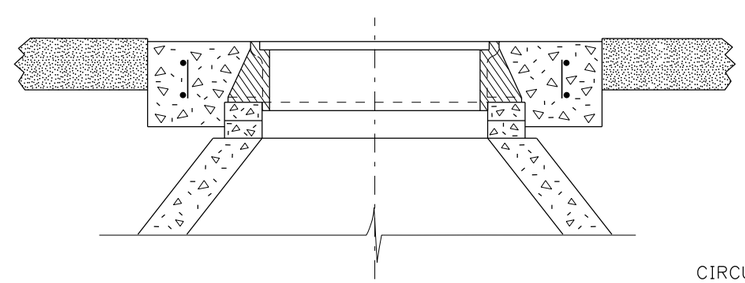

MANHOLE FRAME FOR VISUAL REFERENCE ONLY

(SEE STANDARD DRAWING E-9 FOR REINFORCEMENT DETAILS

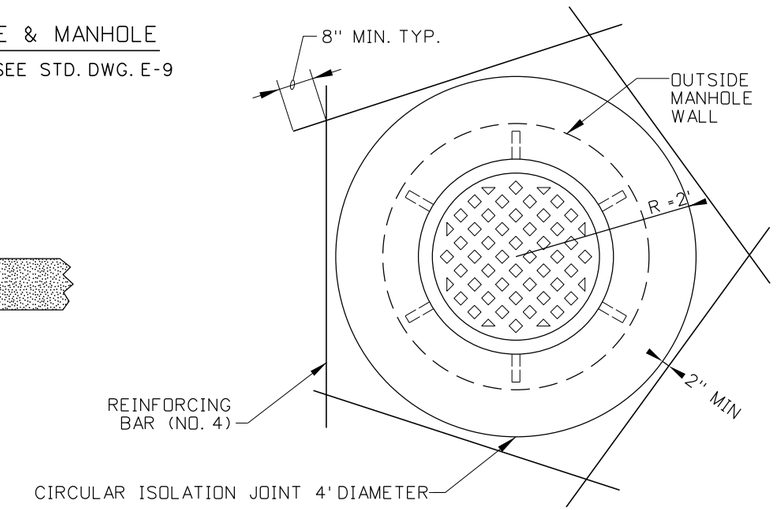

METAL REINFORCEMENT TIEING DETAIL OPTION

ORIGINAL STORED AT: ITD, Headquarters 3311 West State Boise, Idaho

ORIGINAL SIGNED BY: MICHAEL J. SANTI DATE ORIGINAL SIGNED: OCTOBER 21, 2011

REVISIONS								
NO.	DATE	BY	NO.	DATE	BY	NO.	DATE	BY

SCALES SHOWN ARE FOR 11" X 17" PRINTS ONLY

CADD FILE NAME: c1a21011.std

DRAWING DATE: AUGUST, 2011

IDAHO TRANSPORTATION DEPARTMENT

BOISE IDAHO

ORIGINAL SIGN BY: LOREN THOMAS
HIGHWAYS PROGRAM OVERSIGHT ENGINEER

ORIGINAL SIGN BY: TOM COLE
CHIEF ENGINEER

STANDARD DRAWING

MANHOLE COLLARS (PCC PAVEMENT ROUNDOUTS)

REQUIRES SHT. 1 OF 2 & STD. DWG. E-9

English

STANDARD DRAWING NO.

C-1-A-2

SHEET 2 OF 2

THE MAXIMUM TIED TRANSVERSE WIDTH SHALL BE 60 FEET. LONGITUDINAL JOINTS THAT ARE UN-TIED IN ACCORDANCE WITH THE FOREGOING SHALL BE APPROVED BY THE ENGINEER. IN NO CASE SHALL AN UN-TIED JOINT BE A CONSTRUCTION JOINT.

THE MAXIMUM TRANSVERSE SLAB LENGTH IS 15 FT.

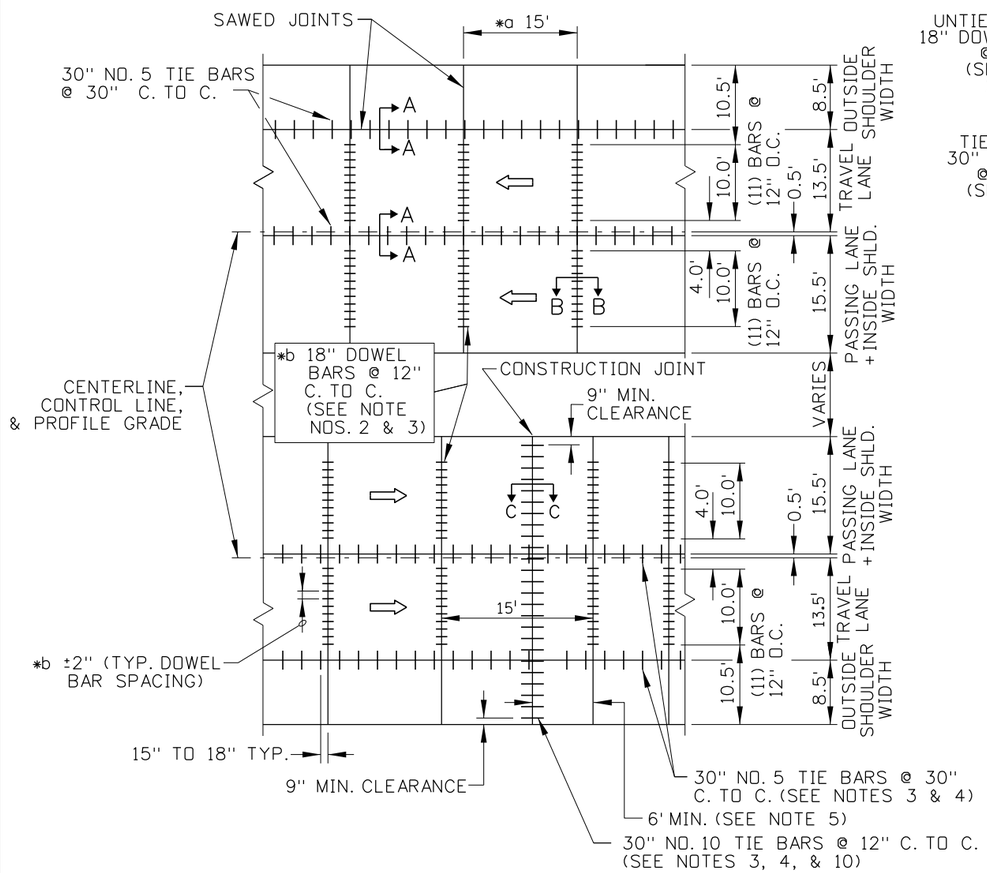

TYPICAL ROADWAY DETAIL

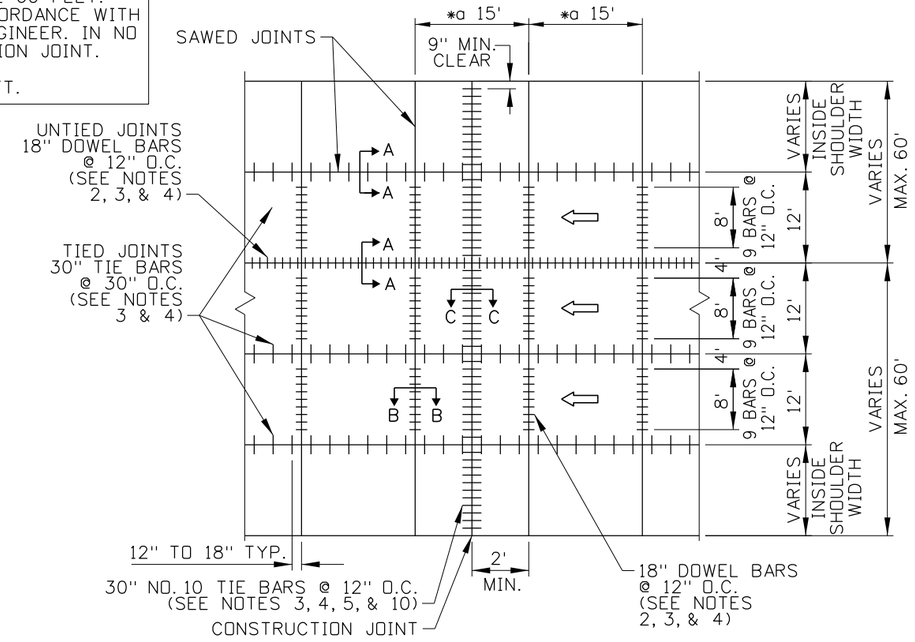

*a ALL JOINTS ARE PERPENDICULAR TO ℄

MULTIPLE LANE ROADWAY DETAIL

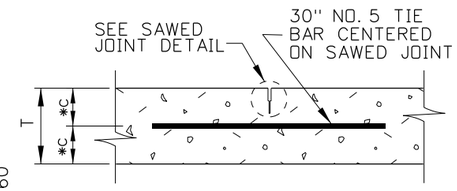

LONGITUDINAL JOINT
SECTION A-A

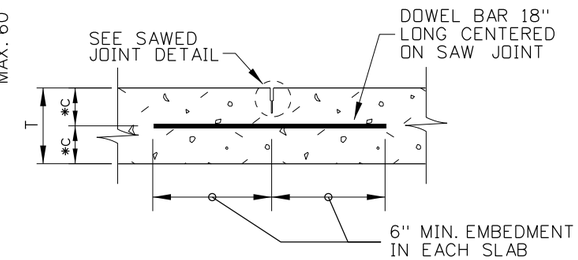

TRANSVERSE JOINT
SECTION B-B

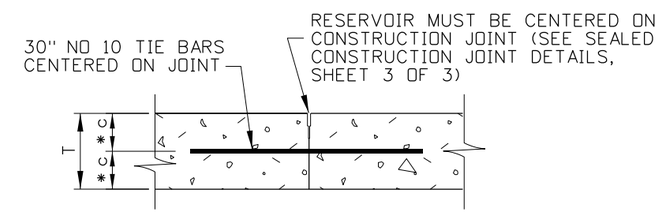

CONSTRUCTION JOINT
SECTION C-C

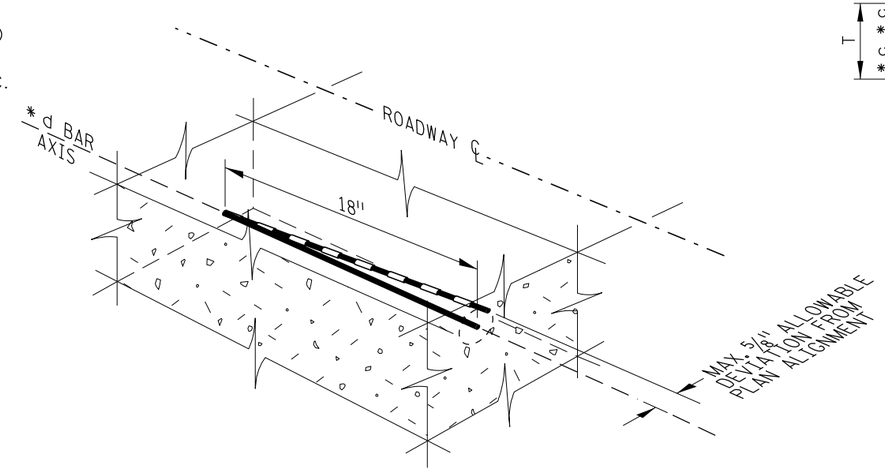

ALIGNMENT TOLERANCE FOR PAVEMENT DOWEL BARS

SUB-NOTES
*a ALL JOINTS ARE PERPENDICULAR TO ℄
*b ALL DOWEL BAR SPACING TOLERANCE IS TO 2" (ALSO SEE "ALIGNMENT TOLERANCE FOR PAVEMENT DOWEL BARS" DETAIL).
*c T/2±1"
*d THE PLAN ALIGNMENT IS FOR THE BAR AXIS TO BE PARALLEL TO CENTERLINE AND PARALLEL TO PAVEMENT SURFACE.

BAR DIAMETER TABLE
DOWEL BAR
IN TRANSVERSE JOINTS
(UNLESS OTHERWISE NOTED ON PROJECT)

T = PAVEMENT THICKNESS	BAR DIAMETER
T<=11"	1 1/4"
11" < T<=13"	1 1/2"
T > 13"	1 3/4"

ORIGINAL STORED AT: ITD, Headquarters 3311 West State Boise, Idaho

ORIGINAL SIGNED BY: MICHAEL J. SANTI DATE ORIGINAL SIGNED: OCTOBER 23, 2011

REVISIONS

NO.	DATE	BY	NO.	DATE	BY	NO.	DATE	BY
1	4-84	GB	6	1-91	GB	11	9-08	JRV
2	1-85	GB	7	12-92	AS	12	10-10	PLR
3	8-85	GB	8	4-93	MSM	13	8-11	RSC
4	8-86	GB	9	1-97	AS			
5	11-89	GB	10	11-01	MSM			

SCALES SHOWN ARE FOR 11" X 17" PRINTS ONLY

CADD FILE NAME: c1b_1011.std

DRAWING DATE: APRIL, 1984

IDAHO TRANSPORTATION DEPARTMENT

BOISE IDAHO

ORIGINAL SIGN BY: LOREN THOMAS
HIGHWAYS PROGRAM OVERSIGHT ENGINEER
ORIGINAL SIGN BY: TOM COLE
CHIEF ENGINEER

STANDARD DRAWING

DOWELED CONCRETE PAVEMENT DETAILS

REQUIRES SHT. 2 OF 3 & 3 OF 3

English

STANDARD DRAWING NO.
C-1-B

SHEET 1 OF 3

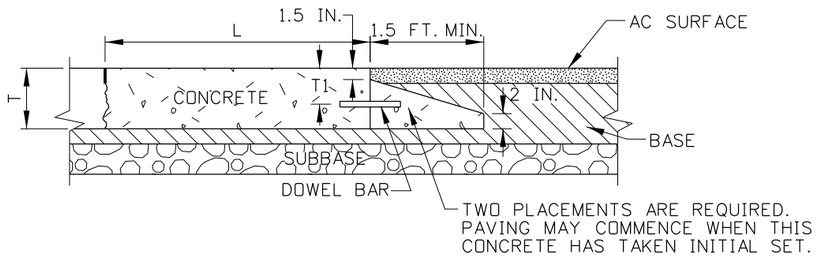

NOTES:
1. T = THICKNESS OF CONCRETE PAVEMENT (I.E. DEPTH)
2. L = PANEL LENGTH(I.E. JOINT SPACING)
3. T1 = (T + 1.5") / 2
4. FOR RECOMMENDED DOWEL SIZES, SEE JOINT TYPES SHEET.

ELEVATION - IMPACT SLAB, HIGHWAYS/STREETS/ROADS

FOR TRANSVERSE JOINTS ABUTTING ASPHALT PAVEMENT IN RECONSTRUCTION OR NEW CONSTRUCTION PROJECTS WHERE T>7 IN.

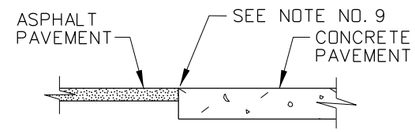

ASPHALT & CONCRETE PAVEMENT JOINT DETAIL

NOT FOR USE UNLESS SPECIFICALLY CALLED OUT IN PLANS.

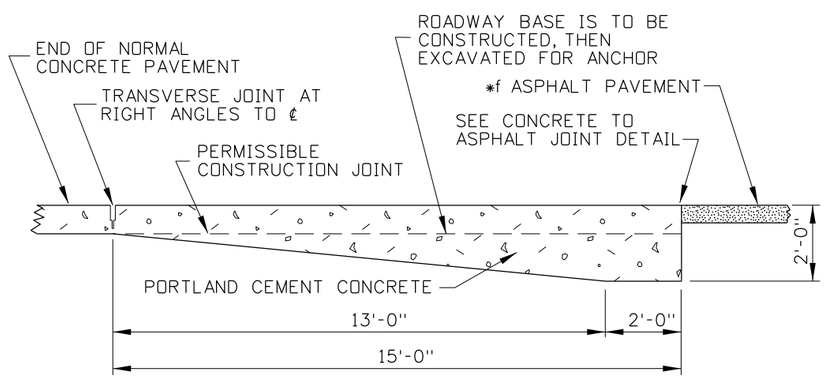

ELEVATION - ANCHOR FOR END OF CONCRETE

OPTIONAL

SUB-NOTES
*f THIS ANCHOR IS NOT TO BE USED IN CONJUNCTION WITH CONCRETE PAVEMENT.

NOTES

1. THE PAVEMENT EDGE IS TO BE PLACED APPROXIMATELY VERTICAL.

2. THE DOWEL BAR DIAMETERS SHALL BE DETERMINED BY THE BAR DIAMETER TABLE.

3. THE TIE BARS SHALL BE EPOXY COATED AND MEET THE REQUIREMENTS OF AASHTO M 284. THE DOWEL BARS SHALL BE COATED TO MEET THE REQUIREMENTS OF AASHTO M 254.

4. THE MAXIMUM TIED TRANSVERSE WIDTH SHALL BE 60 FEET. LONGITUDINAL JOINTS THAT ARE UN-TIED IN ACCORDANCE WITH THE FOREGOING SHALL BE APPROVED BY THE ENGINEER. IN NO CASE SHALL AN UN-TIED JOINT BE A CONSTRUCTION JOINT.

5. A CONSTRUCTION JOINT SHALL BE AT LEAST 6 FEET FROM A SAWED JOINT.

6. TRANSVERSE AND LONGITUDINAL JOINTS SHALL BE SAWED JOINTS.

7. SEALANTS AND PREFORMED SEALS SHALL BE APPLIED IN ACCORDANCE WITH THE MANUFACTURER'S REQUIREMENTS.

8. THE ANCHOR IS TO BE USED AT RAILROAD GRADE CROSSINGS ADJACENT TO FLEXIBLE PAVEMENTS AND SIMILAR INTERRUPTIONS TO THE CONCRETE PAVEMENT.

9. MAKE A VERTICAL SAW CUT IN THE ASPHALT TO SERVE AS A FORM FOR THE END OF THE CONCRETE PAVEMENT.

10. PREFERRED PRACTICE IS TO PLACE THE CONSTRUCTION JOINT AT THE LOCATION OF A PLANNED CONTRACTION JOINT AND USE DOWEL BARS PER STD. TRANSVERSE JOINT DETAILS.

11. NOT TO SCALE

12. ALL LONGITUDINAL CONCRETE TO ASPHALT JOINTS SHALL BE SAWED AND SEALED.

ORIGINAL STORED AT: ITD, Headquarters 3311 West State Boise, Idaho

ORIGINAL SIGNED BY: MICHAEL J. SANTI DATE ORIGINAL SIGNED: OCTOBER 23, 2011

REVISIONS

NO.	DATE	BY	NO.	DATE	BY	NO.	DATE	BY
1	4-84	GB	6	1-91	GB	11	9-08	JRV
2	1-85	GB	7	12-92	AS	12	10-10	PLR
3	8-85	GB	8	4-93	MSM	13	8-11	RSC
4	8-86	GB	9	1-97	AS			
5	11-89	GB	10	11-01	MSM			

SCALES SHOWN ARE FOR 11" X 17" PRINTS ONLY

CADD FILE NAME: c1b_1011.std

DRAWING DATE: APRIL, 1984

IDAHO TRANSPORTATION DEPARTMENT

BOISE IDAHO

ORIGINAL SIGN BY: LOREN THOMAS
HIGHWAYS PROGRAM OVERSIGHT ENGINEER
ORIGINAL SIGN BY: TOM COLE
CHIEF ENGINEER

STANDARD DRAWING

DOWELED CONCRETE PAVEMENT DETAILS

REQUIRES SHT. 1 OF 3 & 3 OF 3

English

STANDARD DRAWING NO.

C-1-B

SHEET 2 OF 3

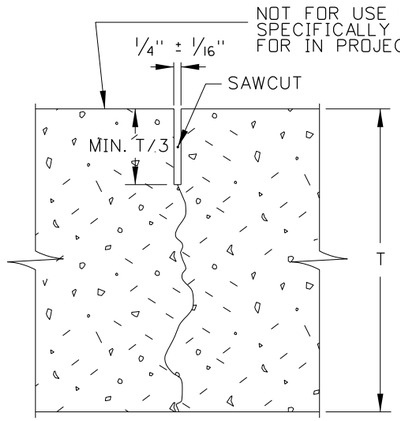

SINGLE CUT
(NO SEALANT)

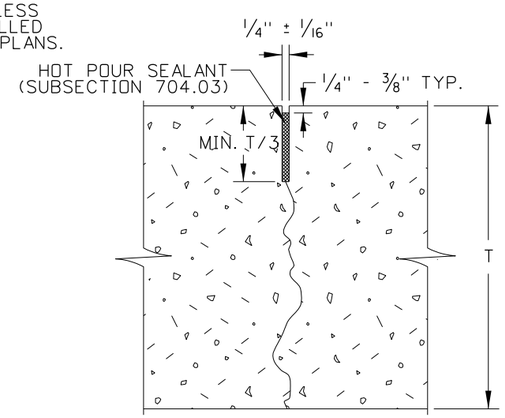

SINGLE CUT
(FIELD-INSTALLED SEALANT)

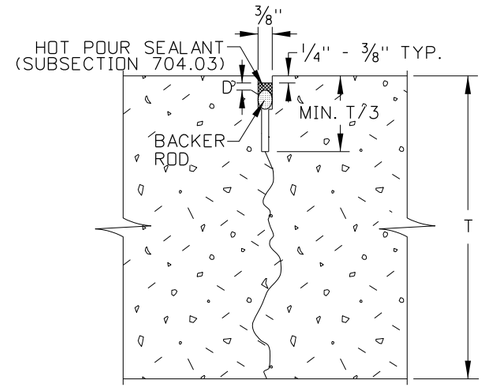

WIDENED CUT
(FIELD-INSTALLED SEALANT)

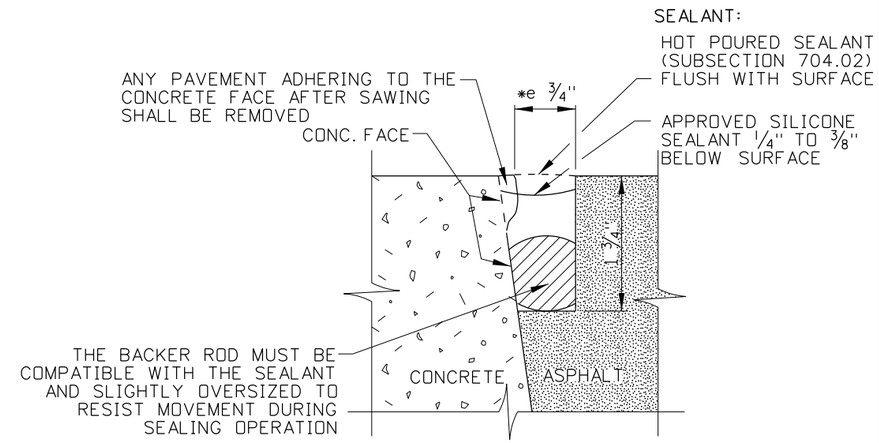

CONCRETE TO ASPHALT

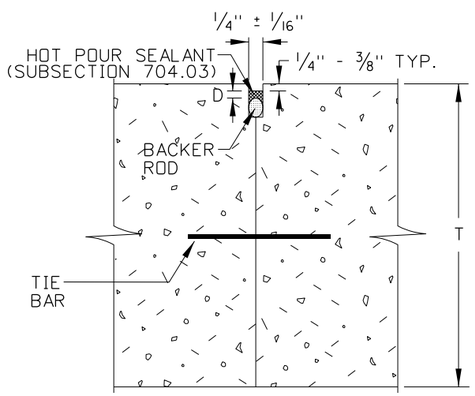

SEALED CONSTRUCTION JOINT
(FIELD-INSTALLED SEALANT)

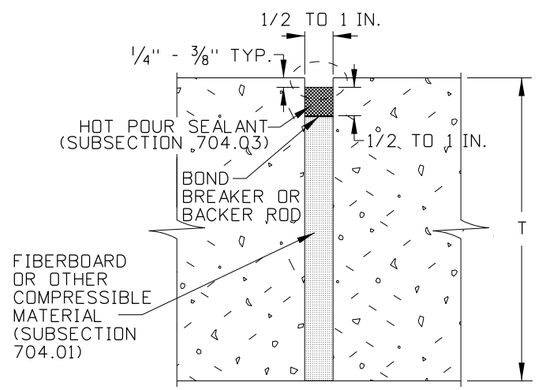

ISOLATION JOINT
(FIELD-INSTALLED SEALANT)

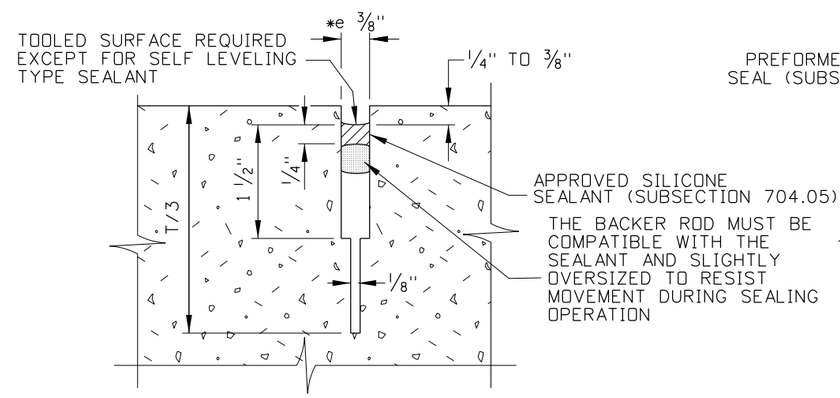

SILICONE SEALANT

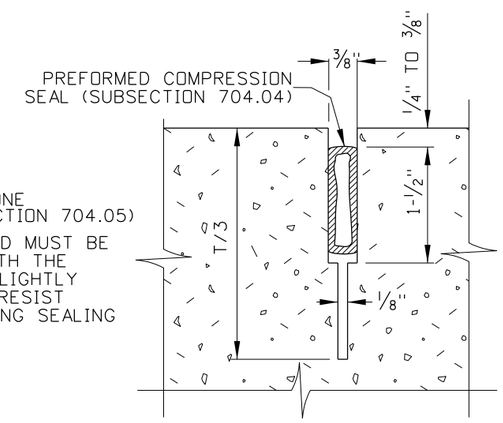

COMPRESSION SEAL

NOTES:

1. FOR HOT-POURED SEALANT, SHAPE FACTOR D/W = 1 (TYPICAL, ONLY IF BACKER ROD USED)
2. FOR SILICONE SEALANT, D/W = 0.5 (TYPICAL)
3. FOR TWO-COMPONENT COLD-POURED SEALANT, D/W = 0.5 (TYPICAL)
4. FOR PREFORMED COMPRESSION SEAL, W IS SIZED FOR SLAB & CLIMATE
5. SUBSECTION REFERENCES ARE ITD STANDARD SPECIFICATIONS FOR HIGHWAY CONSTRUCTION.
6. SEALANTS AND PREFORMED SEALS SHALL BE APPLIED IN ACCORDANCE WITH THE MANUFACTURER'S REQUIREMENTS.
7. SAW CUT TO CONTROL SLAB CRACKING SHALL BE T/3 DEEP."T" EQUALS DESIGN THICKNESS OF CONC. PAVEMENT.

CROSS-SECTIONS:

SUB-NOTES
*e DIMENSIONING REFERS TO SEALANT RESERVOIR ONLY.

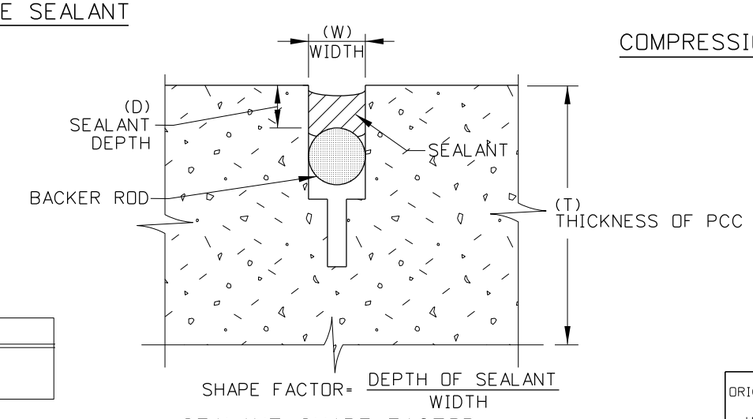

SEALANT SHAPE FACTOR

ORIGINAL STORED AT: ITD, Headquarters 3311 West State Boise, Idaho

ORIGINAL SIGNED BY: MICHAEL J. SANTI
DATE ORIGINAL SIGNED: OCTOBER 23, 2011

REVISIONS

NO.	DATE	BY	NO.	DATE	BY	NO.	DATE	BY
1	4-84	GB	6	1-91	GB	11	9-08	JRV
2	1-85	GB	7	12-92	AS	12	10-10	PLR
3	8-85	GB	8	4-93	MSM	13	8-11	RSC
4	8-86	GB	9	1-97	AS			
5	11-89	GB	10	11-01	MSM			

SCALES SHOWN ARE FOR 11" X 17" PRINTS ONLY

CADD FILE NAME: c1b_1011.std

DRAWING DATE: APRIL, 1984

IDAHO TRANSPORTATION DEPARTMENT

BOISE IDAHO

ORIGINAL SIGN BY: LOREN THOMAS
HIGHWAYS PROGRAM OVERSIGHT ENGINEER
ORIGINAL SIGN BY: TOM COLE
CHIEF ENGINEER

STANDARD DRAWING

DOWELED CONCRETE PAVEMENT DETAILS

REQUIRES SHT. 1 OF 3 & 2 OF 3

English

STANDARD DRAWING NO.

C-1-B

SHEET 3 OF 3

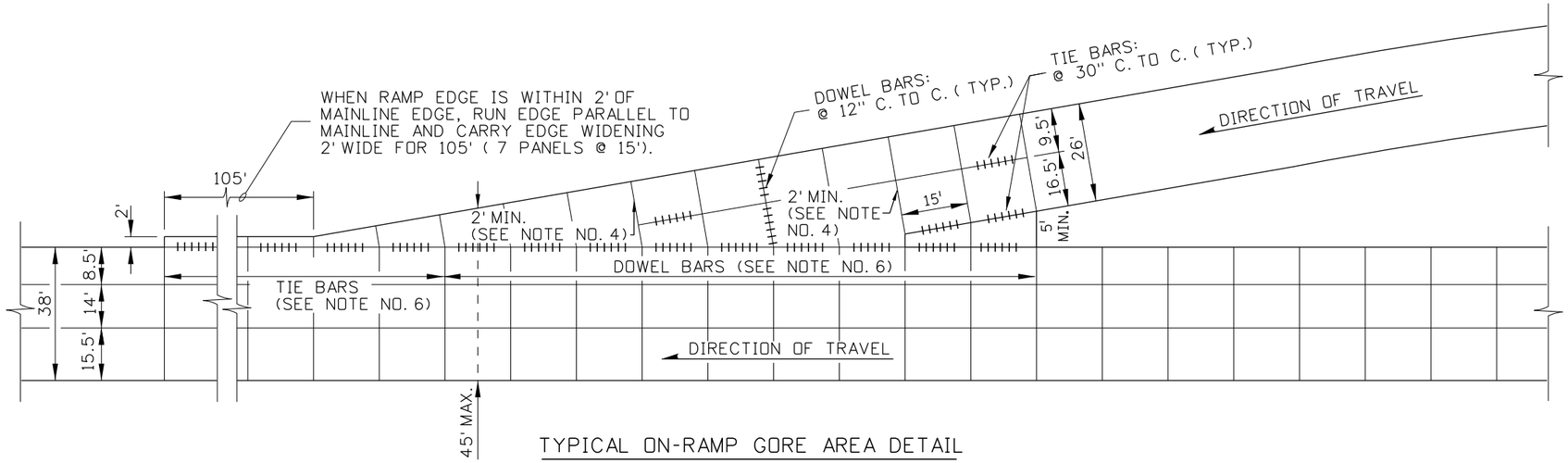

TYPICAL ON-RAMP GORE AREA DETAIL

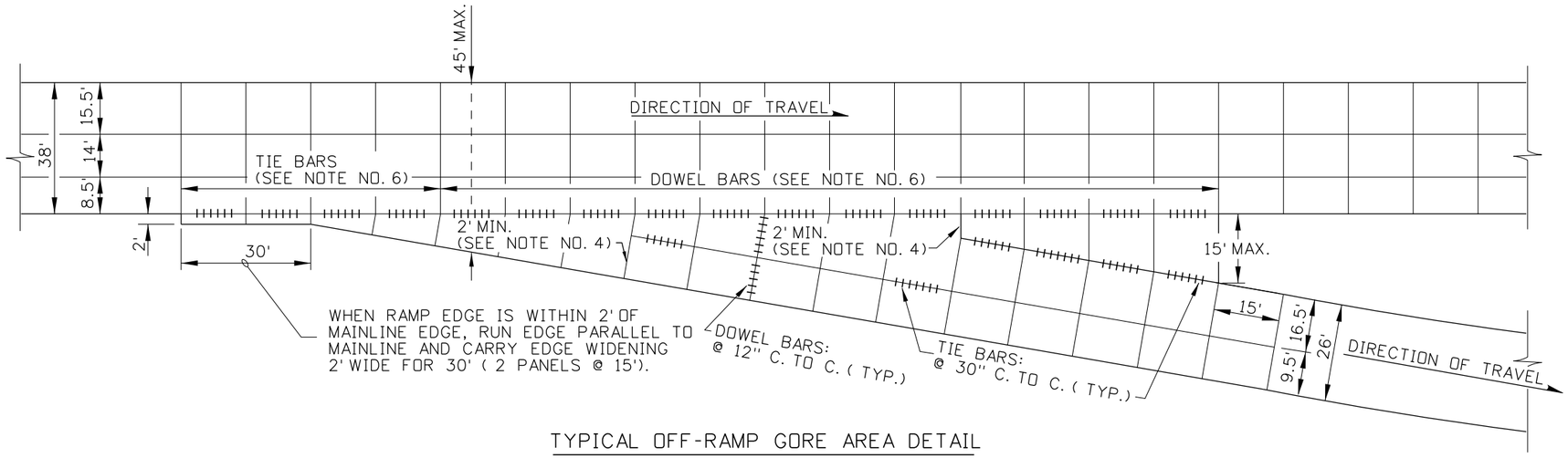

TYPICAL OFF-RAMP GORE AREA DETAIL

NOTES

1. SEE STANDARD DRAWING C-1-B FOR JOINT DETAILS, APPLICABLE NOTES, JOINT LOCATIONS, BAR AND DOWEL DETAILS.

2. THE CONTRACTOR SHALL SUPPLY SHOP DRAWINGS FOR APPROVAL BY THE ENGINEER PRIOR TO THE PLACEMENT OF CONCRETE FOR EACH RAMP GORE AREA.

3. THE MAIN LINE ROADWAY CONCRETE SHALL BE PLACED FULL WIDTH PRIOR TO PLACEMENT OF GORE AND RAMP CONCRETE.

4. LONGITUDINAL JOINTS PARALLEL TO THE RAMP CENTERLINE SHALL TERMINATE AT A TRAVERSE JOINT. AT THESE LOCATIONS, THE DISTANCE ALONG THE TRAVERSE JOINT, BETWEEN THE EDGE OF THE MAIN LINE PAVING AND THE LONGITUDINAL JOINT SHALL BE AT LEAST TWO FEET.

5. ALWAYS BEGIN AND END THE EDGE WIDENING AT A JOINT.

6. CONNECT THE NARROW PORTION OF THE RAMP TO THE MAIN ROADWAY WITH TIE BARS ALONG THE LONGITUDINAL JOINT TO THE LAST TRANSVERSE JOINT WHICH IS LESS THAN 60 FEET WIDE, THEN USE DOWEL BARS THROUGH THE REMAINDER OF THE JOINT.

7. LONGITUDINAL CONSTRUCTION JOINT BETWEEN EXISTING AND PROPOSED PAVEMENT.

8. ALL PROPOSED TRANSVERSE JOINTS SHALL BE CONSTRUCTED TO MATCH THE SPACING OF THE TRANSVERSE JOINTS IN THE ADJACENT EXISTING PAVEMENT.

9. NOT TO SCALE.

ORIGINAL STORED AT: ITD, Headquarters 3311 West State Boise, Idaho

ORIGINAL SIGNED BY: MICHAEL J. SANTI DATE ORIGINAL SIGNED: OCTOBER 21, 2011

REVISIONS

NO.	DATE	BY	NO.	DATE	BY	NO.	DATE	BY
1	6-03	MSM						
2	10-08	JRV						
3	10-10	PLR						
4	8-11	RSC						

SCALES SHOWN ARE FOR 11" X 17" PRINTS ONLY

CADD FILE NAME: c1c_1011.std

DRAWING DATE: FEBRUARY, 1996

IDAHO TRANSPORTATION DEPARTMENT

BOISE IDAHO

ORIGINAL SIGN BY: LOREN THOMAS
HIGHWAYS PROGRAM OVERSIGHT ENGINEER
ORIGINAL SIGN BY: TOM COLE
CHIEF ENGINEER

STANDARD DRAWING

RAMP GORE DETAILS

REQUIRES SHT 2 OF 2 & STD. DWG. C-1-B

English

STANDARD DRAWING NO.

C-1-C

SHEET 1 OF 2

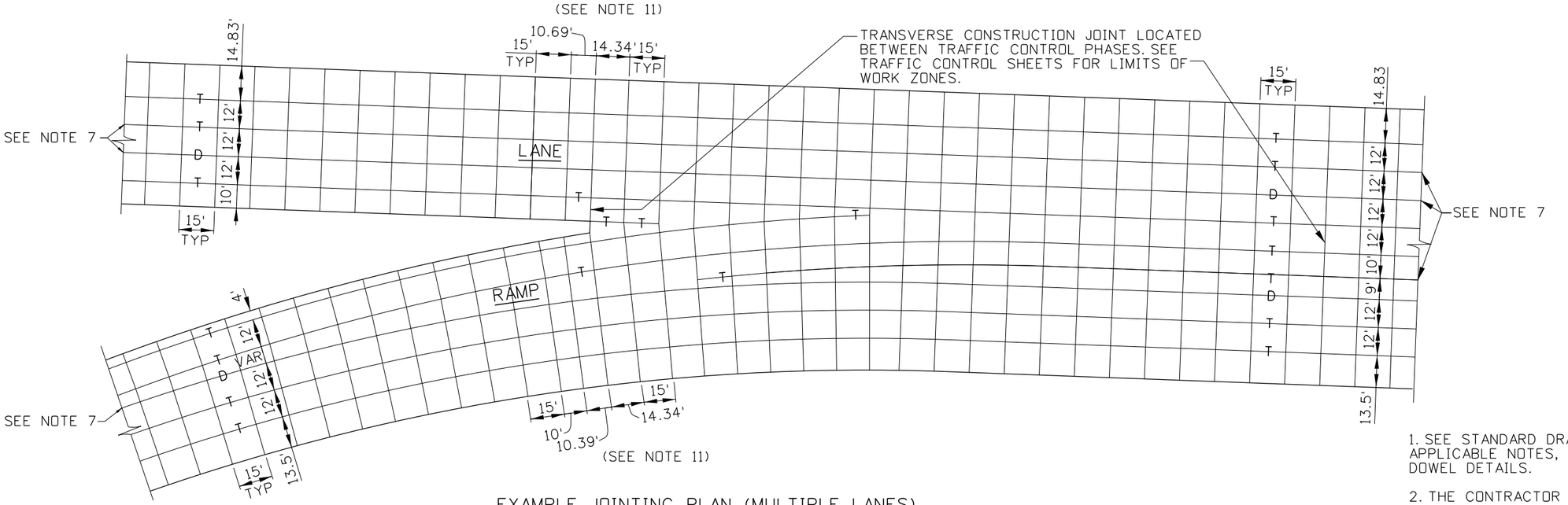

EXAMPLE JOINTING PLAN (MULTIPLE LANES)

LEGEND

T = TIED LONGITUDINAL JOINT (NO. 5 REBAR)

D = DOWELED LONGITUDINAL JOINT (SAME DOWEL DIMENSIONS AS TRANSVERSE JOINTS)

NOTES

1. SEE STANDARD DRAWING C-1-B FOR JOINT DETAILS, APPLICABLE NOTES, JOINT LOCATIONS, BAR AND DOWEL DETAILS.

2. THE CONTRACTOR SHALL SUPPLY SHOP DRAWINGS FOR APPROVAL BY THE ENGINEER PRIOR TO THE PLACEMENT OF CONCRETE FOR EACH RAMP GORE AREA.

3. THE MAIN LINE ROADWAY CONCRETE SHALL BE PLACED FULL WIDTH PRIOR TO PLACEMENT OF GORE AND RAMP CONCRETE.

4. LONGITUDINAL JOINTS PARALLEL TO THE RAMP CENTERLINE SHALL TERMINATE AT A TRAVERSE JOINT. AT THESE LOCATIONS, THE DISTANCE ALONG THE TRAVERSE JOINT, BETWEEN THE EDGE OF THE MAIN LINE PAVING AND THE LONGITUDINAL JOINT SHALL BE AT LEAST TWO FEET.

5. ALWAYS BEGIN AND END THE EDGE WIDENING AT A JOINT.

6. CONNECT THE NARROW PORTION OF THE RAMP TO THE MAIN ROADWAY WITH TIE BARS ALONG THE LONGITUDINAL JOINT TO THE LAST TRANSVERSE JOINT WHICH IS LESS THAN 60 FEET WIDE, THEN USE DOWEL BARS THROUGH THE REMAINDER OF THE JOINT.

7. LONGITUDINAL CONSTRUCTION JOINT BETWEEN EXISTING AND PROPOSED PAVEMENT.

8. ALL PROPOSED TRANSVERSE JOINTS SHALL BE CONSTRUCTED TO MATCH THE SPACING OF THE TRANSVERSE JOINTS IN THE ADJACENT EXISTING PAVEMENT.

9. ALL CONSTRUCTION JOINTS ARE TO BE TIED.

10. MAXIMUM TIED TRANSVERSE WIDTH IS 60'.

11. DIMENSIONS ARE FOR ILLUSTRATION PURPOSES ONLY.

12. NOT TO SCALE.

ORIGINAL STORED AT: ITD, Headquarters 3311 West State Boise, Idaho

ORIGINAL SIGNED BY: MICHAEL J. SANTI
DATE ORIGINAL SIGNED: OCTOBER 21, 2011

REVISIONS

NO.	DATE	BY	NO.	DATE	BY	NO.	DATE	BY
1	6-03	MSM						
2	10-08	JRV						
3	10-10	PLR						
4	8-11	RSC						

SCALES SHOWN ARE FOR 11" X 17" PRINTS ONLY

CADD FILE NAME: c1c_1011.std

DRAWING DATE: FEBRUARY, 1996

IDAHO TRANSPORTATION DEPARTMENT

BOISE IDAHO

ORIGINAL SIGN BY: LOREN THOMAS
HIGHWAYS PROGRAM OVERSIGHT ENGINEER

ORIGINAL SIGN BY: TOM COLE
CHIEF ENGINEER

STANDARD DRAWING

RAMP GORE DETAILS

REQUIRES SHT 1 OF 2 & STD. DWG. C-1-B

English

STANDARD DRAWING NO.

C-1-C

SHEET 2 OF 2

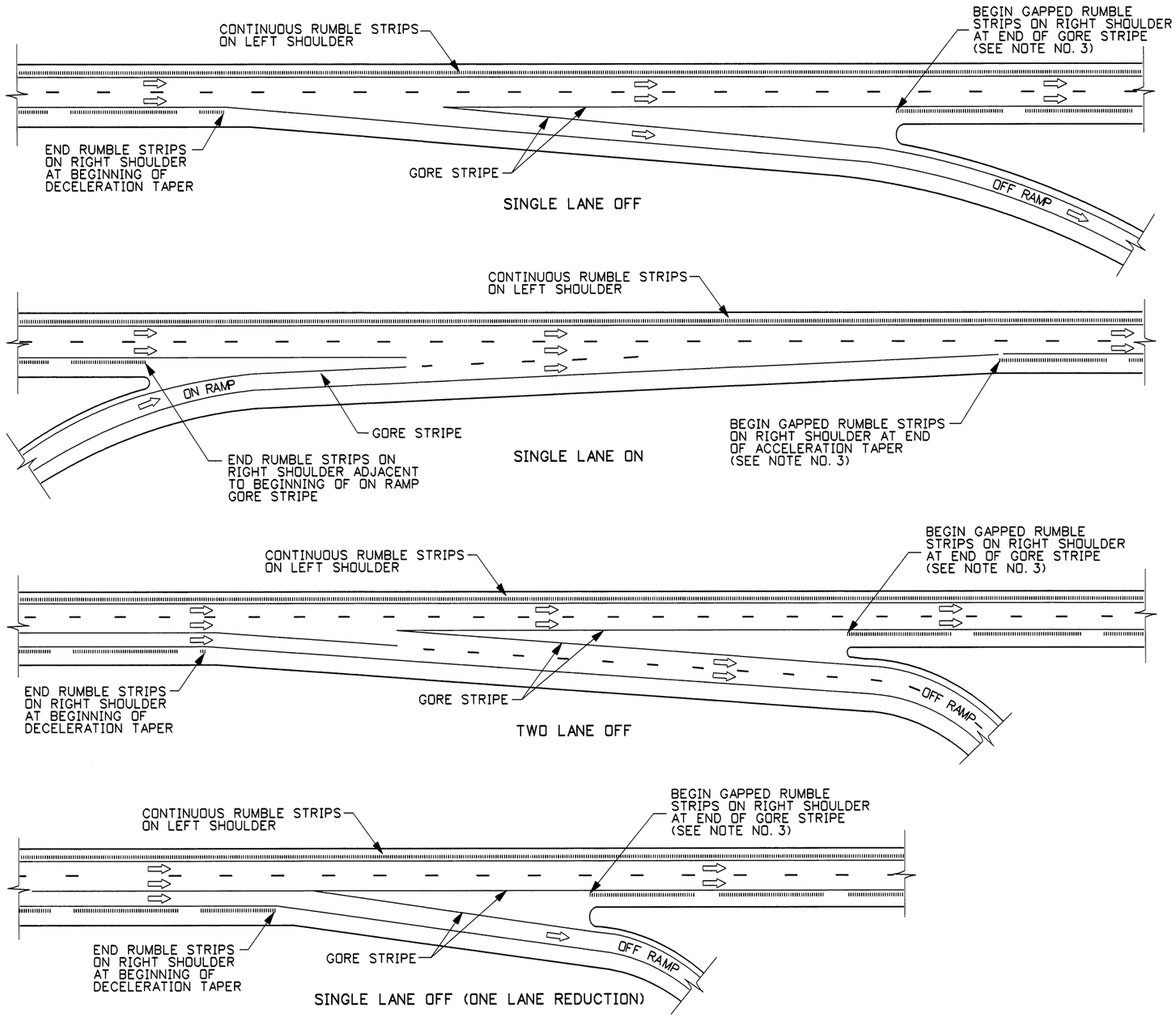

RUMBLE STRIP PLACEMENT FOR RAMP CONNECTION

(OPTION A SHOWN)

REVISIONS								
NO.	DATE	BY	NO.	DATE	BY	NO.	DATE	BY
1	9-02	MSM						
2	11-04	MSM						

SCALES SHOWN ARE FOR 11" X 17" PRINTS ONLY

CADD FILE NAME c2a_1104.std

DRWG. ORIG. DATE: NOVEMBER, 2000

IDAHO TRANSPORTATION DEPARTMENT

BOISE IDAHO

ASSISTANT CHIEF ENGINEER (DEVELOPMENT)

CHIEF ENGINEER

STANDARD DRAWING

RUMBLE STRIPS FOR MULTI-LANE ROADWAYS OPTIONS A & B

REQUIRES SHEET 2 OF 2

English

STANDARD DRWG. NO.

C-2-A

SHEET 1 OF 2

PROFESSIONAL ENGINEER REGISTERED 2240 11/5/04 STATE OF IDAHO MILFORD L. MILLER

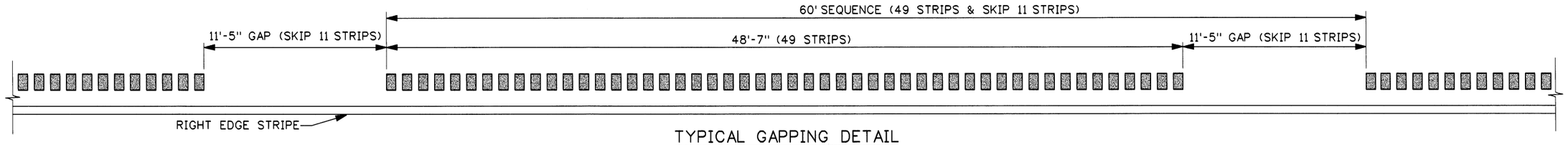

TYPICAL GAPPING DETAIL

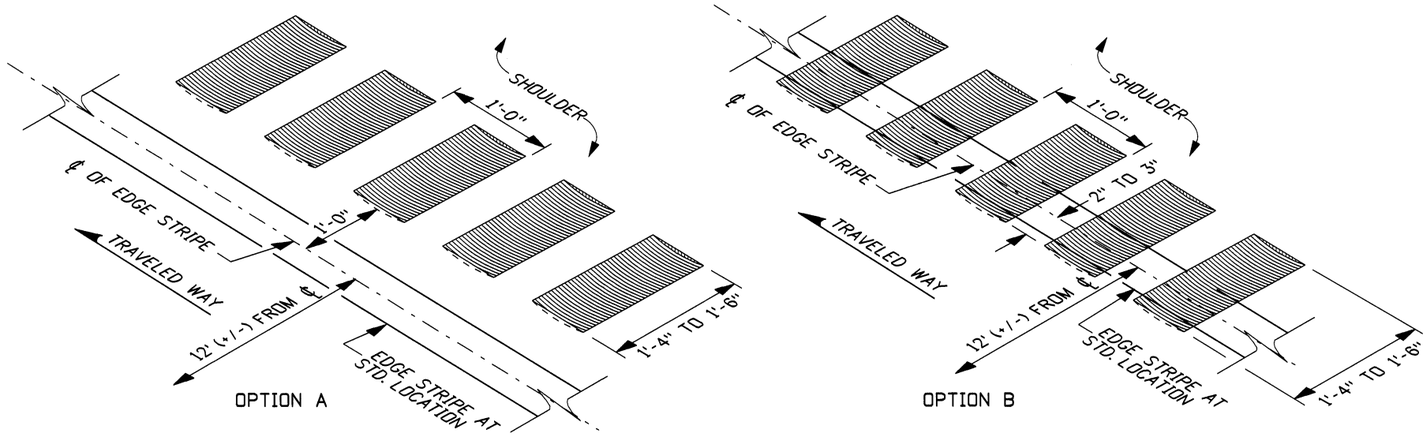

TYPICAL SHOULDER INSTALLATION

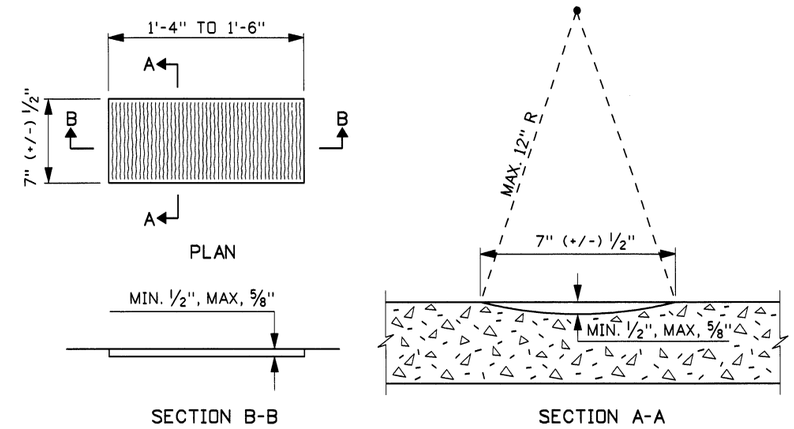

RUMBLE STRIP DETAILS

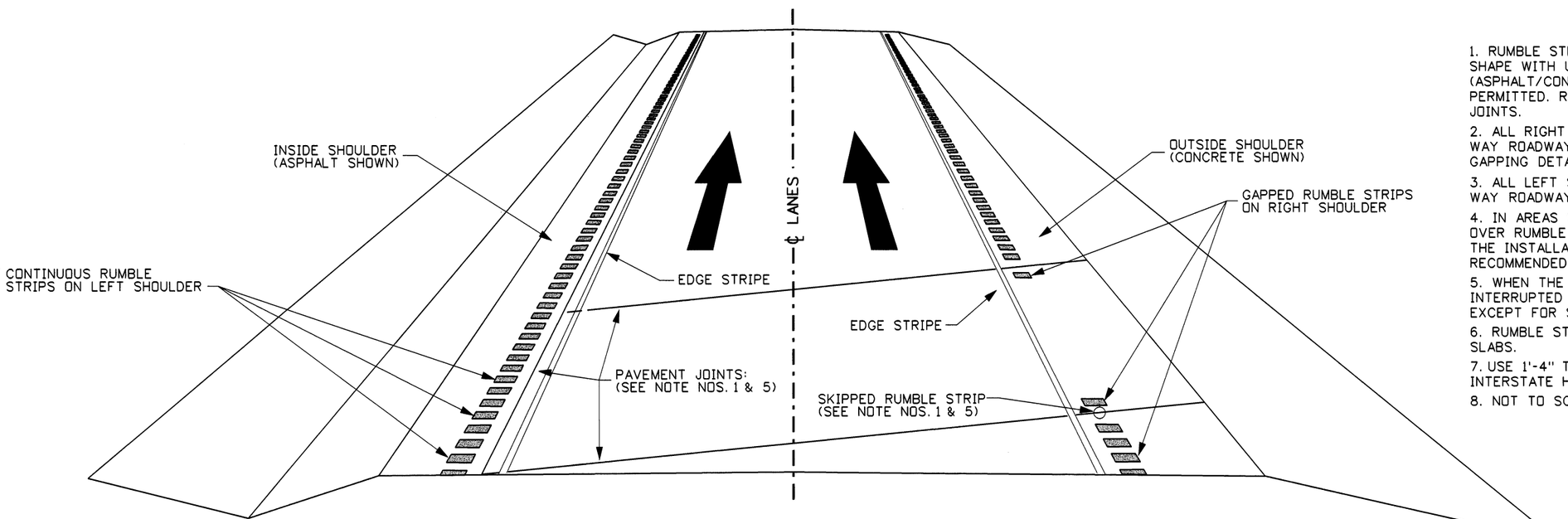

PERSPECTIVE VIEW (MULTI-LANE ROADWAY)

(OPTION A SHOWN)

NOTES

1. RUMBLE STRIPS SHALL BE MILLED TO LEAVE A RECTANGULAR SHAPE WITH UNIFORM EDGES. DAMAGE TO THE ADJACENT PAVEMENT (ASPHALT/CONCRETE) DURING THE MILLING PROCESS SHALL NOT BE PERMITTED. RUMBLE STRIPS SHALL NOT BE PLACED ON PAVEMENT JOINTS.
2. ALL RIGHT SHOULDER RUMBLE STRIPS ON INTERSTATE AND ONE WAY ROADWAYS SHALL BE GAPPED ACCORDING TO THE "TYPICAL GAPPING DETAIL".
3. ALL LEFT SHOULDER RUMBLE STRIPS ON INTERSTATE AND ONE WAY ROADWAYS SHALL BE CONTINUOUS.
4. IN AREAS WHERE BICYCLE TRAFFIC IS ANTICIPATED TO CROSS-OVER RUMBLE STRIPS, EITHER ON THE RIGHT OR LEFT SHOULDER, THE INSTALLATION OF A 6' TO 12' GAP IN THE STRIPS IS RECOMMENDED.
5. WHEN THE SEQUENCE OF GAPPED RUMBLE STRIPS IS HALTED OR INTERRUPTED RESTART THE SEQUENCE (49 STRIPS & SKIP 11 STRIPS) EXCEPT FOR SKIPPING PAVEMENT JOINTS.
6. RUMBLE STRIPS ARE NOT ALLOWED ON STRUCTURES OR APPROACH SLABS.
7. USE 1'-4" TO 1'-6" WIDE (TRAVERSE WIDTH) RUMBLE STRIPS ON INTERSTATE HIGHWAYS AND DIVIDED HIGHWAYS.
8. NOT TO SCALE.

REVISIONS

NO.	DATE	BY	NO.	DATE	BY	NO.	DATE	BY
1	9-02	MSM						
2	11-04	MSM						

SCALES SHOWN ARE FOR 11" X 17" PRINTS ONLY

CADD FILE NAME c2a_1104.std

DRWG. ORIG. DATE: NOVEMBER, 2000

IDAHO TRANSPORTATION DEPARTMENT

BOISE IDAHO

ASSISTANT CHIEF ENGINEER (DEVELOPMENT)

CHIEF ENGINEER

STANDARD DRAWING

RUMBLE STRIPS FOR MULTI-LANE ROADWAYS OPTIONS A & B

REQUIRES SHEET 1 OF 2

English

STANDARD DRWG. NO.

C-2-A

SHEET 2 OF 2

PROFESSIONAL ENGINEER REGISTERED 2240 11/5/04 STATE OF IDAHO MILFORD L. MILLER

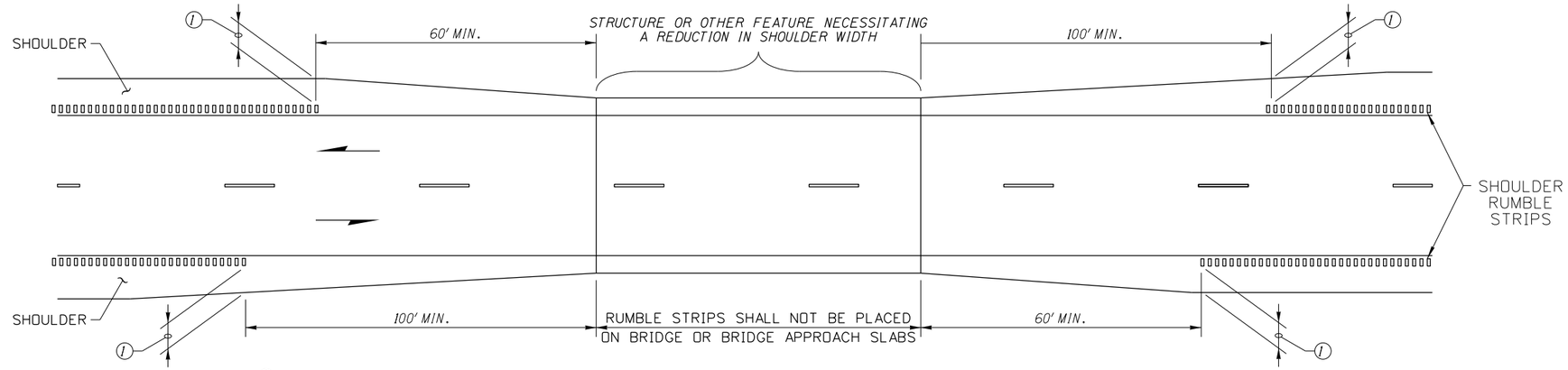

(1) SEE DESIGN MANUAL FOR APPROPRIATE SHOULDER WIDTHS AND BICYCLE CONSIDERATIONS.

SHOULDER TAPERS

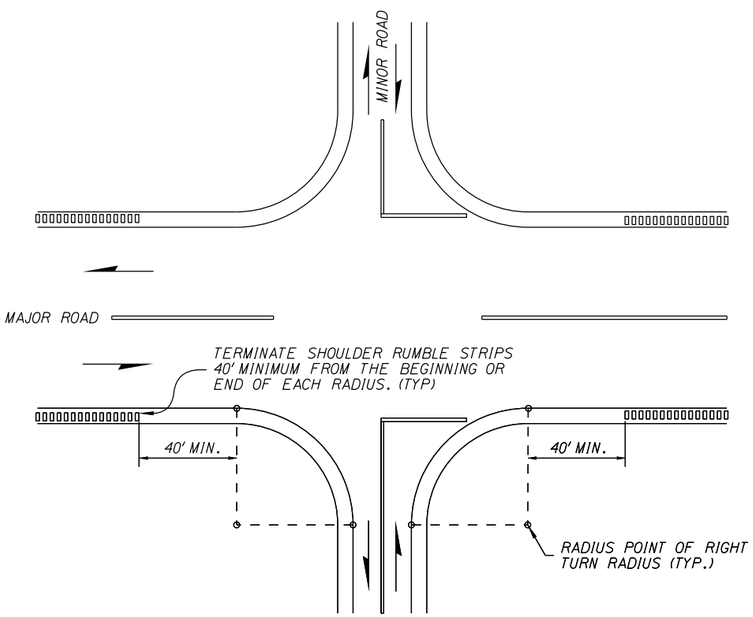

RUMBLE STRIP PLACEMENT
AT INTERSECTIONS

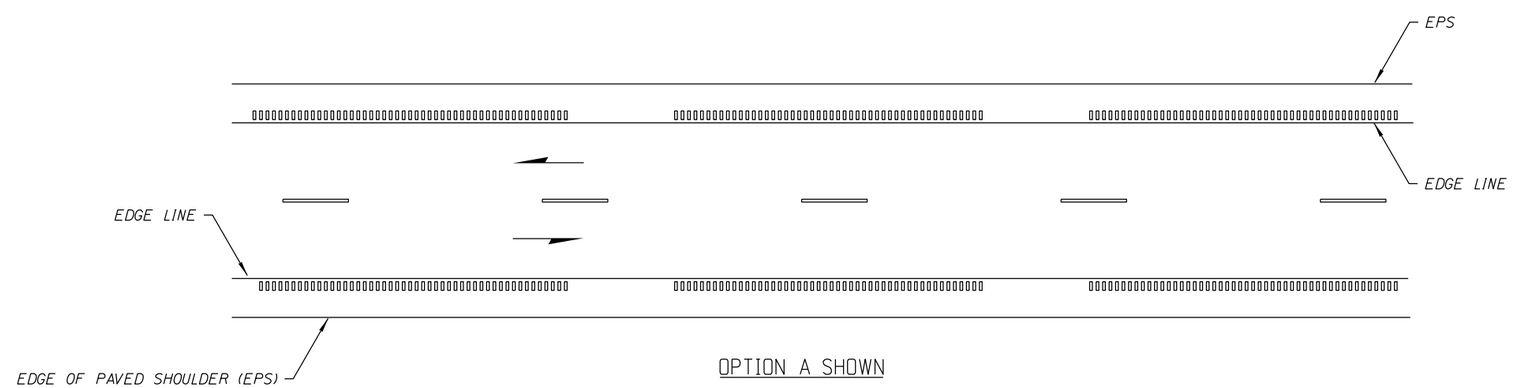

OPTION A SHOWN

SHOULDER RUMBLE STRIP PLACEMENT FOR TWO-WAY ROADWAYS

ORIGINAL STORED AT: ITD, Headquarters 3311 West State Boise, Idaho

ORIGINAL SIGNED BY: TED E. MASON
DATE ORIGINAL SIGNED: NOVEMBER 23, 2011

REVISIONS								
NO.	DATE	BY	NO.	DATE	BY	NO.	DATE	BY
1	9-11	JDA						

SCALES SHOWN ARE FOR 11" X 17" PRINTS ONLY

CADD FILE NAME: c2b_0911.std

DRAWING DATE: NOVEMBER, 2000

IDAHO TRANSPORTATION DEPARTMENT

BOISE IDAHO

ORIGINAL SIGN BY: LOREN THOMAS
HIGHWAYS PROGRAM OVERSIGHT ENGINEER
ORIGINAL SIGN BY: TOM COLE
CHIEF ENGINEER

STANDARD DRAWING

SHOULDER RUMBLE STRIPS FOR TWO-WAY ROADWAYS OPTIONS A&B

English

STANDARD DRAWING NO.
C-2-B

SHEET 1 OF 2

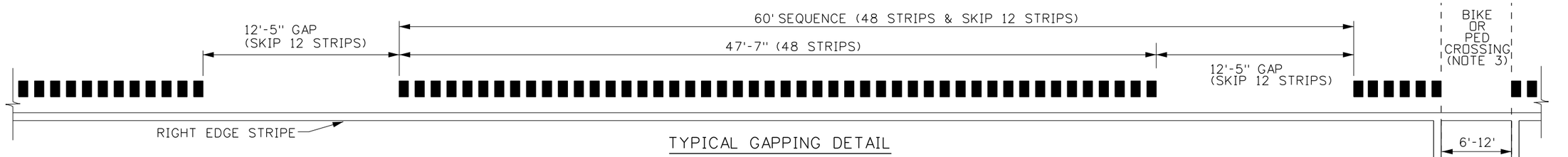

TYPICAL GAPPING DETAIL

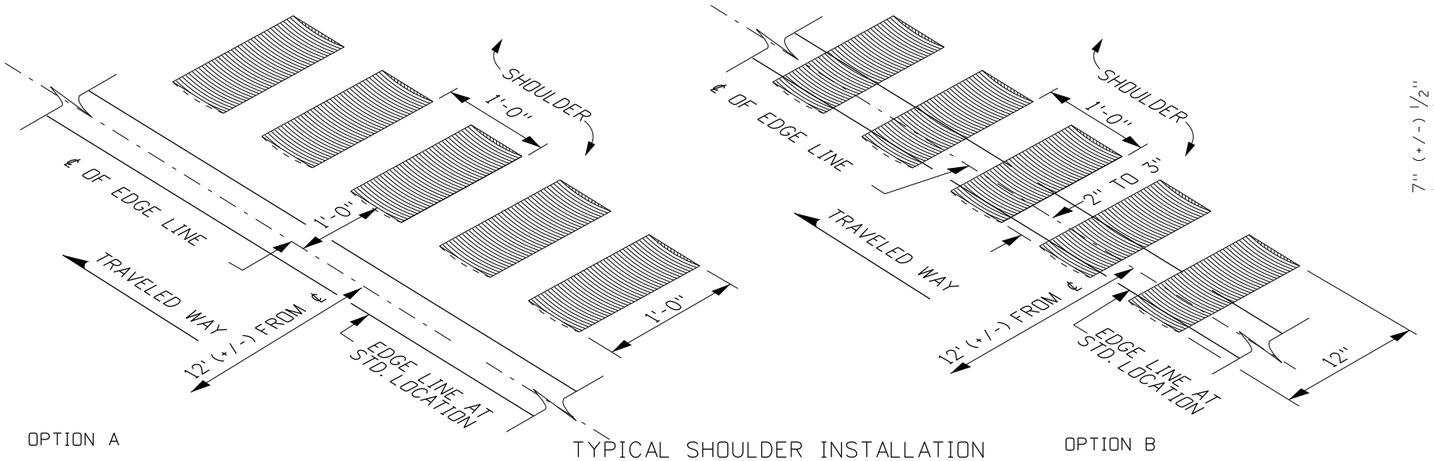

TYPICAL SHOULDER INSTALLATION

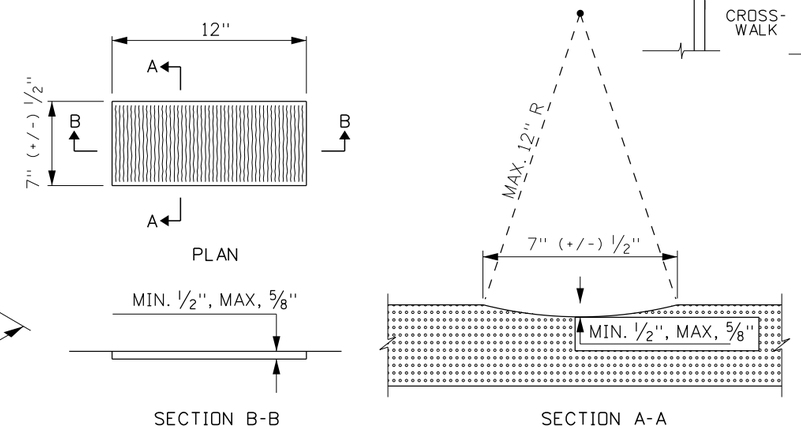

RUMBLE STRIP DETAILS

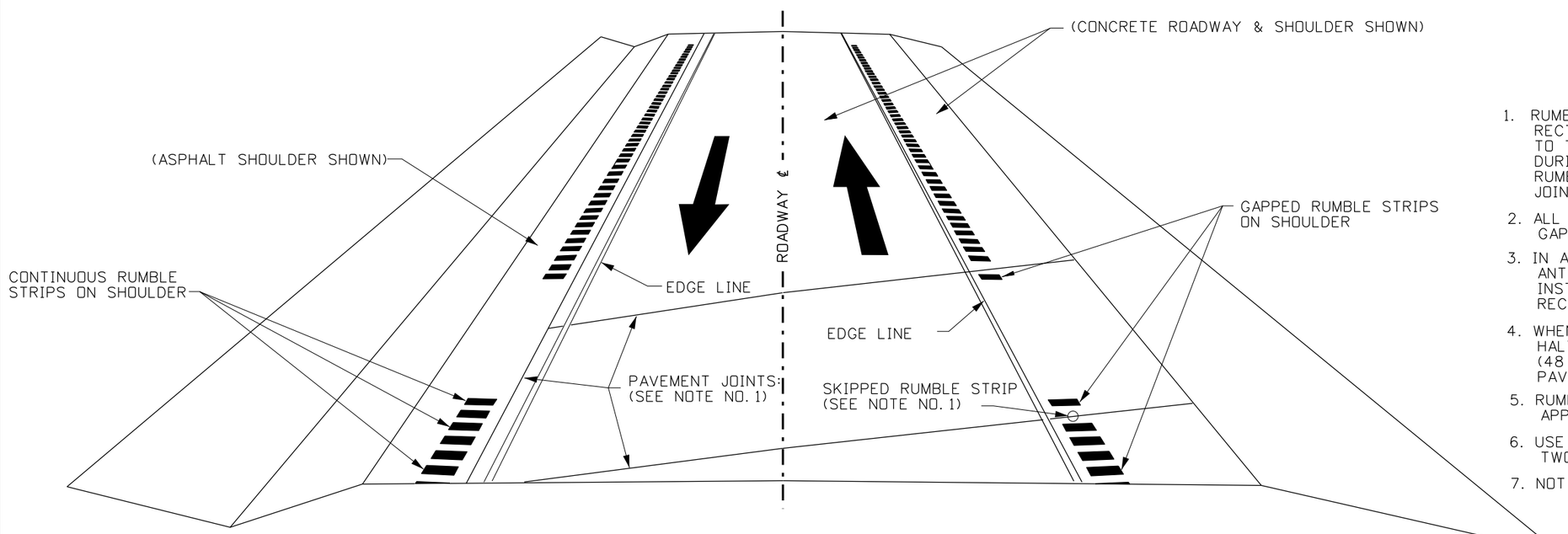

PERSPECTIVE VIEW (TWO-WAY ROADWAY)

NOTES

1. RUMBLE STRIPS SHALL BE MILLED TO LEAVE A RECTANGULAR SHAPE WITH UNIFORM EDGES.DAMAGE TO THE ADJACENT PAVEMENT (ASPHALT/CONCRETE) DURING THE MILLING PROCESS SHALL NOT BE PERMITTED. RUMBLE STRIPS SHALL NOT BE PLACED ON PAVEMENT JOINTS.
2. ALL RUMBLE STRIPS ON TWO-WAY ROADWAYS SHALL BE GAPPED ACCORDING TO THE "TYPICAL GAPPING DETAIL".
3. IN AREAS WHERE BICYCLE OR PEDESTRIAN TRAFFIC IS ANTICIPATED TO CROSS-OVER RUMBLE STRIPS THE INSTALLATION OF A 6' TO 12' GAP IN THE STRIPS IS RECOMMENDED. REFER TO TYPICAL GAPPING DETAIL.
4. WHEN THE SEQUENCE OF GAPPED RUMBLE STRIPS IS HALTED OR INTERRUPTED RESTART THE SEQUENCE (48 STRIPS & SKIP 12 STRIPS) EXCEPT FOR SKIPPING PAVEMENT JOINTS.
5. RUMBLE STRIPS ARE NOT ALLOWED ON STRUCTURES OR APPROACH SLABS.
6. USE 12" WIDE (TRAVERSE WIDTH) RUMBLE STRIPS ON TWO-WAY ROADWAYS.
7. NOT TO SCALE.

ORIGINAL STORED AT: ITD, Headquarters 3311 West State Boise, Idaho

ORIGINAL SIGNED BY: TED E. MASON
DATE ORIGINAL SIGNED: NOVEMBER 23, 2011

REVISIONS								
NO.	DATE	BY	NO.	DATE	BY	NO.	DATE	BY
1	9-02	HEB						
2	12-04	MSM						
3	09-11	JDA						

SCALES SHOWN ARE FOR 11" X 17" PRINTS ONLY

CADD FILE NAME: c2b_0911.std

DRAWING DATE: NOVEMBER, 2000

IDAHO TRANSPORTATION DEPARTMENT

BOISE IDAHO

ORIGINAL SIGN BY: LOREN THOMAS
HIGHWAYS PROGRAM OVERSIGHT ENGINEER

ORIGINAL SIGN BY: TOM COLE
CHIEF ENGINEER

STANDARD DRAWING

SHOULDER RUMBLE STRIPS FOR TWO-WAY ROADWAYS OPTIONS A&B

English

STANDARD DRAWING NO.

C-2-B

SHEET 2 OF 2

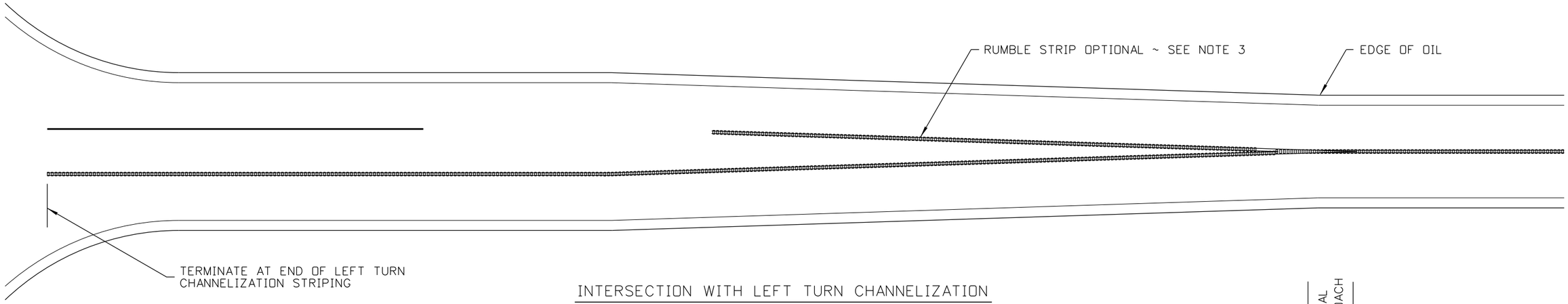

INTERSECTION WITH LEFT TURN CHANNELIZATION

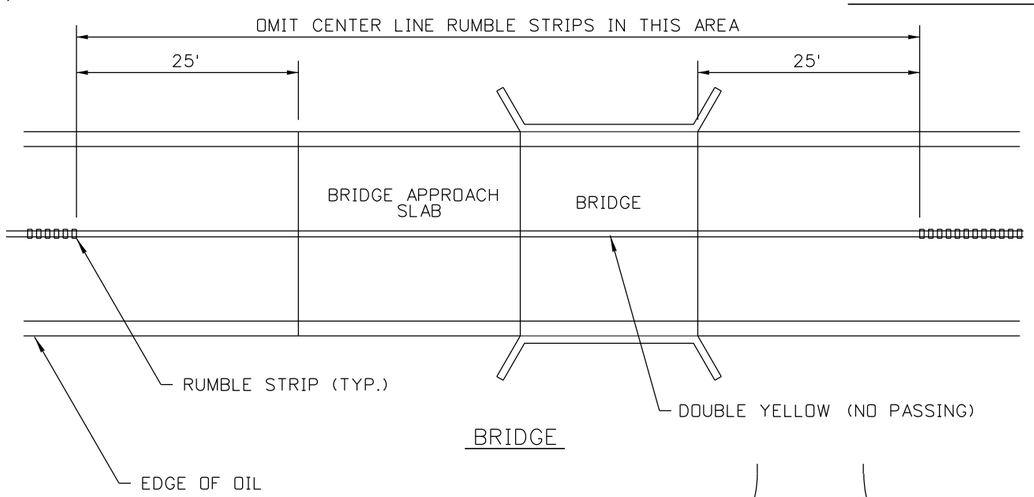

BRIDGE

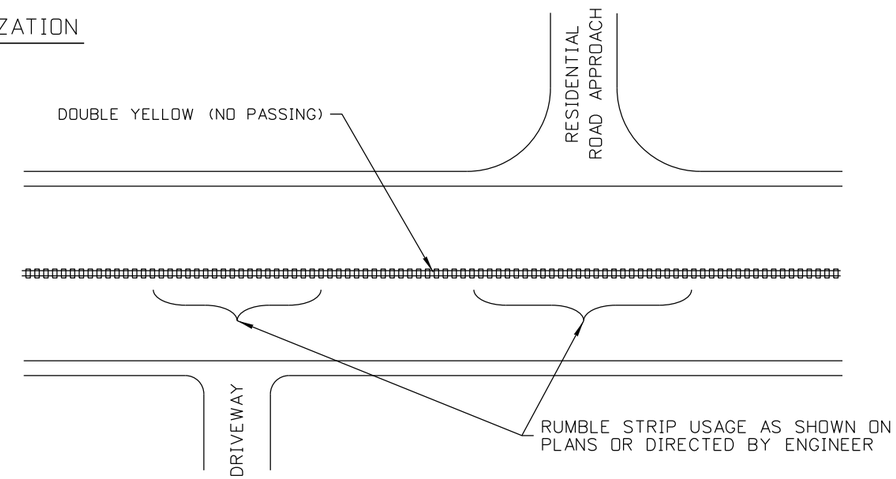

PRIVATE ROAD APPROACHES

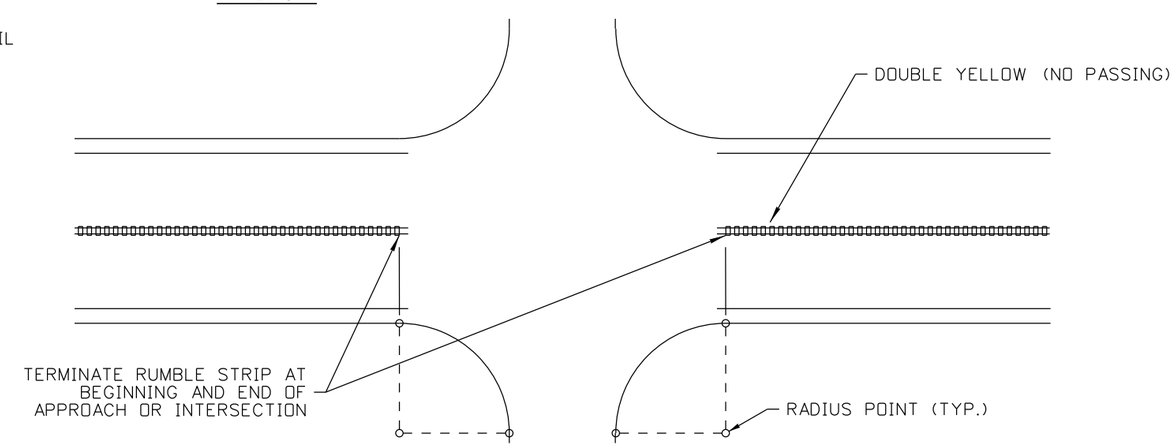

PUBLIC ROAD APPROACHES

NOTES

1. CENTERLINE RUMBLE STRIPS SHALL NOT BE INSTALLED IN PASSING AREAS UNLESS SPECIFIED ON THE PLANS OR APPROVED BY THE ENGINEER.

2. RUMBLE STRIPS ARE NOT ALLOWED ON STRUCTURES OR APPROACH SLABS.

3. WHEN DIRECTED BY THE ENGINEER, RUMBLE STRIPS MAY BE INSTALLED ALONG THE TURN POCKET TAPER WHERE THERE IS A HISTORY OF REAR END COLLISIONS IN THE TURN POCKET.

4. NOT TO SCALE

ORIGINAL STORED AT: ITD, Headquarters 3311 West State Boise, Idaho

ORIGINAL SIGNED BY: TED E. MASON
DATE ORIGINAL SIGNED: SEPTEMBER 13, 2011

REVISIONS

NO.	DATE	BY	NO.	DATE	BY	NO.	DATE	BY
1	9-11	JDA						

SCALES SHOWN ARE FOR 11" X 17" PRINTS ONLY

CADD FILE NAME: c2c_0911.std

DRAWING DATE: SEPTEMBER, 2011

IDAHO TRANSPORTATION DEPARTMENT

BOISE IDAHO

ORIGINAL SIGN BY: LOREN THOMAS
HIGHWAYS PROGRAM OVERSIGHT ENGINEER

ORIGINAL SIGN BY: TOM COLE
CHIEF ENGINEER

STANDARD DRAWING

CENTERLINE RUMBLE STRIPS FOR TWO-WAY ROADWAYS

English

STANDARD DRAWING NO.

C-2-C

SHEET 1 OF 2

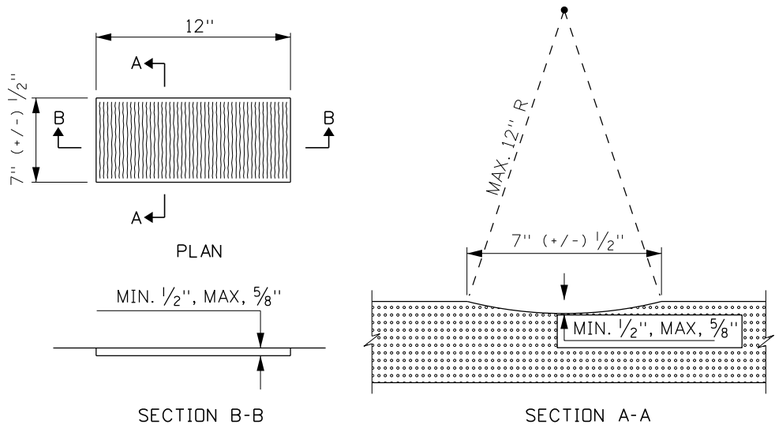

RUMBLE STRIP DETAILS

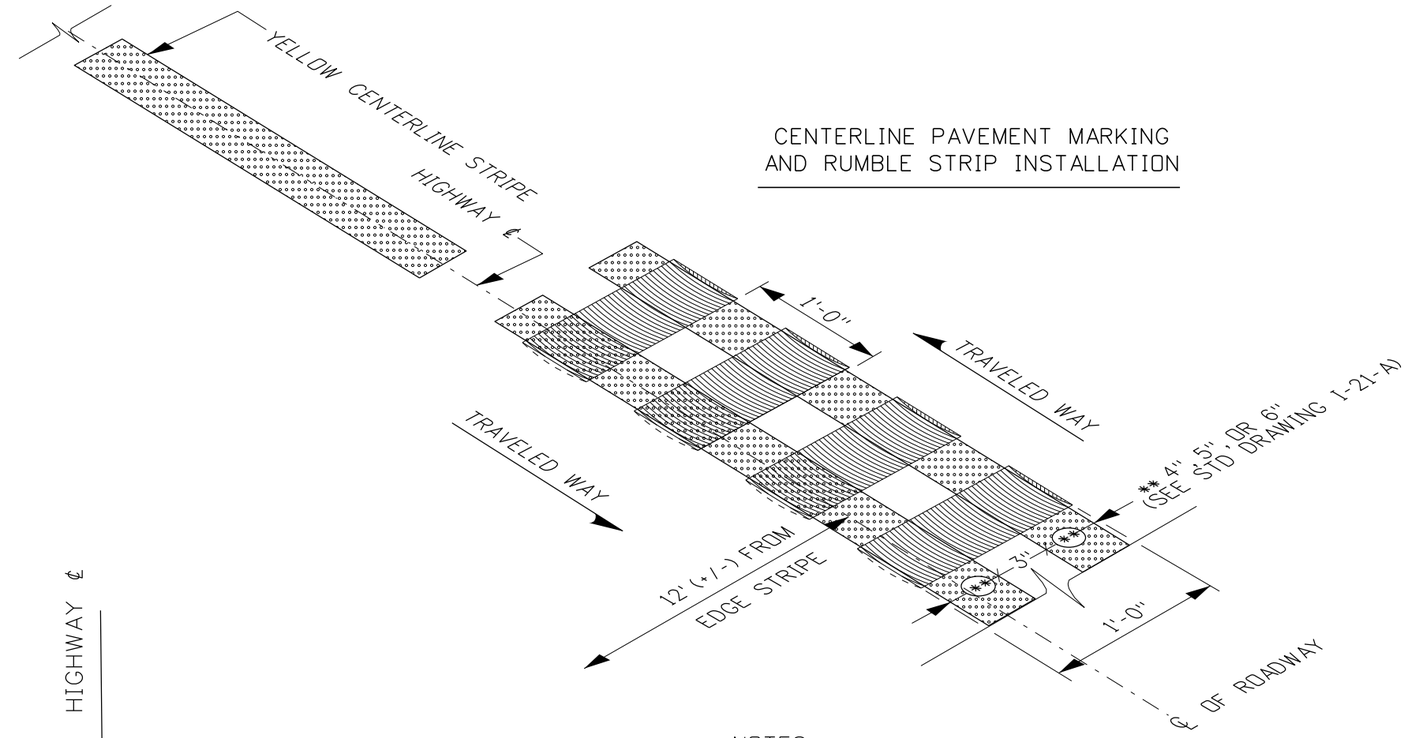

CENTERLINE PAVEMENT MARKING
AND RUMBLE STRIP INSTALLATION

NOTES

1. RUMBLE STRIPS SHALL BE MILLED TO LEAVE A RECTANGULAR SHAPE WITH UNIFORM EDGES.

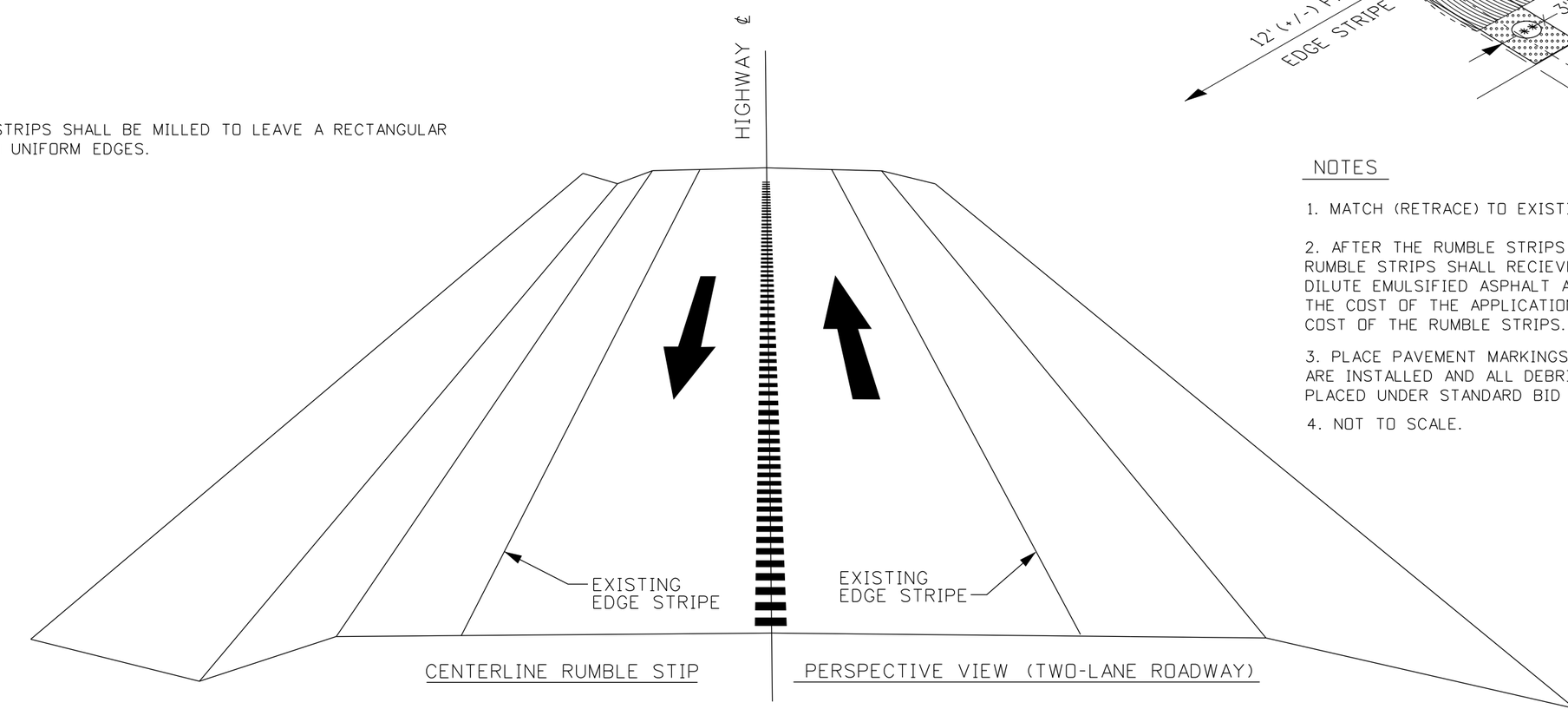

CENTERLINE RUMBLE STIP

PERSPECTIVE VIEW (TWO-LANE ROADWAY)

NOTES

1. MATCH (RETRACE) TO EXISTING PAVEMENT MARKING LOCATIONS.

2. AFTER THE RUMBLE STRIPS HAVE BEEN CLEANED, THE RUMBLE STRIPS SHALL RECIEVE AN APPLICATION OF CSS-1 DILUTE EMULSIFIED ASPHALT AT THE RATE OF 0.08 GAL/SY. THE COST OF THE APPLICATION SHALL BE INCIDENTAL TO COST OF THE RUMBLE STRIPS.

3. PLACE PAVEMENT MARKINGS AFTER CENTERLINE RUMBLE STRIPS ARE INSTALLED AND ALL DEBRIS IS CLEARED. PAVEMENT MARKINGS PLACED UNDER STANDARD BID ITEM S900-60A OR BY STATE FORCES.

4. NOT TO SCALE.

ORIGINAL STORED AT: ITD, Headquarters 3311 West State Boise, Idaho

ORIGINAL SIGNED BY: TED E. MASON
DATE ORIGINAL SIGNED: SEPTEMBER 13, 2011

REVISIONS								
NO.	DATE	BY	NO.	DATE	BY	NO.	DATE	BY
1	09-11	JDA						

SCALES SHOWN ARE FOR 11" X 17" PRINTS ONLY

CADD FILE NAME: c2c_0911.std

DRAWING DATE: SEPTEMBER, 2011

IDAHO TRANSPORTATION DEPARTMENT

BOISE IDAHO

ORIGINAL SIGN BY: LOREN THOMAS
HIGHWAYS PROGRAM OVERSIGHT ENGINEER
ORIGINAL SIGN BY: TOM COLE
CHIEF ENGINEER

STANDARD DRAWING

CENTERLINE RUMBLE STRIPS FOR TWO-WAY ROADWAYS

English

STANDARD DRAWING NO.

C-2-C

SHEET 2 OF 2

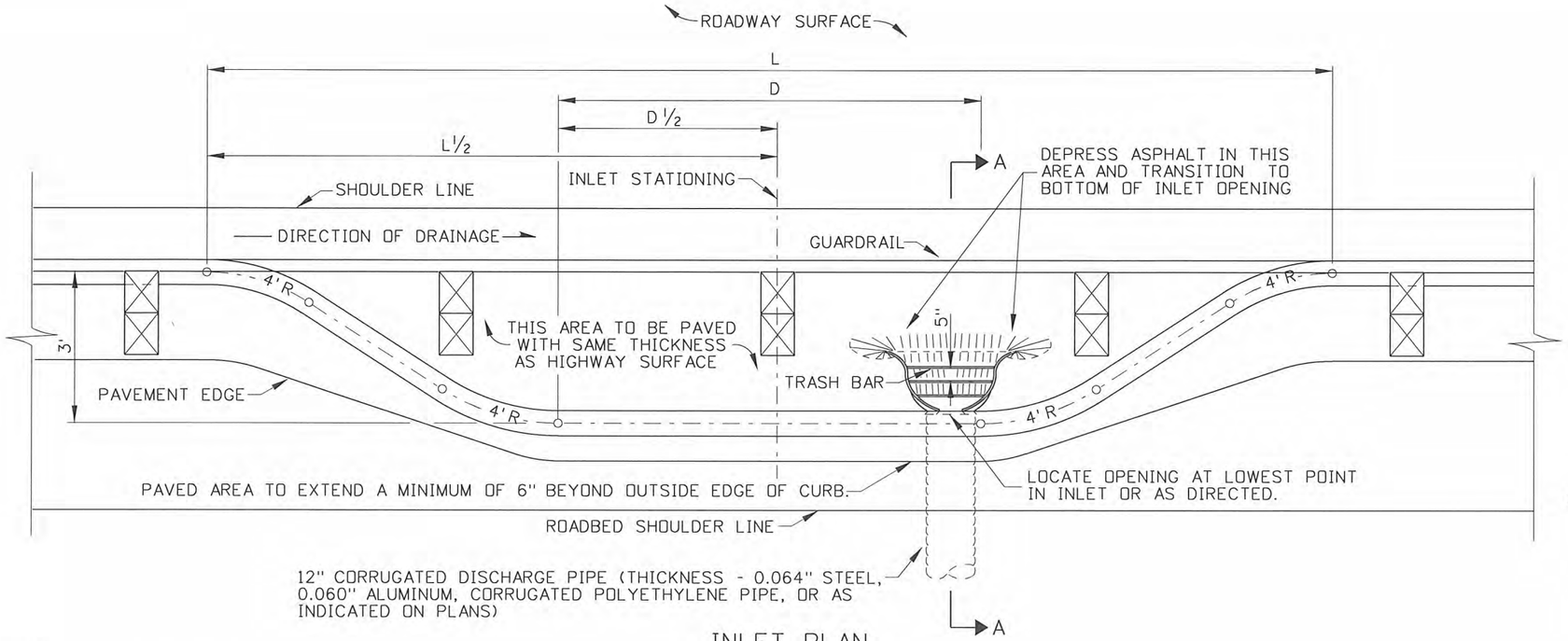

INLET PLAN

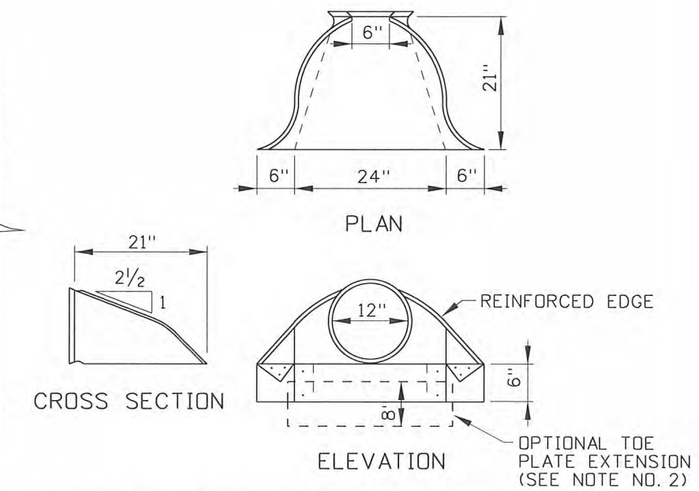

METAL ENTRANCE AND EXIT SECTIONS

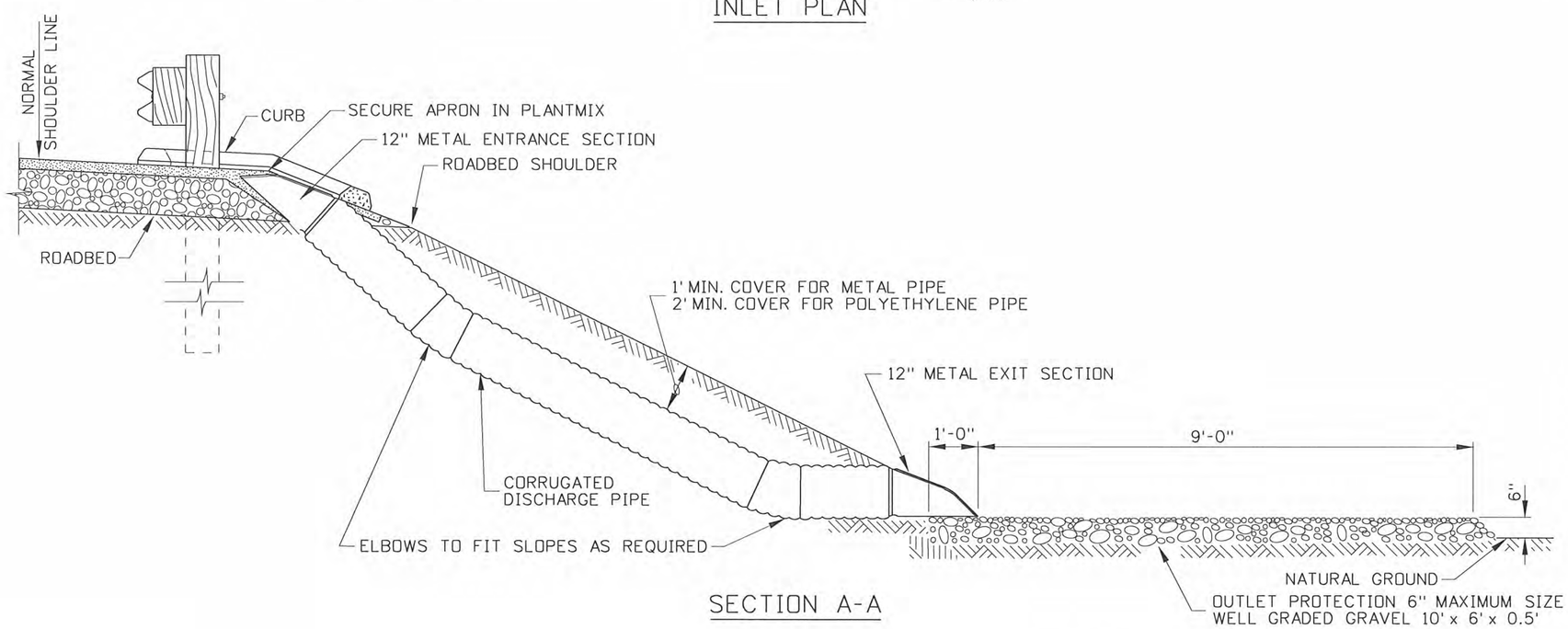

SECTION A-A

DIMENSION TABLE FOR EMBANKMENT PROTECTOR		
TYPE	L	D
1	20'	6'
2	30'	16'
3	40'	26'
4	50'	36'
5	60'	46'
6	80'	66'

NOTES

1. REFER TO STANDARD DRAWING G-1-A-1 & G-1-A-2 FOR W-BEAM GUARDRAIL INSTALLATIONS AND W-BEAM HARDWARE DETAILS. REFER TO STANDARD DRAWING D-5 FOR METAL APRON DETAILS.

2. A GALVANIZED TOE PLATE IS AVAILABLE AS AN ACCESSORY. WHEN SPECIFIED IT SHALL BE THE SAME GAGE AS THE APRON.

3. FOR FURTHER INFORMATION ON RUNOFF DRAIN OR EMBANKMENT PROTECTOR REFER TO THE ITD DESIGN MANUAL.

REVISIONS								
NO.	DATE	BY	NO.	DATE	BY	NO.	DATE	BY
1	4-64		6	7-92	MSM	11	12-04	MSM
2	8-65		7	4-93	MSM	12	9-10	PLR
3	3-67		8	12-93	MSM			
4	1-74		9	6-97	MSM			
5	5-77		10	7-02	MSM			

SCALES SHOWN ARE FOR 11" X 17" PRINTS ONLY

CADD FILE NAME: d1a_1010.std

DRAWING DATE: APRIL, 1964

IDAHO TRANSPORTATION DEPARTMENT

BOISE IDAHO

ASSISTANT CHIEF ENGINEER (DEVELOPMENT)

CHIEF ENGINEER

STANDARD DRAWING

RUNOFF DRAIN OR EMBANKMENT PROTECTOR

English

STANDARD DRAWING NO.

D-1-A

SHEET 1 OF 1

PROFESSIONAL ENGINEER REGISTERED 6506 STATE OF IDAHO TED E. MASON 10/26/2010

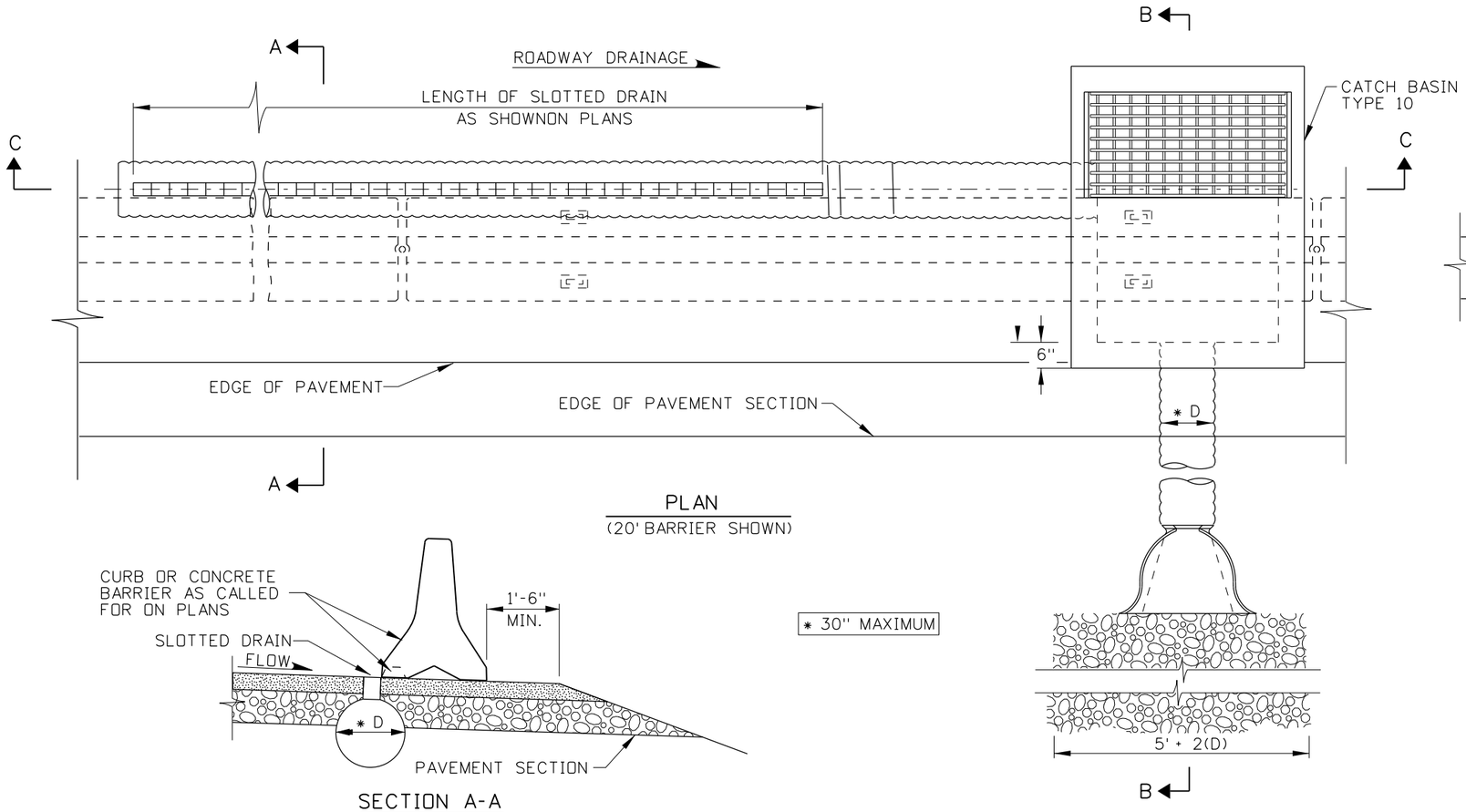

PLAN
(20' BARRIER SHOWN)

SECTION A-A

* 30" MAXIMUM

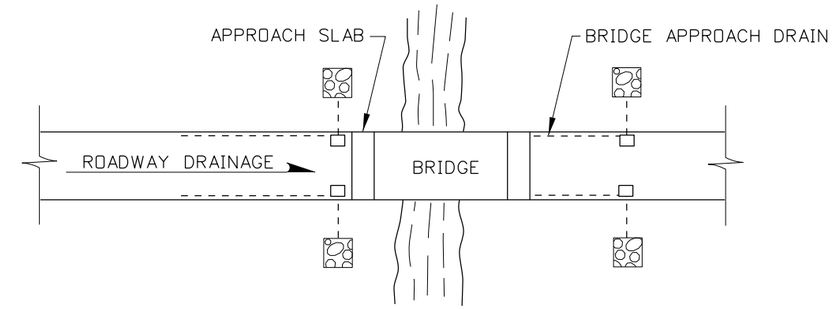

LOCATION SKETCH

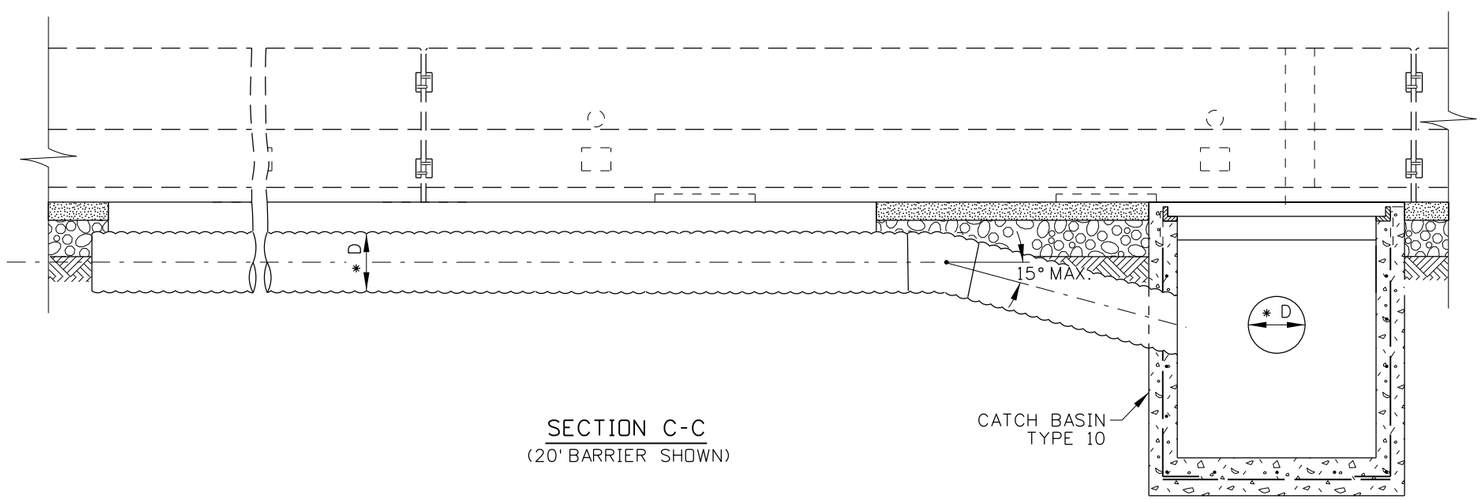

SECTION C-C
(20' BARRIER SHOWN)

NOTES

1. LOCATE CATCH BASINS TO INTERCEPT ROADWAY DRAINAGE PRIOR TO FLOWING ONTO A BRIDGE AND INTERCEPT DRAINAGE THAT HAS COLLECTED ON BRIDGE OR AS SHOWN ON THE PLANS.

2. SEE THE DESIGN MANUAL FOR FURTHER INFORMATION ON RUNOFF DRAIN OR EMBANKMENT PROTECTOR.

3. USE CONCRETE BARRIER WITH SEALED SCUPPERS ON THE UPSTREAM FROM THE GRATE OPENING. USE GROUT OR PLANT MIX TO SEAL THE SCUPPERS ALONG THE DRAIN RUNOFF AREA. 10' OR 20' CONCRETE BARRIER MAY BE USED.

4. DO NOT USE IN TEMPORARY OR PERMANENT TRAFFIC LANES. USE ONLY WHERE TRAFFIC IS OCCASIONAL, SUCH AS ON HIGHWAY SHOULDERS.

5. NOT TO SCALE.

ORIGINAL STORED
AT: ITD,
Headquarters
3311 West State
Boise, Idaho

ORIGINAL SIGNED BY:
RYAN D. LANCASTER
DATE ORIGINAL SIGNED:
JANUARY 31, 2013

REVISIONS

NO.	DATE	BY	NO.	DATE	BY	NO.	DATE	BY
1	12-01	MSM						
2	7-02	MSM						
3	3-05	MSM						
4	9-10	PLR						
5	12-12	RDL						

SCALES SHOWN ARE FOR 11" X 17" PRINTS ONLY

CADD FILE NAME: dlb_0213.std

DRAWING DATE: DECEMBER, 1993

IDAHO TRANSPORTATION DEPARTMENT

BOISE IDAHO

ORIGINAL SIGNED BY: LOREN THOMAS
HIGHWAYS PROGRAM OVERSIGHT ENGINEER

ORIGINAL SIGNED BY: TOM COLE
CHIEF ENGINEER

STANDARD DRAWING

RUNOFF DRAIN OR EMBANKMENT PROTECTOR WITH SLOTTED DRAIN

REQUIRES SHEET 2 OF 2 &
STD. DWGS. D-5 & E-6-H

English

STANDARD DRAWING NO.

D-1-B

SHEET 1 OF 2

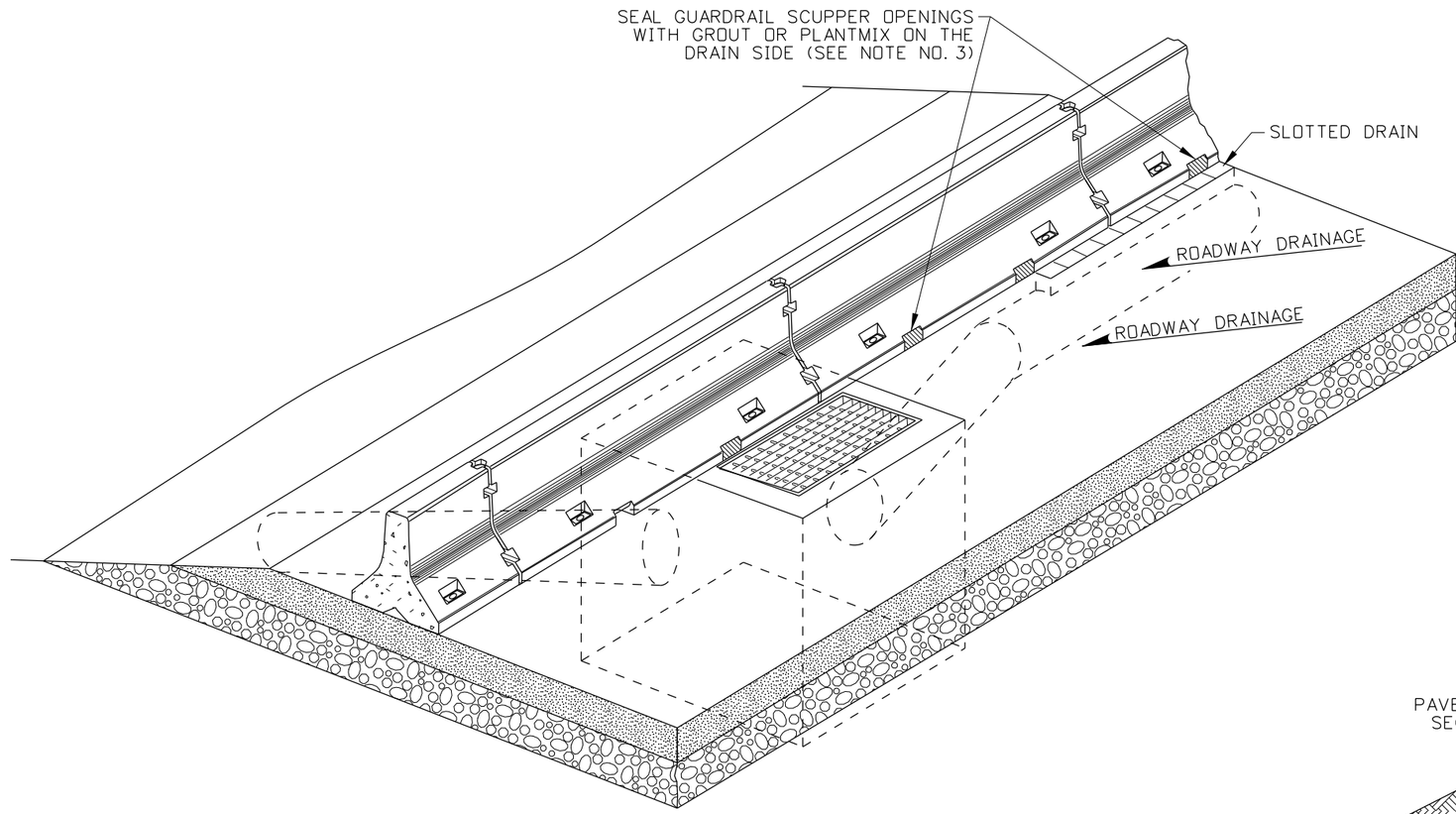

ISOMETRIC VIEW
(10' BARRIER SHOWN)

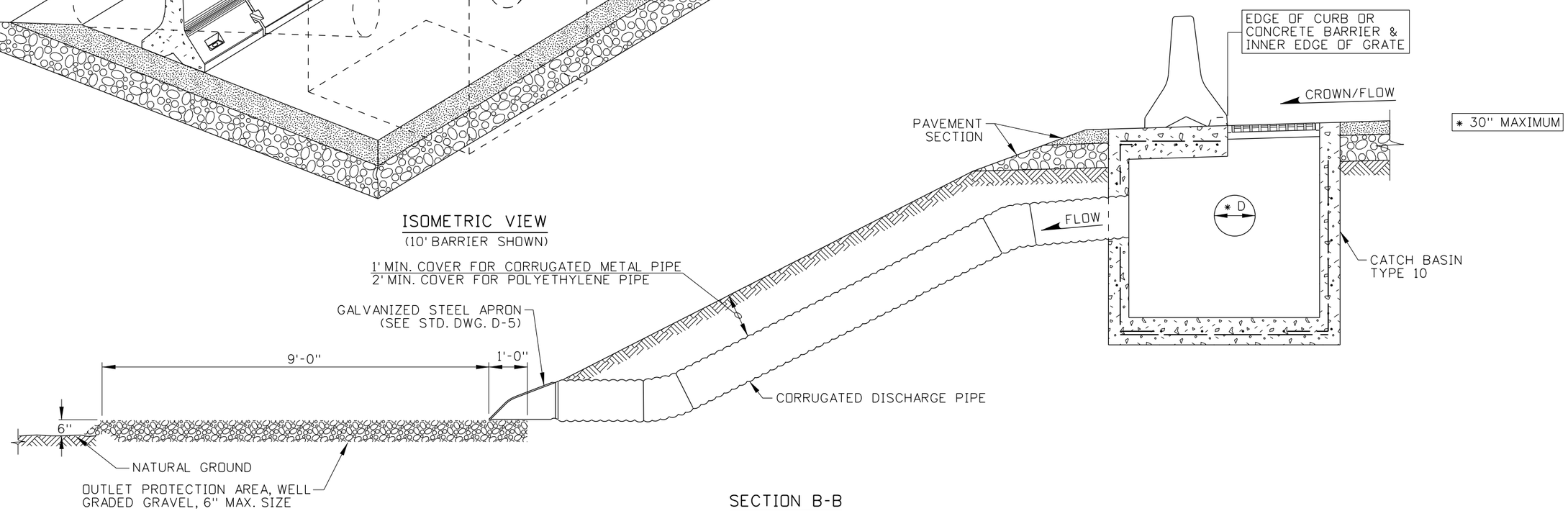

SECTION B-B

ORIGINAL STORED AT: ITD, Headquarters 3311 West State Boise, Idaho

ORIGINAL SIGNED BY: RYAN D. LANCASTER
DATE ORIGINAL SIGNED: JANUARY 31, 2013

REVISIONS								
NO.	DATE	BY	NO.	DATE	BY	NO.	DATE	BY
1	12-01	MSM						
2	7-02	MSM						
3	3-05	MSM						
4	9-10	PLR						
5	12-12	RDL						

SCALES SHOWN ARE FOR 11" X 17" PRINTS ONLY

CADD FILE NAME: d1b_0213.std

DRAWING DATE: DECEMBER, 1993

IDAHO TRANSPORTATION DEPARTMENT

BOISE IDAHO

ORIGINAL SIGNED BY: LOREN THOMAS
HIGHWAYS PROGRAM OVERSIGHT ENGINEER
ORIGINAL SIGNED BY: TOM COLE
CHIEF ENGINEER

STANDARD DRAWING

RUNOFF DRAIN OR EMBANKMENT PROTECTOR WITH SLOTTED DRAIN

REQUIRES SHEET 1 OF 2 & STD. DWGS. D-5 & E-6-H

English

STANDARD DRAWING NO.

D-1-B

SHEET 2 OF 2

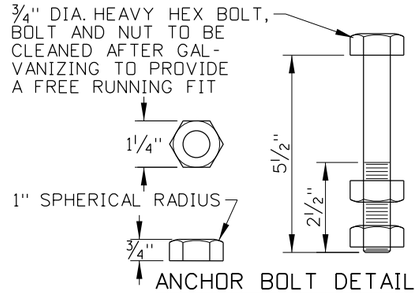

ANCHOR BOLT DETAIL

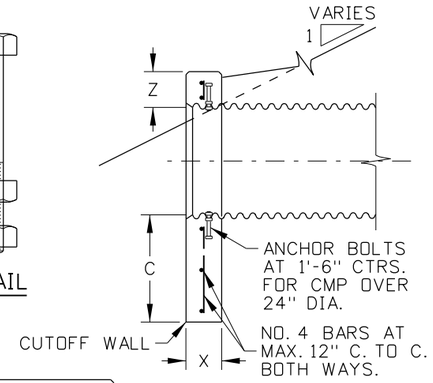

SECTION A-A

* a ADJUST WALL ENDS TO FILL SLOPE. WHEN CULVERT IS SKEWED TO EMBANKMENT, SLOPE THE ANGLE OF THE HEADWALL TO MEET THE FILL ON THE HIGH SIDE.

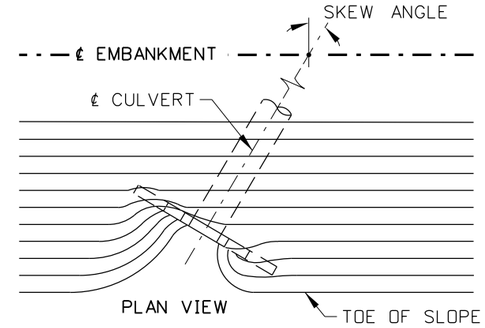

EMBANKMENT CONTOURS FOR SKEWED CULVERT

DIMENSION TABLE						
DIA. (INCHES)	C (INCHES)	V (INCHES)	W (INCHES)	X (INCHES)	Y (INCHES)	Z (INCHES)
18	24	36	4	8	5	8
24	24	48	5	9	6	9
30	24	60	6	9	8	9
36	24	54	11	10	9	10
42	24	63	13	10	11	10
48	24	72	14	10	12	10
54	24	81	15	11	14	11
60	24	90	16	11	15	11
72	36	108	19	11	18	11
84	36	126	21	11	21	11
96	36	144	24	12	24	12
108	36	162	27	14	27	14
120	36	180	30	15	30	15
144	36	216	36	18	36	18
180	36	270	45	23	45	23

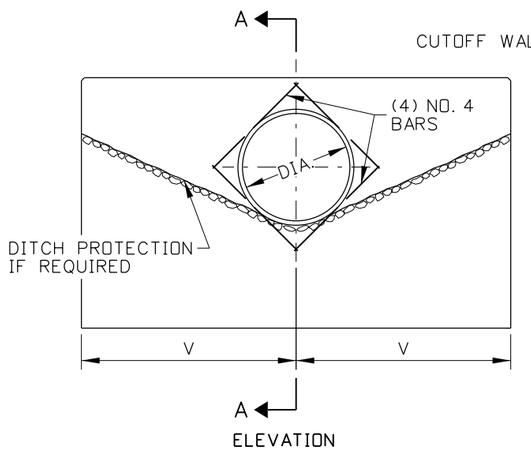

INLET STRUCTURE (CULVERT SIZES 18" TO LESS THAN 36" DIA.)

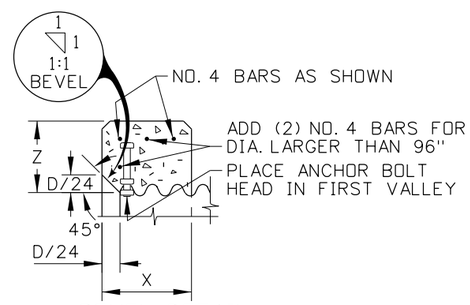

BEVEL DETAIL

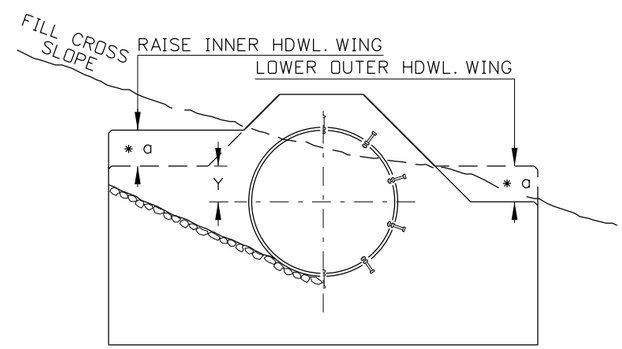

SLOPE ADJUSTMENT DETAIL

SUMMARY OF QUANTITIES					
DIA. (INCHES)	CONCRETE (CU. YD.)	METAL REINF. (LBS.)	DIA. (INCHES) CON'T.	CONCRETE (CU. YD.) CON'T.	METAL REINF. (LBS.) CON'T.
18	0.6	45			
24	0.9	65	72	4.1	435
30	1.2	85	84	5.6	535
36	1.2	75	96	6.9	640
42	1.4	90	108	9.8	795
48	1.7	105	120	12.5	955
54	2.3	125	144	20.3	1,255
60	2.6	145	180	37.6	1,820
NOTE: QUANTITIES SHOWN ARE FOR CORR. METAL PIPE (CMP)					

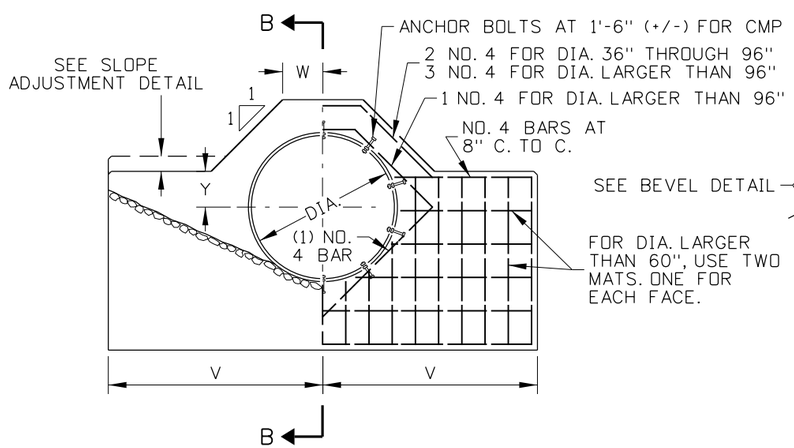

HALF ELEVATION

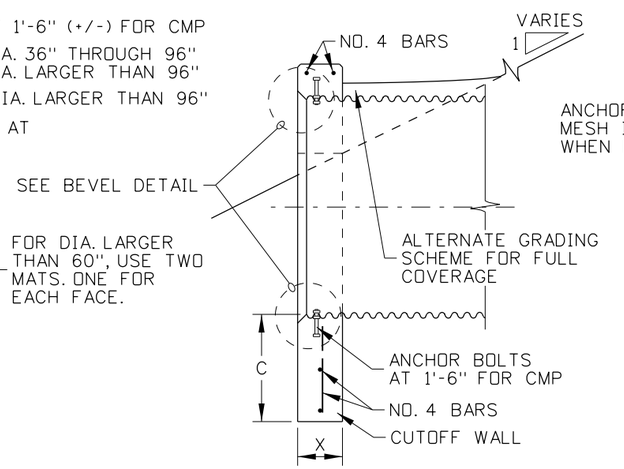

SECTION B-B (CORRUGATED METAL PIPE)

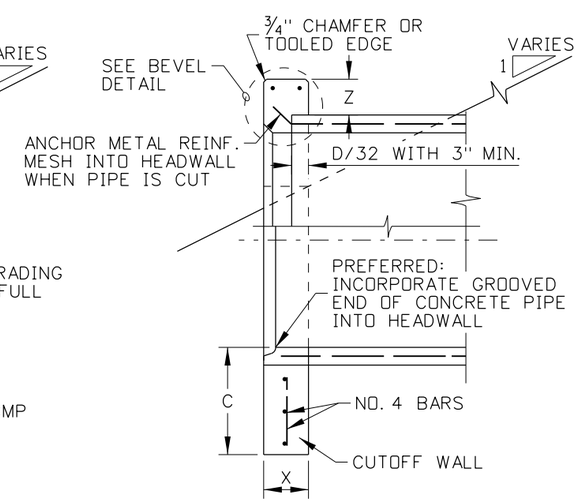

SECTION B-B (CONCRETE PIPE)

INLET STRUCTURE (CULVERT SIZES 36" TO 180" DIA.)

NOTES

1. ENSURE THAT ANCHOR BOLT AND NUT MATERIAL CONFORMS TO ASTM A307. GALVANIZE BOLTS AND NUTS AFTER FABRICATION IN ACCORDANCE WITH AASHTO M 232. ANCHOR BOLTS ARE NOT REQUIRED FOR CONCRETE PIPE.
2. THE DEPTH OF THE CUTOFF WALL SHOWN MAY BE REDUCED IF ROCK IS ENCOUNTERED AT A HIGHER ELEVATION.
3. TO PERMIT THE PLACEMENT AND TAMPING OF BACKFILL MATERIAL BETWEEN MULTIPLES PIPES, PROVIDE A CLEAR SPACE OF ONE-HALF THE DIAMETER OF THE LARGER PIPE. ENSURE THAT THE CLEAR SPACE DOES NOT EXCEED 3 FEET.
4. WHEN USING PERVIOUS BEDDING AND BACKFILL MATERIAL, PREVENT SEEPAGE AND PIPING BY PLACING IMPERVIOUS MATERIAL AT THE INLET. CUTOFF COLLARS MAY BE USED INSTEAD OF IMPERVIOUS MATERIAL.
5. USE ENTRANCE LOSS COEFFICIENT K_e=0.2 FOR BEVELED ENTRANCE.
6. WHEN CULVERT IS SKEWED TO EMBANKMENT, THE EMBANKMENT MAY BE CONTOURED AS SHOWN.
7. COVER REINFORCING STEEL WITH A MINIMUM CONCRETE DEPTH OF 2".
8. ALL EDGES TO HAVE 3/4" CHAMFER OR TOOLED EDGES.
9. THIS INLET IS TO BE USED ONLY OUTSIDE OF THE CLEAR ZONE, OR BEHIND GUARDRAIL.
10. NOT TO SCALE.

ORIGINAL STORED AT: ITD, Headquarters 3311 West State Boise, Idaho

ORIGINAL SIGNED BY: RYAN D. LANCASTER DATE ORIGINAL SIGNED: DECEMBER 17, 2012

REVISIONS								
NO.	DATE	BY	NO.	DATE	BY	NO.	DATE	BY
1	1-97	MSM						
2	11-00	MSM						
3	7-02	MSM						
4	3-05	MSM						
5	12-12	RDL						

SCALES SHOWN ARE FOR 11" X 17" PRINTS ONLY

CADD FILE NAME: d2a_1212.std

DRAWING DATE: JANUARY, 1989

IDAHO TRANSPORTATION DEPARTMENT

BOISE IDAHO

ORIGINAL SIGNED BY: LOREN THOMAS
HIGHWAYS PROGRAM OVERSIGHT ENGINEER
ORIGINAL SIGNED BY: TOM COLE
CHIEF ENGINEER

STANDARD DRAWING

CULVERT INLET HEADWALL

English

STANDARD DRAWING NO.

D-2-A

SHEET 1 OF 1

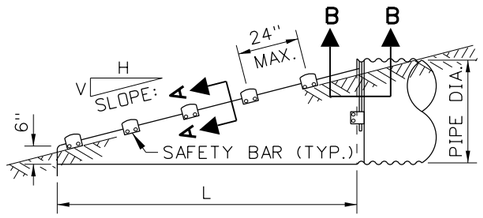

SIDE VIEW - PARALLEL DRAINAGE APRON

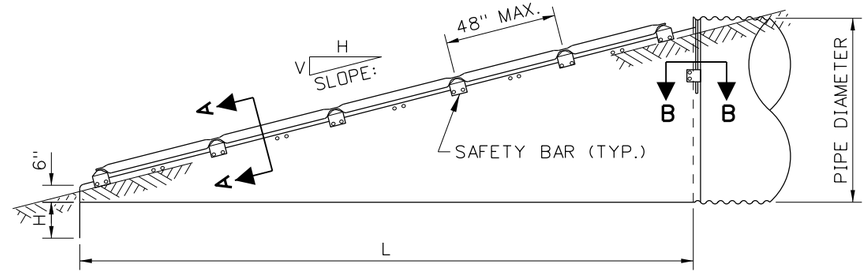

SIDE VIEW OF CROSS DRAINAGE APRON

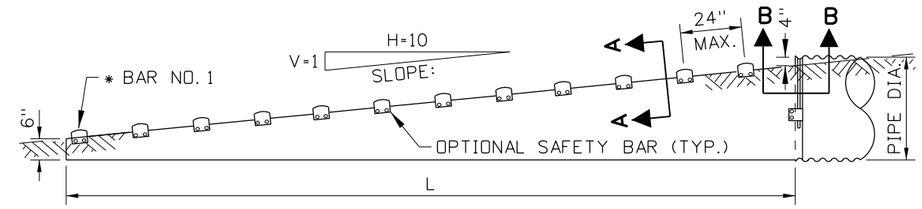

* THE NUMBER OF BARS REQUIRED WILL VARY DEPENDING ON THE APRON LENGTH (L)

SIDE VIEW - PARALLEL DRAINAGE APRON

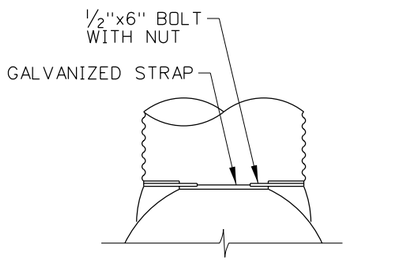

CIRCULAR PIPES 15" THROUGH 24"

TYPE 1

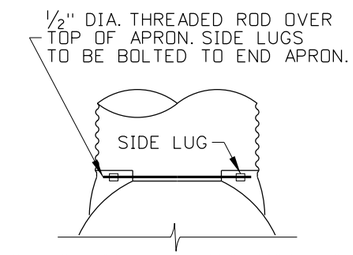

FOR 30" DIA. & LARGER CIRCULAR PIPES, & ALL ARCHED PIPES

TYPE 2

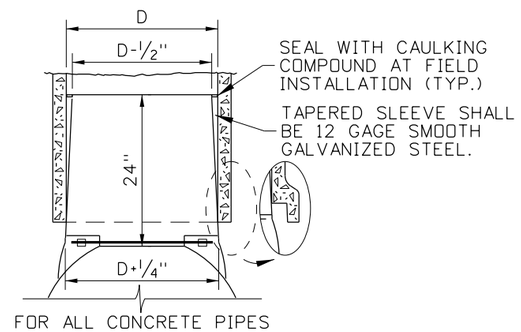

FOR ALL CONCRETE PIPES

TYPE 3

CONNECTIONS

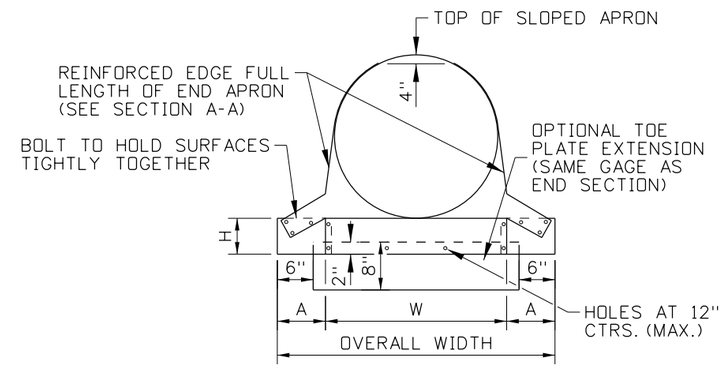

FRONT VIEW - ROUND PIPE

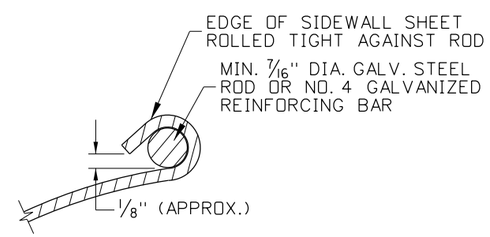

SECTION A-A

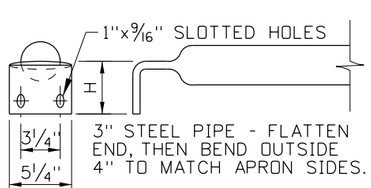

SAFETY BAR DETAIL

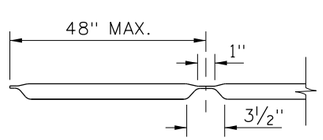

LONGITUDINAL BAR DETAIL

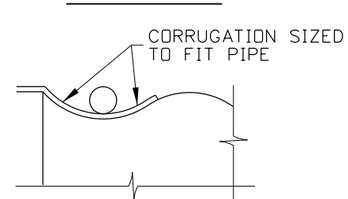

SECTION B-B

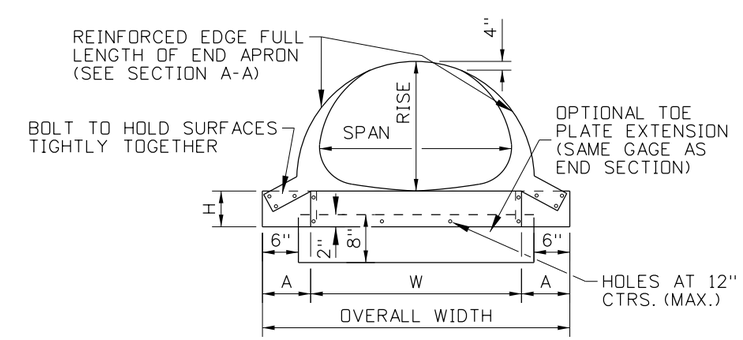

FRONT VIEW - ARCHED PIPE

ORIGINAL STORED AT: ITD, Headquarters 3311 West State Boise, Idaho

ORIGINAL SIGNED BY: RYAN D. LANCASTER
DATE ORIGINAL SIGNED: DECEMBER 17, 2012

REVISIONS								
NO.	DATE	BY	NO.	DATE	BY	NO.	DATE	BY
1	7-92	MSM						
2	6-97	MSM						
3	11-00	MSM						
4	3-05	MSM						
5	12-12	RDL						

SCALES SHOWN ARE FOR 11" X 17" PRINTS ONLY

CADD FILE NAME: d3c_1212.std

DRAWING DATE: NOVEMBER, 1990

IDAHO TRANSPORTATION DEPARTMENT

BOISE IDAHO

ORIGINAL SIGNED BY: LOREN THOMAS
HIGHWAYS PROGRAM OVERSIGHT ENGINEER
ORIGINAL SIGNED BY: TOM COLE
CHIEF ENGINEER

STANDARD DRAWING

METAL SAFETY SLOPE APRONS

REQUIRES SHEET 2 OF 2

English

STANDARD DRAWING NO.

D-3-C

SHEET 1 OF 2

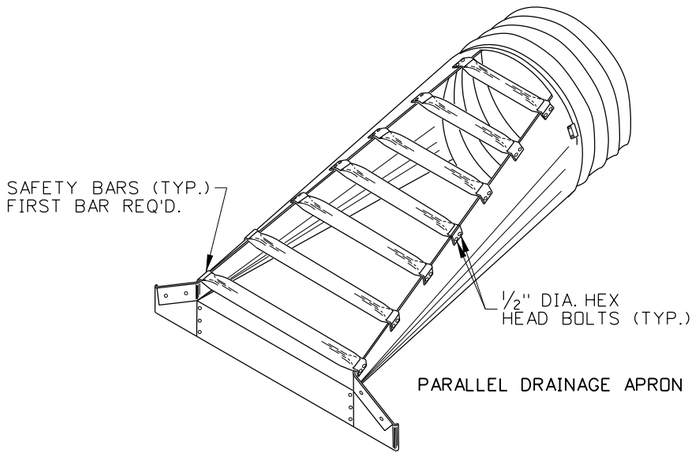

PARALLEL DRAINAGE APRON

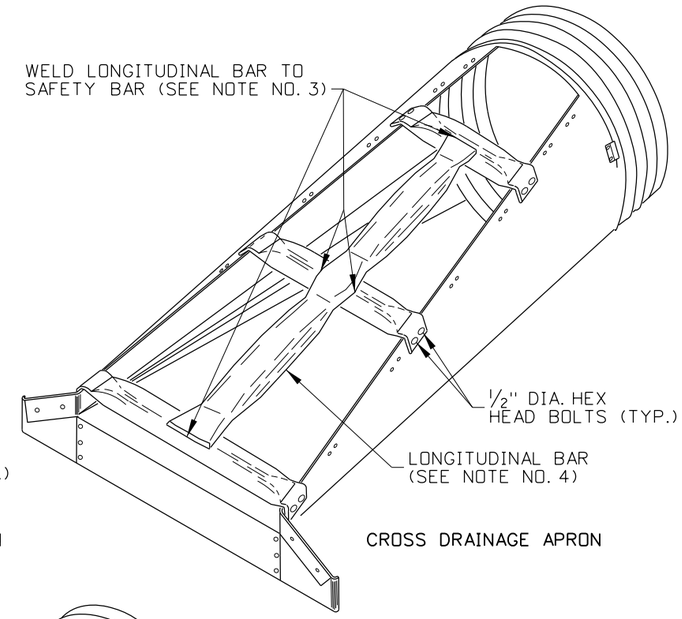

CROSS DRAINAGE APRON

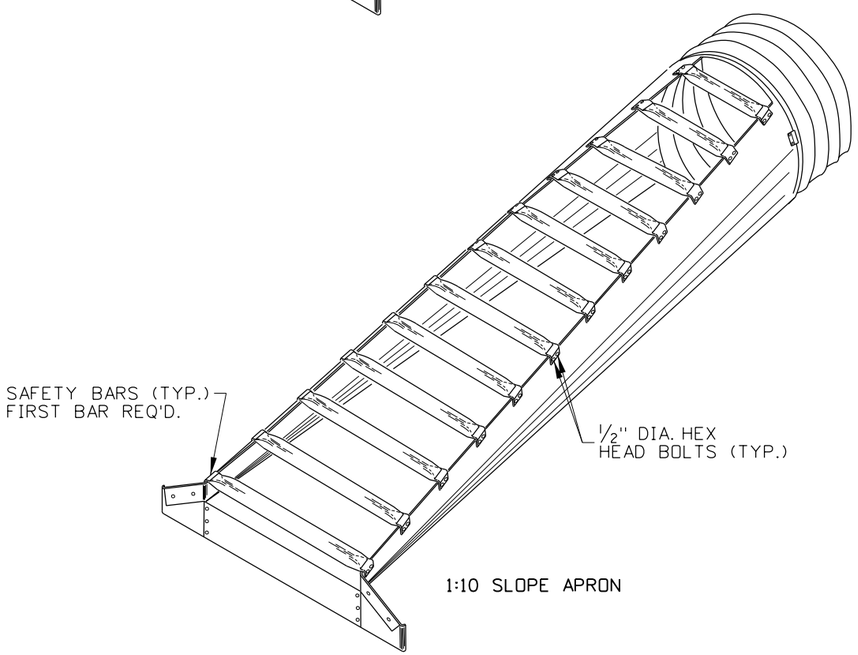

1:10 SLOPE APRON

PERSPECTIVE VIEWS - APRONS

APRONS FOR CIRCULAR PIPES												
PIPE DIA. (IN.)	MIN. THICK.		DIMENSIONS (IN.)				L DIMENSIONS					
	IN.	GAGE	A	H	W	OVERALL WIDTH	SLOPE H:V	LENGTH (IN.)	SLOPE H:V	LENGTH (IN.)	SLOPE H:V	LENGTH (IN.)
15	.064	16	8	6	21	37	4:1	20	6:1	30	10:1	70
18	.064	16	8	6	24	40	4:1	32	6:1	48	10:1	100
21	.064	16	8	6	27	43	4:1	44	6:1	60	10:1	120
24	.064	16	8	6	30	46	4:1	56	6:1	84	N/A	
30	.109	12	12	9	36	60	4:1	80	6:1	114	N/A	
36	.109	12	12	9	42	66	4:1	104	6:1	138	N/A	
42	.109	12	16	12	48	80	4:1	128	6:1	168	N/A	
48	.109	12	16	12	54	86	4:1	152	6:1	198	N/A	
54	.109	12	16	12	60	92	4:1	176	6:1	222	N/A	
60	.109	12	16	12	66	98	4:1	200	6:1	282	N/A	

APRONS FOR ARCHED PIPES														
EQUIV. DIA. (IN.)	(INCHES)		MIN. THICK.		DIMENSIONS (IN.)				L DIMENSIONS					
	SPAN	RISE	IN.	GAGE	A	H	W	OVERALL WIDTH	SLOPE H:V	LENGTH (IN.)	SLOPE H:V	LENGTH (IN.)	SLOPE H:V	LENGTH (IN.)
18	21	15	.064	16	8	6	27	43	4:1	20	6:1	30	10:1	70
21	24	18	.064	16	8	6	30	46	4:1	32	6:1	48	10:1	100
24	28	20	.064	16	8	6	34	50	4:1	40	6:1	60	10:1	120
30	35	24	.079	14	12	9	41	65	4:1	56	6:1	84	N/A	
36	42	29	.109	12	12	9	48	72	4:1	76	6:1	114	N/A	
42	49	33	.109	12	16	12	55	87	4:1	92	6:1	138	N/A	
48	57	38	.109	12	16	12	63	95	4:1	112	6:1	168	N/A	
54	64	43	.109	12	16	12	70	102	4:1	132	6:1	198	N/A	
60	71	47	.109	12	16	12	77	109	4:1	148	6:1	222	N/A	
72	83	57	.109	12	16	12	89	121	4:1	188	6:1	282	N/A	

NOTES

1. USE APRONS SHOWN FOR 4:1 TO 10:1 SLOPES ONLY.
2. A LONGITUDINAL BAR IS REQUIRED FOR CROSS DRAINAGE APRONS WHEN THE SPAN OR DIAMETER IS GREATER THAN 30". ADD LONGITUDINAL BARS IF SPACING EXCEEDS 30" ON LARGER APRONS.
3. SAFETY AND LONGITUDINAL BARS ARE NOT REQUIRED ON 30" AND SMALLER CROSS DRAINAGE APRONS.
4. SAFETY BARS ARE NOT REQUIRED ON 18" AND SMALLER PARALLEL DRAINAGE APRONS EXCEPT FOR THE FIRST BAR AT THE APRON OPENING.
5. PROVIDE SLOTTED HOLES FOR SAFETY BAR ATTAINMENT.
6. NOT TO SCALE.

ORIGINAL STORED AT: ITD, Headquarters 3311 West State Boise, Idaho

ORIGINAL SIGNED BY: RYAN D. LANCASTER DATE ORIGINAL SIGNED: DECEMBER 17, 2012

REVISIONS								
NO.	DATE	BY	NO.	DATE	BY	NO.	DATE	BY
1	7-92	MSM						
2	6-97	MSM						
3	11-00	MSM						
4	3-05	MSM						
5	12-12	RDL						

SCALES SHOWN ARE FOR 11" X 17" PRINTS ONLY

CADD FILE NAME: d3c_1212.std

DRAWING DATE: NOVEMBER, 1990

IDAHO TRANSPORTATION DEPARTMENT

BOISE IDAHO

ORIGINAL SIGNED BY: LOREN THOMAS
HIGHWAYS PROGRAM OVERSIGHT ENGINEER
ORIGINAL SIGNED BY: TOM COLE
CHIEF ENGINEER

STANDARD DRAWING

METAL SAFETY SLOPE APRONS

REQUIRES SHEET 1 OF 2

English

STANDARD DRAWING NO.

D-3-C

SHEET 2 OF 2

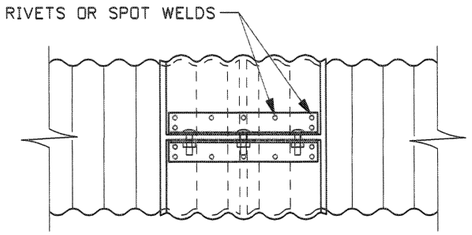

TYPES 1-A & 2-A
ANNULAR COUPLING BAND

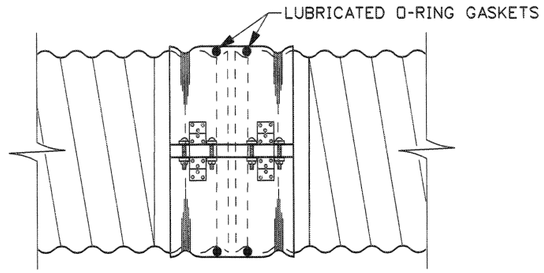

DOUBLE BAR AND STRAP-TYPE 3
HUGGER COUPLING BAND

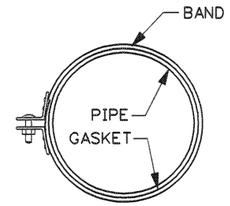

TYPE 1
SINGLE PIECE BAND

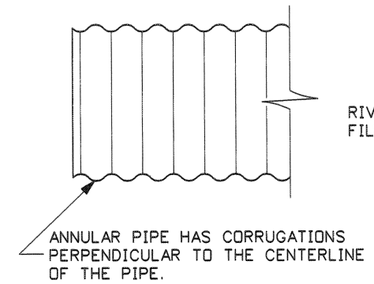

ANNULAR CMP

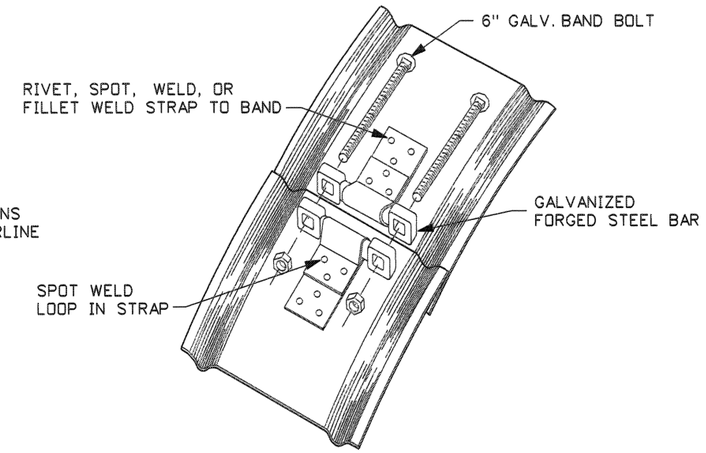

BAND TYPE 3
BAR & STRAP COUPLING
(SINGLE STRAP)

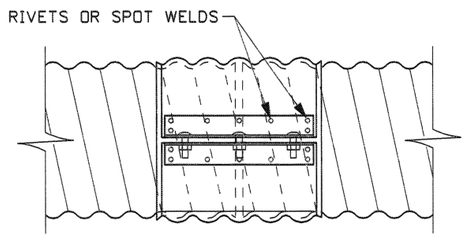

TYPE 1-B & 2-B
HELICAL COUPLING BAND

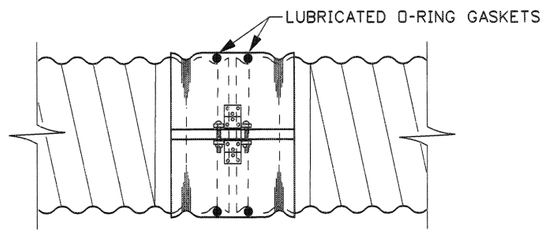

SINGLE BAR AND STRAP-TYPE 3
HUGGER COUPLING BAND

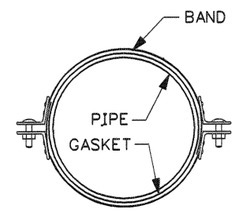

TYPE 2
TWO PIECE BAND

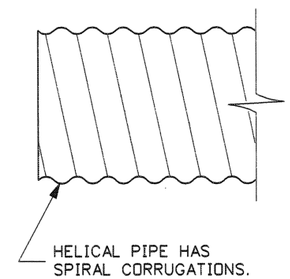

HELICAL CMP

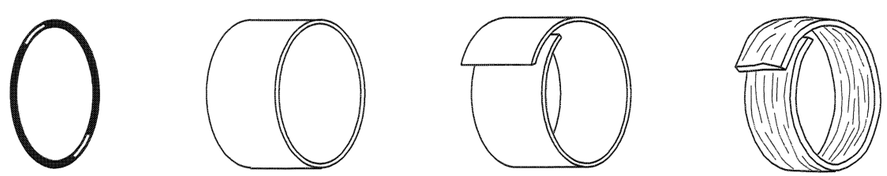

STANDARD CORRUGATED STEEL PIPE GASKET TYPES

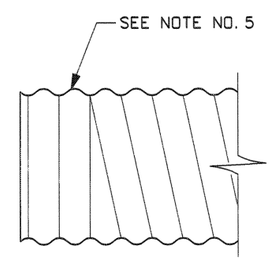

REFORMED HELICAL CMP

NOTES

1. THE REFORMED ENDS OF HELICAL CORRUGATED METAL PIPE MADE TO ACCEPT ANNULAR COUPLING BANDS SHALL BE UNIFORM AND SMOOTH IN APPEARANCE. PIPE WITH IRREGULAR REFORMED ENDS ARE NOT ACCEPTABLE.
2. SLEEVE AND STRIP GASKETS FOR COUPLING BANDS TYPE 1-A AND 1-B SHALL EXCEED THE WIDTH OF THE BAND BY A MINIMUM OF 1/4" ON BOTH EDGES. THE GASKETS SHALL FIT SNUGGLY AROUND THE PIPES PRIOR TO INSTALLATION OF THE BAND.
3. ALL WELDS AND/OR EXPOSED FERROUS METAL ON COUPLING BANDS AND BAND CONNECTING HARDWARE SHALL BE REPAIRED IN ACCORDANCE WITH AASHTO M 36.
4. STEEL BAND THICKNESS SHALL BE AT LEAST 1/2 THE THICKNESS OR GAUGE OF THE PIPE. ALUMINUM BANDS SHALL BE THE SAME THICKNESS AS THE PIPE.
5. THE JOINTS FOR SIPHONS AND SEWERS SHALL BE WATERTIGHT AND PRESSURE TESTED PRIOR TO ACCEPTANCE, AS REQUIRED IN THE STANDARD SPECIFICATIONS.
6. TO PREVENT GALVANIC ACTION WHEN BANDS AND PIPES ARE OF AN UNLIKE METAL, THE BANDS SHALL BE ASPHALT COATED.
7. GASKET MATERIALS ARE NOT TO BE ALTERED, SEWN, OR PATCHED. THE USE OF SEALANTS AND/OR LUBRICANTS WITH BAND GASKETS MUST BE AS THE MANUFACTURER SPECIFIES. THE QUALITY AND CHEMICAL COMPOSITION OF SEAL ANTS AND LUBRICANTS WILL BE AS THE MANUFACTURER REQUIRES. CONTACT THE MANUFACTURER FOR DETAILS.
9. SPOT WELDED OR FILLET WELDED STRAPS ON BANDS SHALL BE OF EQUAL STRENGTH TO RIVETED STRAPS.
10. ALL RECOMMENDATIONS IN THE PIPE COUPLING BAND TABLE ARE TO BE CONSIDERED MINIMAL.
11. NOT TO SCALE.

REVISIONS

NO.	DATE	BY	NO.	DATE	BY	NO.	DATE	BY
1	2-76		6	3-05	MSM			
2	2-77							
3	9-93	MSM						
4	12-95	MSM						
5	6-02	MSM						

SCALES SHOWN ARE FOR 11" X 17" PRINTS ONLY

CADD FILE NAME d4a_0305.std

DRWG. ORIG. DATE: APRIL, 1961

IDAHO TRANSPORTATION DEPARTMENT

BOISE IDAHO

ASSISTANT CHIEF ENGINEER (DEVELOPMENT)

CHIEF ENGINEER

STANDARD DRAWING

WATERTIGHT COUPLING BANDS FOR CORRUGATED METAL PIPES

REQUIRES SHEET 2 OF 2

English

STANDARD DRWG. NO.

D-4-A

SHEET 1 OF 2

PROFESSIONAL ENGINEER * LAND SURVEYOR REGISTERED 2240 3/4/05 STATE OF IDAHO MILFORD MILLER

PIPE COUPLING BAND TABLE						PIPE CORRUGATION STYLE			SIPHON	* CULVERT	IRRIGATION	SEWER	UNDERDRAIN
COUPLING TYPE	CORRUGATIONS	PIPE SIZE	COUPLING WIDTH	COUPLING BOLTS (NO.) DIA.	GASKET TYPE	ANNULAR PIPE	REFORMED HELICAL	HELICAL PIPE					
TYPE 1-A ANNULAR COUPLING BAND	1½" x ¼" & 2⅜" x ½"	6"-10"	7" (1 PIECE)	(3) ⅜"	SLEEVE	X	X		X	X	X	X	X
	2⅜" x ½" & 3" x 1"	12"-15"	7" (1 PIECE)	(3) ½"	SLEEVE	X	X		X	X	X	X	X
	2⅜" x ½" & 3" x 1"	18"-24"	12" (1 PIECE)	(3) ½"	SLEEVE	X	X		X	X	X	X	X
	2⅜" x ½" & 3" x 1"	30"-42"	24" (1 PIECE)	(5) ⅝"	SLEEVE	X	X			X	X		X
TYPE 1-B HELICAL COUPLING BAND	1½" x ¼" & 2⅜" x ½"	6"-10"	7" (1 PIECE)	(3) ⅜"	SLEEVE OR STRIP			X		X	X		X
	2⅜" x ½" & 3" x 1"	12"-15"	7" (1 PIECE)	(3) ½"	SLEEVE OR STRIP			X		X	X		X
	2⅜" x ½" & 3" x 1"	18"-24"	12" (1 PIECE)	(3) ½"	SLEEVE OR STRIP			X		X	X		X
	2⅜" x ½" & 3" x 1"	30"-42"	24" (1 PIECE)	(5) ⅝"	SLEEVE OR STRIP			X		X	X		X
TYPE 2-A ANNULAR COUPLING BAND	1½" x ¼" & 2⅜" x ½"	6"-10"	7" (2 PIECE)	(4) ⅜"	SLEEVE, STRIP OR MASTIC	X	X		X	X	X	X	X
	2⅜" x ½" & 3" x 1"	12"-15"	7" (2 PIECE)	(4) ⅜"	SLEEVE, STRIP OR MASTIC	X	X		X	X	X	X	X
	2⅜" x ½" & 3" x 1"	18"-24"	12" (2 PIECE)	(6) ½"	SLEEVE, STRIP OR MASTIC	X	X		X	X	X	X	X
	2⅜" x ½" & 3" x 1"	30"-84"	24" (2 PIECE)	(8) ½"	SLEEVE, STRIP OR MASTIC	X	X		X	X	X	X	X
TYPE 2-B HELICAL COUPLING BAND	1½" x ¼" & 2⅜" x ½"	6"-10"	7" (2 PIECE)	(4) ⅜"	SLEEVE, STRIP OR MASTIC			X		X	X		X
	2⅜" x ½" & 3" x 1"	12"-15"	7" (2 PIECE)	(4) ⅜"	SLEEVE, STRIP OR MASTIC			X		X	X		X
	2⅜" x ½" & 3" x 1"	18"-24"	12" (2 PIECE)	(6) ½"	SLEEVE, STRIP OR MASTIC			X		X	X		X
	2⅜" x ½" & 3" x 1"	30"-84"	24" (2 PIECE)	(8) ½"	SLEEVE, STRIP OR MASTIC			X		X	X		X
TYPE 3 HUGGER CONNECTING BAND	2⅜" x ½" & 3" x 1"	12"-48" (GALV.)	7½" (STRAP)	(2) 6" x ½"	O-RING	X	X			X	X	X	X
	2⅜" x ½" & 3" x 1"	54"-96" (GALV.)	10½" (2 STRAP)	(4) 6" x ⅝"	O-RING	X	X			X	X	X	X
	2⅜" x ½" & 3" x 1"	102"-144" (GALV.)	12" (3 STRAP)	(6) 6" x ⅞"	O-RING	X	X			X	X	X	X

* WATERTIGHT BANDS ARE NOT REQUIRED ON CULVERT INSTALLATIONS UNLESS SPECIFIED BY THE PLANS OR SPECIAL PROVISIONS

REVISIONS

NO.	DATE	BY	NO.	DATE	BY	NO.	DATE	BY
1	2-76		6	3-05	MSM			
2	2-77							
3	9-93	MSM						
4	12-95	MSM						
5	6-02	MSM						

SCALES SHOWN ARE FOR 11" X 17" PRINTS ONLY

CADD FILE NAME d4a_0305.std

DRWG. ORIG. DATE: APRIL, 1961

IDAHO TRANSPORTATION DEPARTMENT

BOISE IDAHO

ASSISTANT CHIEF ENGINEER (DEVELOPMENT)

CHIEF ENGINEER

STANDARD DRAWING

WATERTIGHT COUPLING BANDS FOR CORRUGATED METAL PIPES

REQUIRES SHEET 1 OF 2

English

STANDARD DRWG. NO.

D-4-A

SHEET 2 OF 2

PROFESSIONAL ENGINEER * LAND SURVEYOR REGISTERED 2240 3/4/05 STATE OF IDAHO MILFORD MILLER

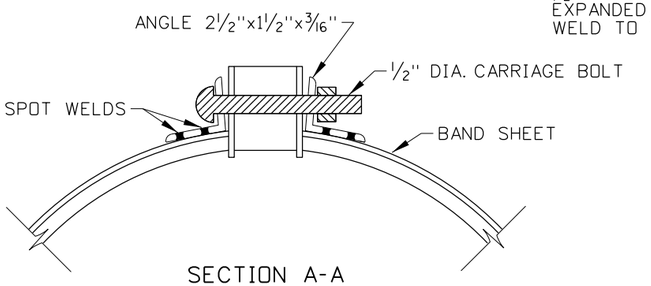

SECTION A-A

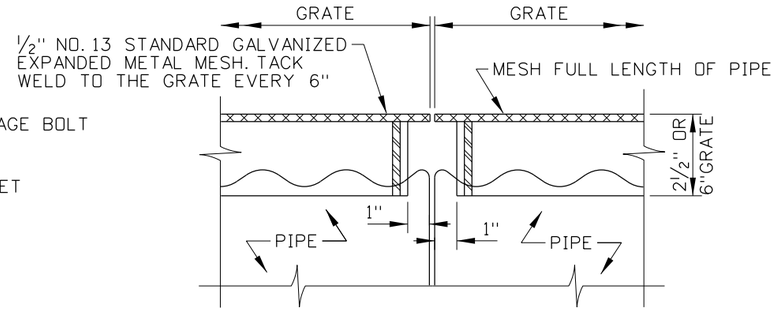

SECTION B-B

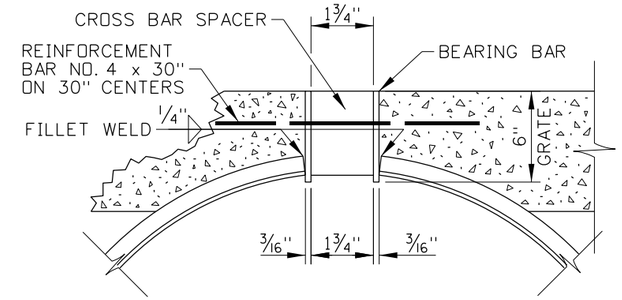

WHEN CONCRETE PAVEMENT IS USED

STANDARD GRATE SLOT DETAIL

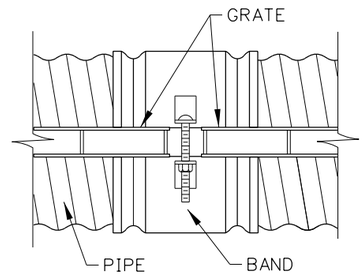

TOP VIEW

TYPICAL COUPLING BAND

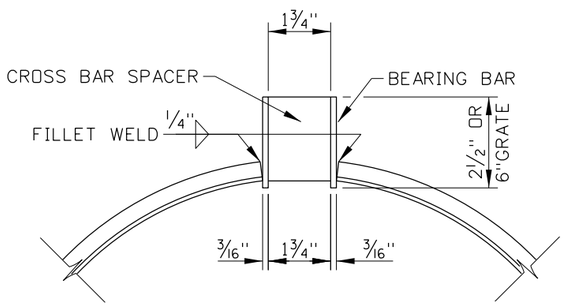

TYPE 1 - STANDARD GRATE SLOT DETAIL

SECTION C-C

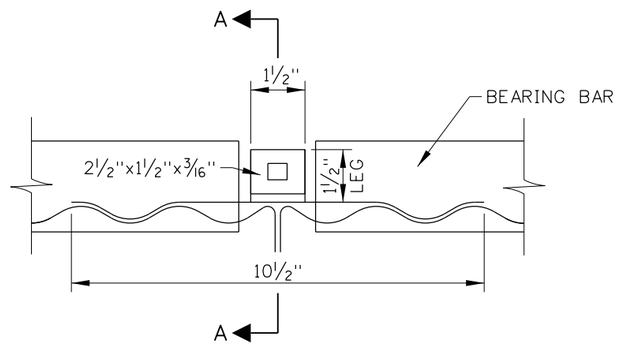

ELEVATION

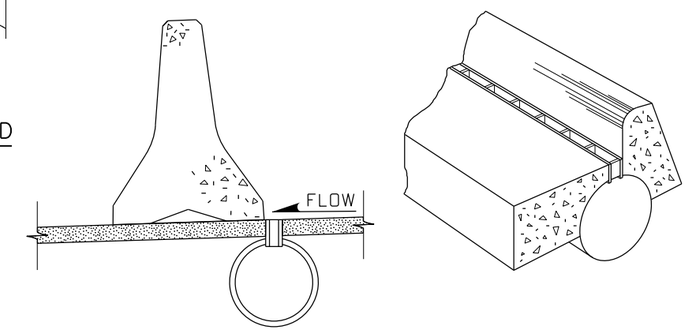

TYPICAL INSTALLATIONS

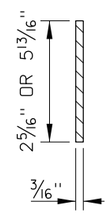

CROSS BAR SPACER

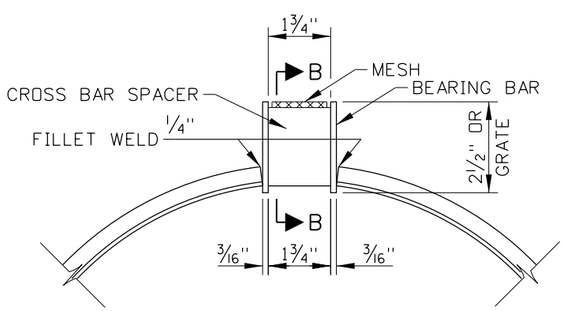

TYPE 2 - ALTERNATE GRADE SLOT DETAIL FOR INCLUSION OF MESH

SECTION C'-C'

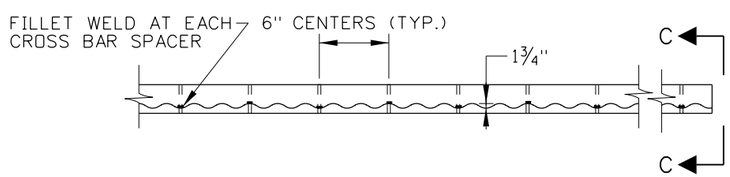

GRATE SLOT WELDING DETAIL

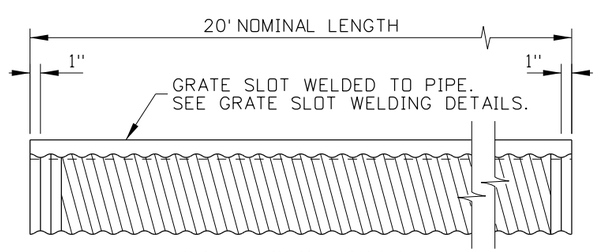

GRATE SLOT DRAIN

NOTES

1. USE MINIMUM PIPE THICKNESS OF 0.079 INCHES FOR SLOTTED DRAINS.
2. THE DEPTH OF GRATES ON SLOTTED DRAINS WILL BE AS SHOWN ON THE PLANS.
3. SLOTTED DRAIN GRATES DO NOT NEED TO BE PAINTED OR GALVANIZED.
4. ENSURE THAT GASKETS, GASKET MATERIALS, O-RINGS, AND COUPLING BANDS MEET THE REQUIREMENTS OF STANDARD DRAWING D-4-A.
5. THE FINISHED TOP OF PAVEMENT SHALL BE FLUSH WITH THE GRATE SURFACE.
6. WELD THE METAL GRATE IN ACCORDANCE WITH THE REQUIREMENTS OF THE AMERICAN WELDING SOCIETY D1.1.
7. NOT TO BE USED IN TEMPORARY OR PERMANENT TRAFFIC LANES. USE ONLY WHERE TRAFFIC IS OCCASIONAL, SUCH AS ON HIGHWAY SHOULDERS.
8. NOT TO SCALE.

ORIGINAL STORED AT: ITD, Headquarters 3311 West State Boise, Idaho

ORIGINAL SIGNED BY: RYAN D. LANCASTER DATE ORIGINAL SIGNED: DECEMBER 17, 2012

REVISIONS

NO.	DATE	BY	NO.	DATE	BY	NO.	DATE	BY
1	1-79							
2	2-96	IJR						
3	6-02	MSM						
4	10-05	MSM						
5	12-12	RDL						

SCALES SHOWN ARE FOR 11" X 17" PRINTS ONLY

CADD FILE NAME: d4b_1212.std

DRAWING DATE: MAY, 1977

IDAHO TRANSPORTATION DEPARTMENT

BOISE IDAHO

ORIGINAL SIGNED BY: LOREN THOMAS
HIGHWAYS PROGRAM OVERSIGHT ENGINEER
ORIGINAL SIGNED BY: TOM COLE
CHIEF ENGINEER

STANDARD DRAWING

12" THRU 30" SLOTTED DRAIN

REQUIRES STD. DWG. D-4-A

English

STANDARD DRAWING NO.

D-4-B

SHEET 1 OF 1

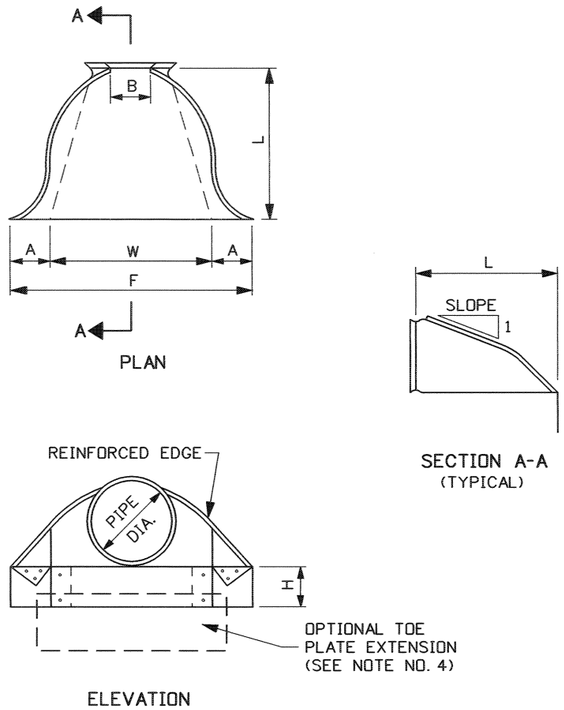

APRON FOR ROUND METAL PIPE

(GALVANIZED STEEL)

DIMENSIONS TABLE									
PIPE DIA.	THICK-NESS (1000'S)	ALL DIMENSIONS ARE IN INCHES						APPROX. SLOPE	BODY
		A (MIN.)	B	H (MIN.)	F (MIN.)	L (+/-) 2"	W (MAX.)		
12	0.064	5	7	6	22	21	24	2½:1	1 PC.
15	0.064	7	8	6	28	26	30	2½:1	1 PC.
18	0.064	7	10	6	34	31	36	2½:1	1 PC.
21	0.064	8	12	6	40	36	42	2½:1	1 PC.
24	0.064	9	13	6	46	41	48	2½:1	1 PC.
30	0.079	13	16	8	55	51	60	2½:1	1 PC.
36	0.079	11	19	9	70	60	72	2½:1	2 PC.
42	0.109	15	25	10	82	69	84	2½:1	2 PC.
48	0.109	17	29	12	88	78	90	2¼:1	2 PC.
54	0.109	17	33	12	100	84	102	2:1	2 PC.
60	0.109	17	36	12	112	87	114	1¾:1	3 PC.
66	0.109	17	39	12	118	87	120	1½:1	3 PC.
72	0.109	17	44	12	120	87	126	1⅓:1	3 PC.
78	0.109	17	48	12	130	87	132	1¼:1	3 PC.
84	0.109	17	52	12	136	87	138	1⅙:1	3 PC.

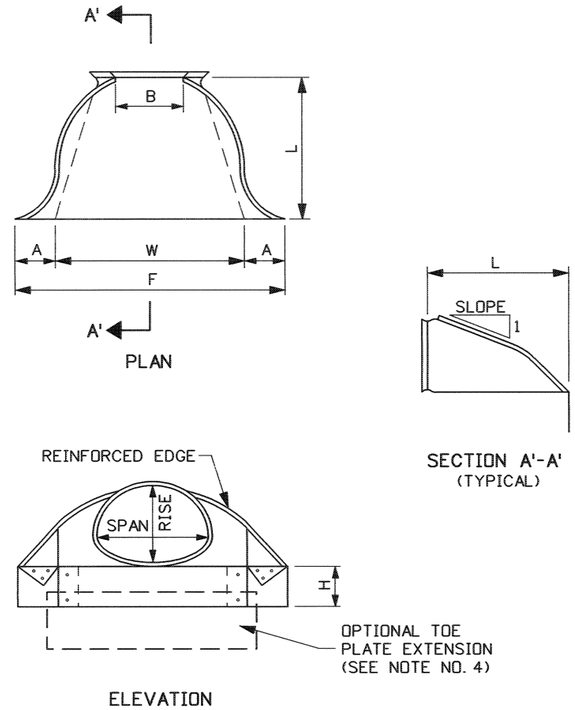

APRON FOR METAL ARCH PIPE

(GALVANIZED STEEL)

DIMENSIONS TABLE									
PIPE-ARCH		THICK-NESS (1000'S)	ALL DIMENSIONS ARE IN INCHES						APPROX. SLOPE	BODY
SPAN IN.	RISE IN.		A (MIN.)	B (MAX.)	H (MIN.)	F (MIN.)	L (+/-) 2"	W (MAX.)		
17	13	0.064	5	9	6	28	20	50	2½:1	1 PC.
21	15	0.064	6	11	6	34	24	58	2½:1	1 PC.
24	18	0.064	7	12	6	40	28	63	2½:1	1 PC.
28	20	0.064	7	16	6	46	32	70	2½:1	1 PC.
35	24	0.079	9	16	6	58	39	85	2½:1	1 PC.
42	29	0.079	11	18	7	73	46	104	2½:1	1 PC.
49	33	0.109	12	21	9	82	53	117	2½:1	2 PC.
57	38	0.109	16	26	12	88	62	130	2½:1	2 PC.
64	43	0.109	17	30	12	100	79	142	2¼:1	2 PC.
71	47	0.109	17	36	12	112	77	156	2¼:1	3 PC.
77	52	0.109	17	36	12	124	77	167	2:1	3 PC.
83	57	0.109	17	44	12	130	77	179	2:1	3 PC.

NOTES

1. ALL 3-PIECE BODIES (APRONS WITH PIPE DIA. 60 IN. & LARGER) TO HAVE 0.109 IN. SIDES AND 0.138 IN. CENTER PANELS. MULTIPLE PANEL BODIES TO HAVE LAP SEAMS WHICH ARE TO BE TIGHTLY JOINED BY GALVANIZED RIVETS OR BOLTS.
2. THE REINFORCED EDGES OF GALVANIZED STEEL APRONS, FOR ROUND METAL PIPE SIZES 60 IN. THROUGH 84 IN. AND FOR ARCH METAL PIPE SIZES 77x62 IN. THROUGH 83x57 IN., ARE TO BE SUPPLEMENTED BY GALVANIZED STIFFENER ANGLES. THE ANGLES ARE TO BE ATTACHED BY GALVANIZED BOLTS AND NUTS.
3. ANGLE REINFORCEMENT WILL BE PLACED UNDER THE CENTER PANEL SEAMS ON ARCH PIPE SIZES 77x52 IN. THROUGH 83x57 IN.
4. A GALVANIZED TOE PLATE IS AVAILABLE AS AN ACCESSORY. WHEN SPECIFIED IT SHALL BE THE SAME GAGE AS THE APRON.
5. THE APRON SHALL BE CONNECTED TO PIPE BY USING EITHER CONNECTING BANDS, RODS, OR STRAPS.
6. NOT TO SCALE.

REVISIONS								
NO.	DATE	BY	NO.	DATE	BY	NO.	DATE	BY
1	9-64		6	6-84				
2	6-68		7	7-92	MSM			
3	4-70		8	11-01	MSM			
4	10-76		9	3-05	MSM			
5	7-78							

SCALES SHOWN ARE FOR 11" X 17" PRINTS ONLY

CADD FILE NAME d5__0305.std

DRWG. ORIG. DATE: APRIL, 1961

IDAHO TRANSPORTATION DEPARTMENT

BOISE IDAHO

ASSISTANT CHIEF ENGINEER (DEVELOPMENT)

CHIEF ENGINEER

STANDARD DRAWING

GALVANIZED STEEL APRONS FOR PIPE CULVERTS

English

STANDARD DRWG. NO.

D-5

SHEET 1 OF 1

PROFESSIONAL ENGINEER * LAND SURVEYOR REGISTERED 2240 3/4/05 STATE OF IDAHO MILFORD MILLER

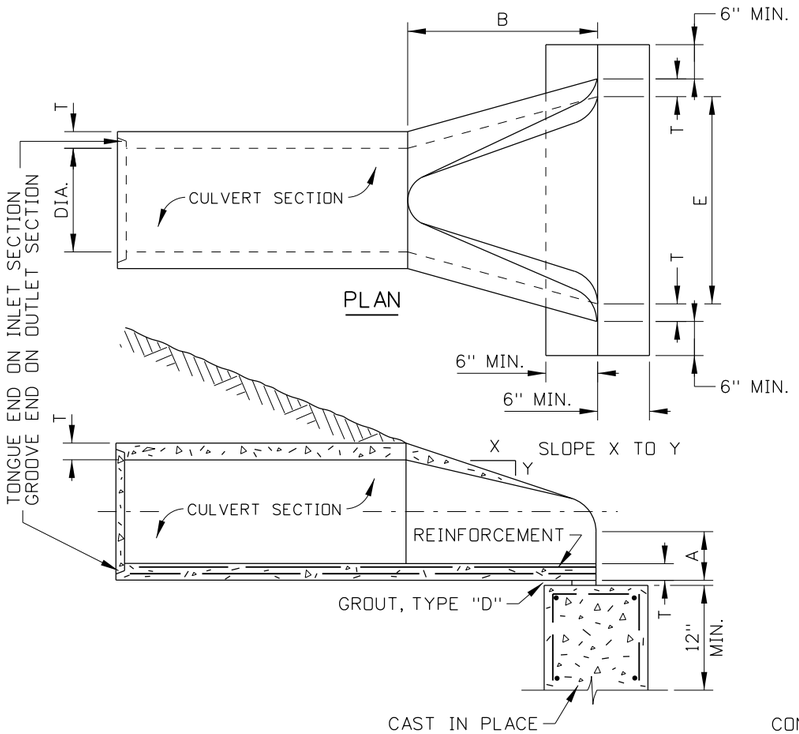

LONGITUDINAL SECTION
(FOR 12" TO 54" DIA. PIPE)

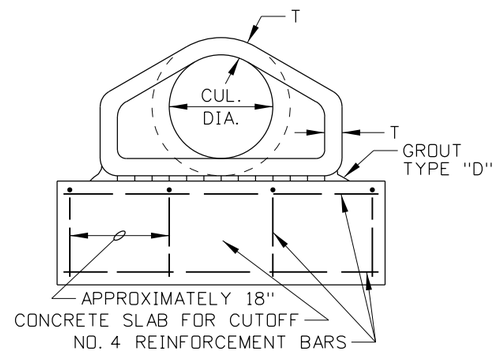

END VIEW
(FOR 12" TO 54" DIA. PIPE)

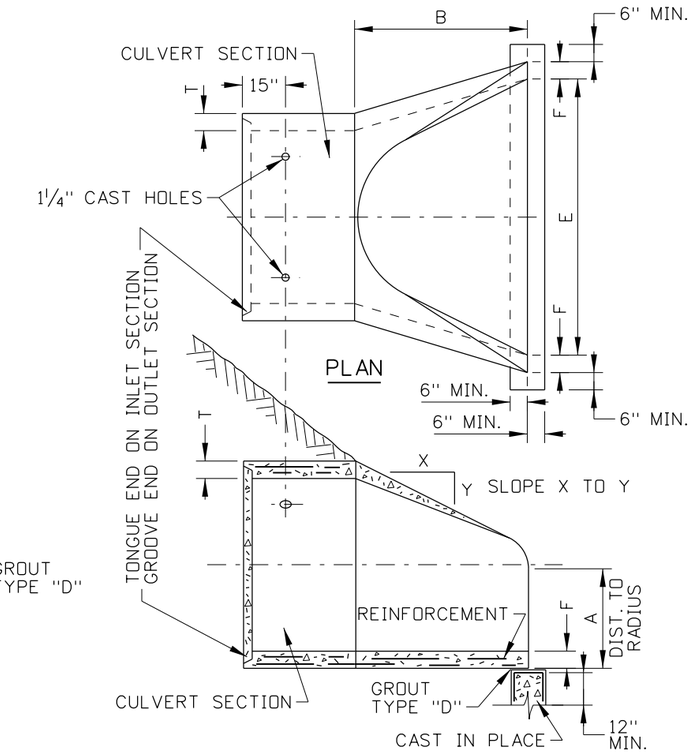

LONGITUDINAL SECTION
(FOR 60" TO 84" DIA. PIPE)

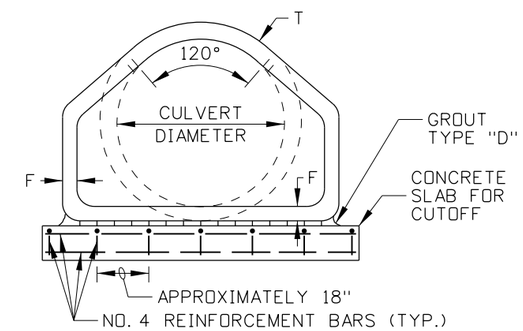

END VIEW
(FOR 60" TO 84" DIA. PIPE)

APRON DIMENSION FOR 12" TO 54" DIA. PIPE					
DIA.	A	B	E	T	SLOPE
12"	4"-5"	1'-10" - 2'-0"	2'-0"	2"	3 TO 1
15"	6"	2'-3"	2'-6"	2¼"	3 TO 1
18"	9"-10"	2'-3"	3'-0"	2½"	3 TO 1
21"	9"	3'-0"	3'-5"	2¾"	3 TO 1
24"	9½"-10"	3'-7" - 3'-7½"	4'-0"	3"	3 TO 1
27"	10½"	4'-1½"	4'-6"	3¼"	3 TO 1
30"	1'-0"	4'-6"	5'-0"	3½"	3 TO 1
36"	1'-3"	5'-3" - 5'-4"	6'-0"	4"	3 TO 1
42"	1'-9" - 1'-10"	5'-3" - 5'-4"	6'-6"	4½"	3 TO 1
48"	2'-0"	6'-0"	7'-0"	5"	3 TO 1
54"	2'-3"	5'-5"	7'-6"	5½"	2 TO 1

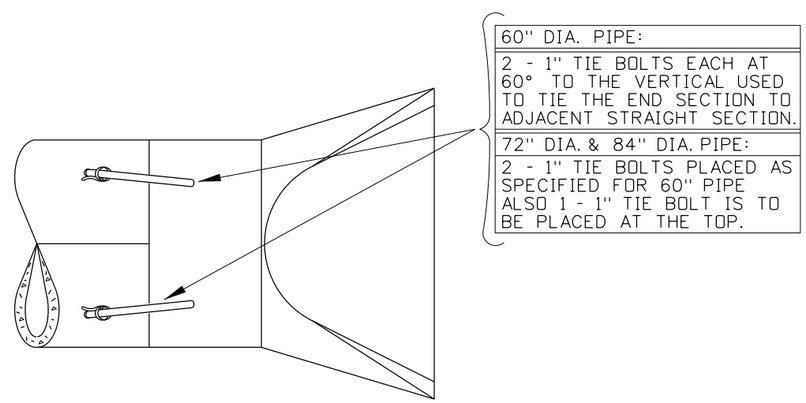

ANCHORING DETAIL

APRON DIMENSION FOR 60" TO 84" DIA. PIPE						
DIA.	A	B	E	F	T	SLOPE
60"	2'-11"	5'-0"	8'-0"	5"	6"	2 TO 1
72"	3'-0"	6'-6"	9'-0"	6"	7"	1.86 TO 1
84"	3'-0"	7'-6½"	10'-0"	6½"	8"	1.5 TO 1

NOTES

1. TONGUE AND GROOVE JOINTS ARE SHOWN ON THE DRAWING FOR EXAMPLE ONLY. OTHER JOINTS MAY BE APPROVED BY THE ENGINEER PRIOR TO INSTALLATION.
2. NOT TO SCALE.

ORIGINAL STORED AT: ITD, Headquarters 3311 West State Boise, Idaho

ORIGINAL SIGNED BY: RYAN D. LANCASTER
DATE ORIGINAL SIGNED: DECEMBER 17, 2012

REVISIONS								
NO.	DATE	BY	NO.	DATE	BY	NO.	DATE	BY
1	4-66							
2	8-67							
3	2-00	MSM						
4	10-05	MSM						
5	12-12	RDL						

SCALES SHOWN ARE FOR 11" X 17" PRINTS ONLY

CADD FILE NAME: d5a_1212.std

DRAWING DATE: MARCH, 1966

IDAHO TRANSPORTATION DEPARTMENT

BOISE IDAHO

ORIGINAL SIGNED BY: LOREN THOMAS
HIGHWAYS PROGRAM OVERSIGHT ENGINEER
ORIGINAL SIGNED BY: TOM COLE
CHIEF ENGINEER

STANDARD DRAWING

CONCRETE APRONS FOR PIPE CULVERTS

English

STANDARD DRAWING NO.

D-5-A

SHEET 1 OF 1

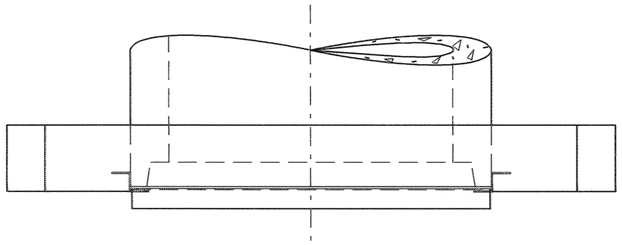

PLAN

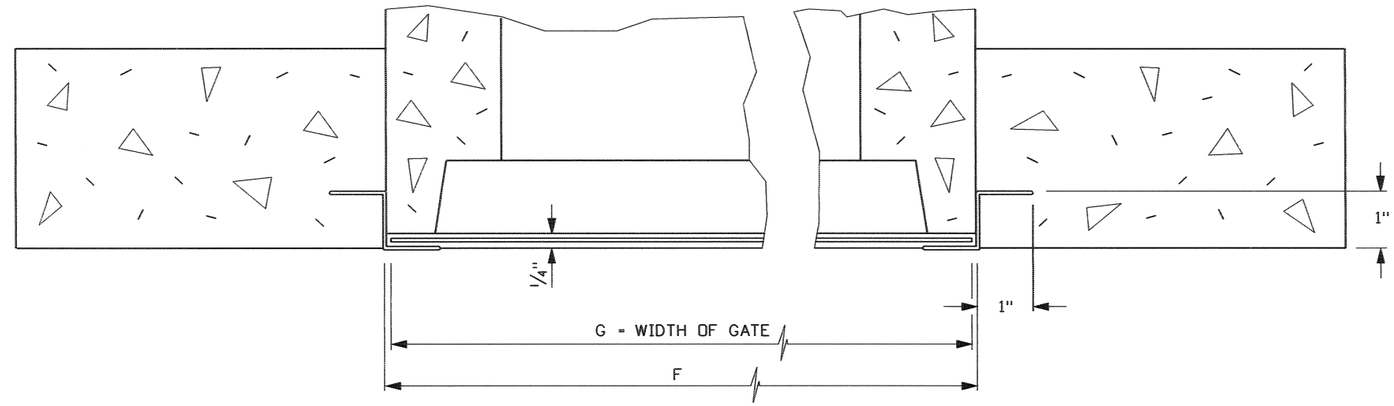

SECTION A-A

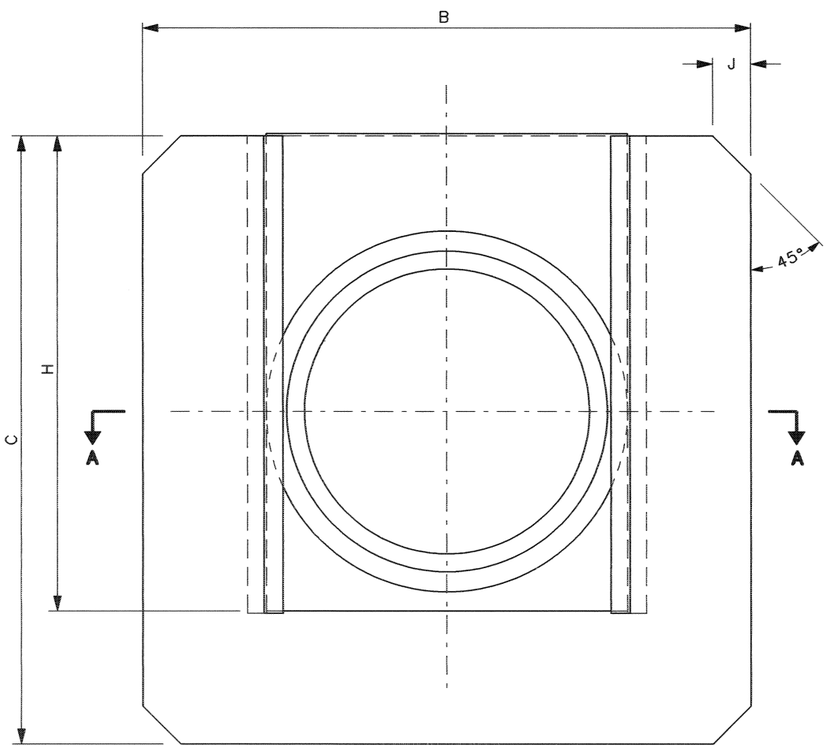

END ELEVATION

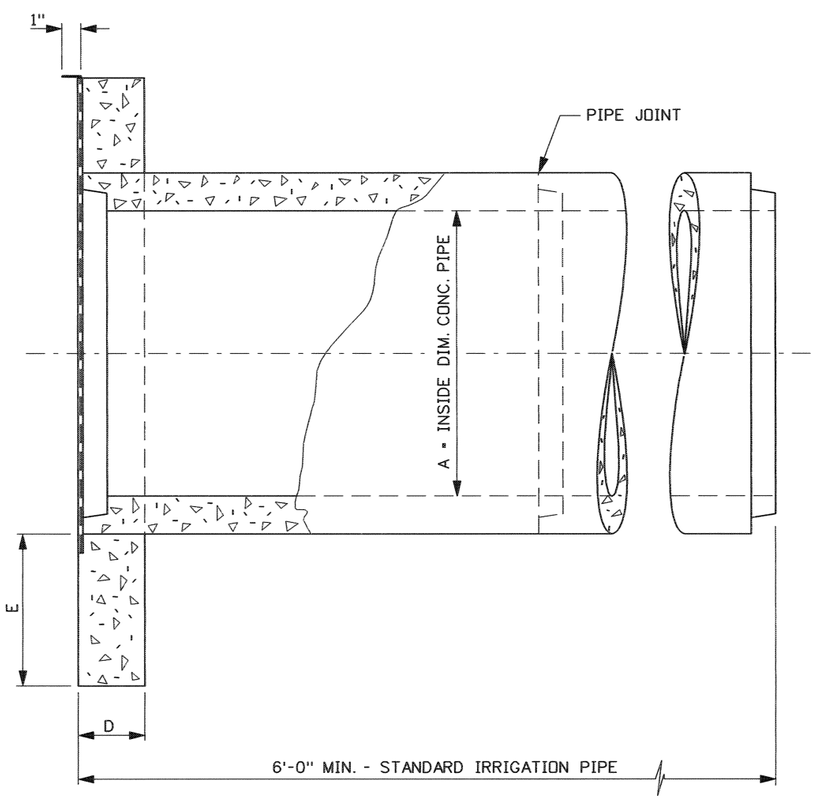

SIDE ELEVATION

MINIMUM DIMENSION TABLE								
PIPE DIA.	MINIMUM DIMENSIONS (INCHES)							
A	B	C	D	E	F	G	H	J
4	15	15	2½	3	8¼	8	13	1½
6	15	15	2½	3	8¼	8	13	1½
8	22	22	3	6	12½	12¼	17	2
10	22	22	3	6	12½	12¼	17	2
12	27	27	3	7	16¼	16	21	2
15	32	32	3½	8	19¼	19	25	2
18	36	36	4	9	23¾	23½	28	3
21	42	42	4	11	26¼	26	32	3
24	54	54	4	15	30¼	30	40	3
30	60	60	4	19	36¼	36	42	3

NOTES

1. SLIDE GATE AND GUIDES SHALL BE 16 GAGE GALVANIZED STEEL.
2. NO SCALE IS REPRESENTED ON THESE DRAWING ILLUSTRATIONS.

REVISIONS								
NO.	DATE	BY	NO.	DATE	BY	NO.	DATE	BY
1	8-64							
2	11-86	GB						
3	9-01	MSM						
4	3-05	MSM						

SCALES SHOWN ARE FOR 11" X 17" PRINTS ONLY

CADD FILE NAME d6__0305.std

DRWG. ORIG. DATE: APRIL, 1961

IDAHO TRANSPORTATION DEPARTMENT

BOISE IDAHO

P. Q. Thomas
ASSISTANT CHIEF ENGINEER (DEVELOPMENT)

Steven C. Hutchinson
CHIEF ENGINEER

STANDARD DRAWING

PRECAST CONCRETE HEADGATE

English

STANDARD DRWG. NO.

D-6

SHEET 1 OF 1

PROFESSIONAL ENGINEER * LAND SURVEYOR
BERT STERLING
2240
3/4/05
STATE OF IDAHO
MILFORD MILLER

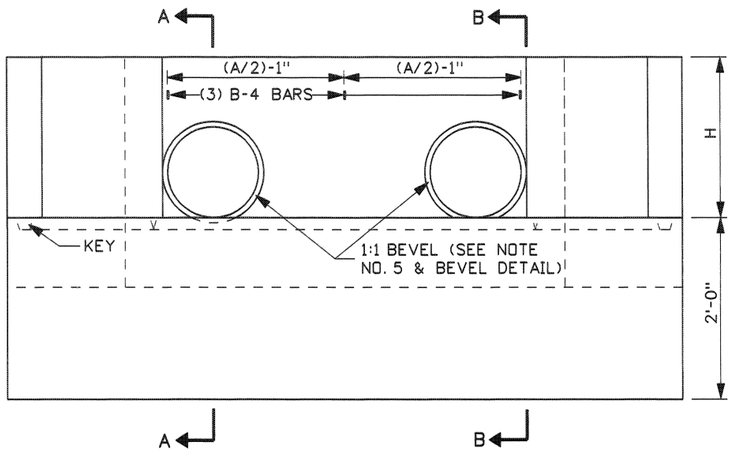

ELEVATION

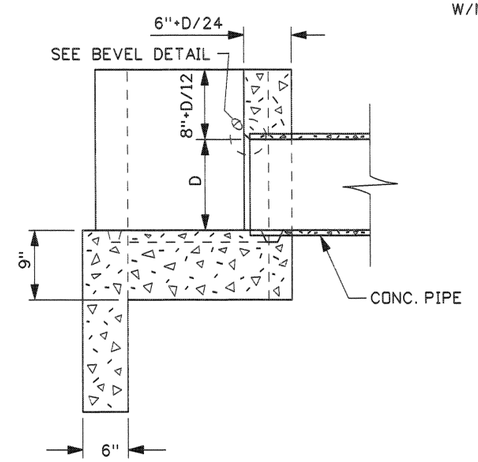

SECTION A-A

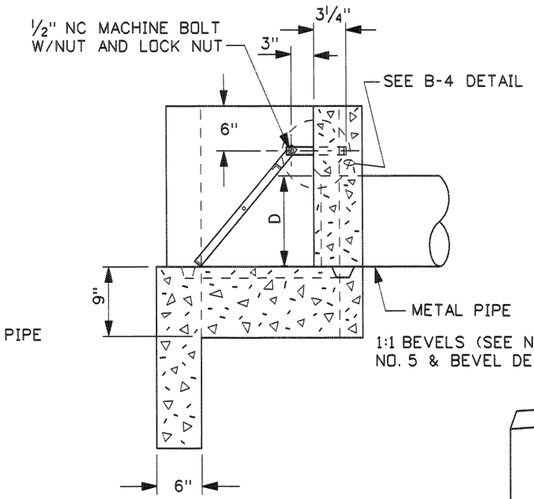

SECTION B-B

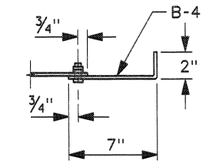

B-4 DETAIL

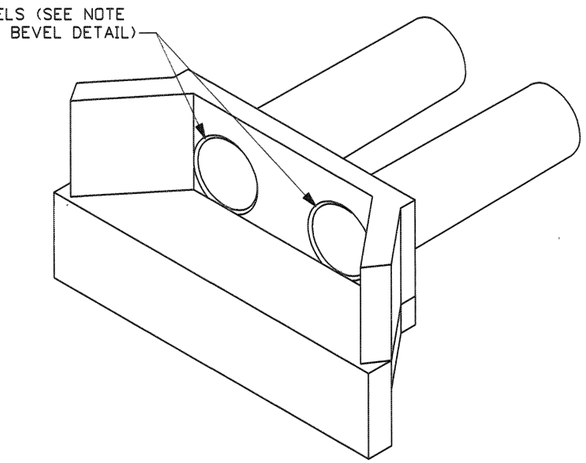

ISOMETRIC VIEW

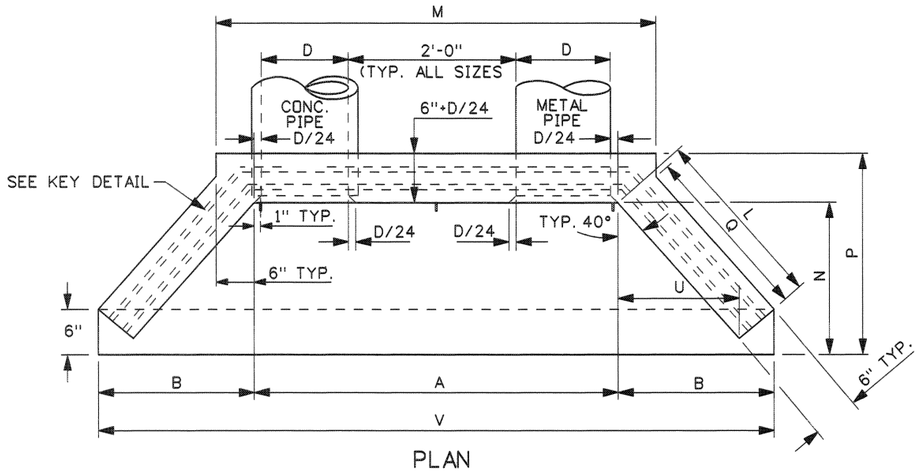

PLAN

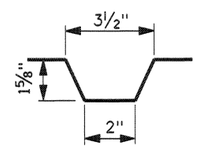

KEY DETAIL

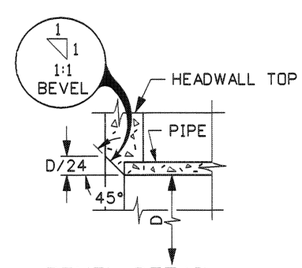

BEVEL DETAIL

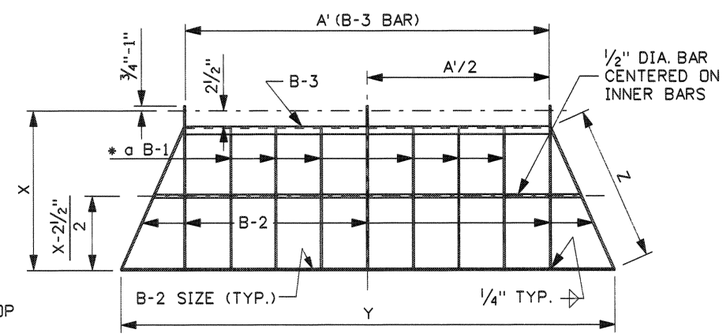

* a BARS SHALL BE EQUALLY SPACED IN GRATE NOT TO EXCEED 8" CENTER TO CENTER OR LESS THAN 6" CENTER TO CENTER.

INLET GRATE DETAIL

REVISIONS								
NO.	DATE	BY	NO.	DATE	BY	NO.	DATE	BY
1	2-68		6	12-92	TMR			
2	9-68		7	10-01	MSM			
3	10-69		8	6-03	MSM			
4	4-90	GB	9	3-05	MSM			
5	3-92	MSM						

SCALES SHOWN ARE FOR 11" X 17" PRINTS ONLY

CADD FILE NAME d7__0305.std

DRWG. ORIG. DATE: MAY, 1964

IDAHO TRANSPORTATION DEPARTMENT

BOISE IDAHO

P. D. Thomas
ASSISTANT CHIEF ENGINEER (DEVELOPMENT)

Steven C. Lockwood
CHIEF ENGINEER

STANDARD DRAWING

CONCRETE HEADWALL FOR TWIN PIPE CULVERTS

REQUIRES SHEET 2 OF 2

English

STANDARD DRWG. NO.

D-7

SHEET 1 OF 2

PROFESSIONAL ENGINEER * LAND SURVEYOR REGISTERED 2240 STATE OF IDAHO MILFORD MILLER 3/4/05

D-7 METAL REINFORCEMENT TABLE

MARK	LOCATION	BAR SIZE	SKETCH
F-1	FLOOR	NO. 4	
H-1A	HORIZ. IN TOP OF WING WALL & IN FLOOR BACKWALL	NO. 4	130°
H-1B	HORIZ. IN WING WALL BETWEEN H-1As' (PAIRS)	NO. 4	2" MIN., 2"*TYP., 2" MIN., PIPE, H-1C, PIPE, W-1A, 130°
H-1C	HORIZ. IN WING BACKWALL BTWN. PIPES AS CONTINUATION OF H-1Bs'	NO. 4	2", VARIES, 2", PIPE, PIPE
L-1	TOP & BOTTOM OF INLET LIP IN FLOOR	NO. 4	
L-2	VERTICAL IN FLOOR, & INLET LIP	NO. 4	
W-1A	EACH SIDE OF PIPE IN BACKWALL, FLOOR, & INLET LIP	NO. 4	90°, 90°
W-1B	IN FLOOR, & INLET LIP, UNDER PIPES	NO. 4	90°
W-1C	IN FLOOR, & INLET LIP	NO. 4	90°
W-2	VERTICAL IN WING WALLS	NO. 4	

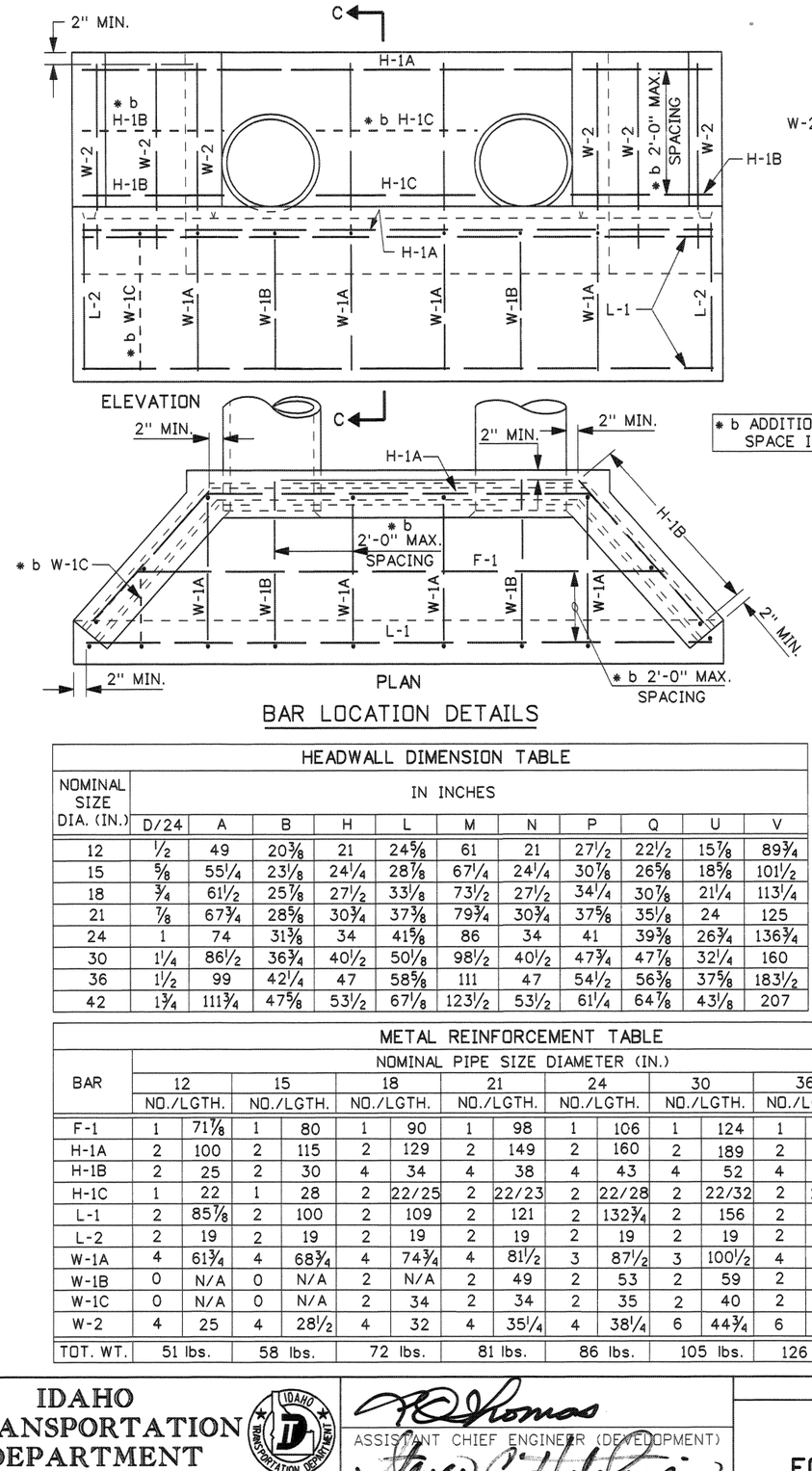

BAR LOCATION DETAILS

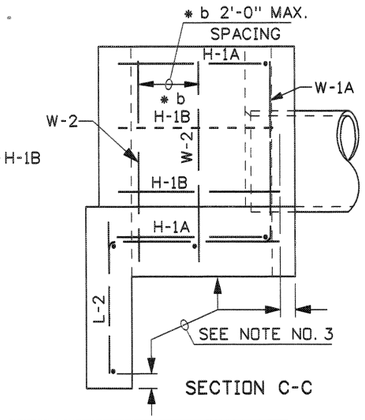

* b ADDITIONAL BARS NEEDED WHEN SPACE IS GREATER THAN 2'-0"

CONCRETE QUANTITY TABLE

NOMINAL SIZE DIA. (IN.)	CONCRETE (C.Y.) WINGS & BCKWL.	FLOOR	LIP	TOTAL
12	0.3	0.4	0.2	0.9
15	0.4	0.6	0.2	1.2
18	0.5	0.7	0.2	1.4
21	0.6	0.8	0.3	1.7
24	0.7	1.0	0.3	2.0
30	1.0	1.3	0.3	2.6
36	1.3	1.7	0.4	3.4
42	1.7	2.1	0.5	4.3

GRATE DIMENSION & MATERIALS TABLE

IN INCHES

NOMINAL SIZE DIA. (IN.)	DIMENSIONS A'	* c X	Y	Z	BAR SIZES B-1	B-2	B-3	B-4
12	48	19 3/16	65 1/8	19 5/16	1x1/4	1 1/4x1/4	1 1/4x1 1/4x1/4	1x1/4x9
15	54 1/4	23 3/4	78 5/8	24 1/2	1x1/4	1 1/4x1/4	1 1/4x1 1/4x1/4	1x1/4x9
18	60 1/2	28 3/8	88 5/8	29 7/16	1x1/4	1 1/4x1/4	1 1/4x1 1/4x1/4	1x1/4x9
21	66 3/4	32 15/16	100 3/4	34 7/8	1x1/4	1 1/4x1/4	1 1/4x1 1/4x1/4	1x1/4x9
24	73	37 9/16	114 5/8	40 3/4	1x1/4	1 1/4x1/4	1 1/4x1 1/4x1/4	1x1/4x9
30	85 1/2	46 3/4	135 1/2	50 7/8	1 1/4x1/4	1 1/2x1/4	1 1/2x1 1/2x1/4	1 1/2x1/4x9
36	98	55 7/8	158	61 1/8	1 1/2x1/4	1 3/4x1/4	1 3/4x1 3/4x1/4	1 3/4x1/4x9
42	110 1/2	65 1/16	182	72 1/16	1 3/4x1/4	2 1/4x3/8	2 1/4x2 1/2x3/8	2 1/4x3/8x9

* c ALLOW 3/4"-1" EXTRA BAR LENGTH FOR HOLE FABRICATION

HEADWALL DIMENSION TABLE

IN INCHES

NOMINAL SIZE DIA. (IN.)	D/24	A	B	H	L	M	N	P	Q	U	V
12	1/2	49	20 3/8	21	24 5/8	61	21	27 1/2	22 1/2	15 7/8	89 3/4
15	5/8	55 1/4	23 1/8	24 1/4	28 7/8	67 1/4	24 1/4	30 7/8	26 5/8	18 5/8	101 1/2
18	3/4	61 1/2	25 7/8	27 1/2	33 1/8	73 1/2	27 1/2	34 1/4	30 7/8	21 1/4	113 1/4
21	7/8	67 3/4	28 5/8	30 3/4	37 3/8	79 3/4	30 3/4	37 5/8	35 1/8	24	125
24	1	74	31 3/8	34	41 5/8	86	34	41	39 3/8	26 3/4	136 3/4
30	1 1/4	86 1/2	36 3/4	40 1/2	50 1/8	98 1/2	40 1/2	47 3/4	47 7/8	32 1/4	160
36	1 1/2	99	42 1/4	47	58 5/8	111	47	54 1/2	56 3/8	37 5/8	183 1/2
42	1 3/4	111 3/4	47 5/8	53 1/2	67 1/8	123 1/2	53 1/2	61 1/4	64 7/8	43 1/8	207

METAL REINFORCEMENT TABLE

NOMINAL PIPE SIZE DIAMETER (IN.)

BAR	12 NO./LGTH.		15 NO./LGTH.		18 NO./LGTH.		21 NO./LGTH.		24 NO./LGTH.		30 NO./LGTH.		36 NO./LGTH.		42 NO./LGTH.	
F-1	1	71 7/8	1	80	1	90	1	98	1	106	1	124	1	143	2	145/175
H-1A	2	100	2	115	2	129	2	149	2	160	2	189	2	218	2	248
H-1B	2	25	2	30	4	34	4	38	4	43	4	52	4	58	6	67
H-1C	1	22	1	28	2	22/25	2	22/23	2	22/28	2	22/32	2	21/36	3	29/20/40
L-1	2	85 7/8	2	100	2	109	2	121	2	132 3/4	2	156	2	179	2	202
L-2	2	19	2	19	2	19	2	19	2	19	2	19	2	19	2	19
W-1A	4	61 3/4	4	68 3/4	4	74 3/4	4	81 1/2	3	87 1/2	3	100 1/2	4	114	4	127
W-1B	0	N/A	0	N/A	2	N/A	2	49	2	53	2	59	2	66	2	68
W-1C	0	N/A	0	N/A	2	34	2	34	2	35	2	40	2	43	2	47
W-2	4	25	4	28 1/2	4	32	4	35 1/4	4	38 1/4	6	44 3/4	6	51	6	57 1/2
TOT. WT.	51 lbs.		58 lbs.		72 lbs.		81 lbs.		86 lbs.		105 lbs.		126 lbs.		158 lbs.	

NOTES

1. THIS HEADWALL SHALL BE USED ONLY WHEN PROTECTED BY GUARDRAIL OR INSTALLED OUTSIDE THE CLEAR ZONE.
2. CAST-IN-PLACE HEADWALLS SHALL CONFORM TO SECTION 609 - MINOR STRUCTURES, OF THE CURRENT ITD STANDARD SPECIFICATIONS FOR HIGHWAY CONSTRUCTION.
3. THE METAL REINFORCEMENT SHALL BE NO. 4 BARS. ALL REINFORCEMENT SHALL HAVE A MINIMUM CONCRETE COVER OF 2" AND 3" MINIMUM COVER IF CAST AGAINST EARTH.
4. ALL EDGES TO HAVE 3/4" CHAMFER OR TOOLED EDGES.
5. ALL PIPE CULVERTS WITH A CONCRETE HEADWALL SHALL HAVE THE INLET HEADWALLS BEVELED. USE ENTRANCE LOSS COEFFICIENT K_e= 0.2 FOR BEVELED ENTRANCES.
6. THE METAL FOR THE GRATE SHALL MEET THE REQUIREMENTS OF ASTM A 36. WELDING OF THE METAL GRATE SHALL MEET THE REQUIREMENTS OF THE AMERICAN WELDING SOCIETY D1.1. GRATES FOR INLET HEADWALLS WILL BE REQUIRED ONLY WHEN SHOWN ON THE ROADWAY PLANS. GRATES NEED NOT BE PAINTED OR GALVANIZED.
7. USE CONCRETE, METAL, OR PLASTIC PIPE WITH HEADWALL.
8. NOT TO SCALE.

PROFESSIONAL ENGINEER * LAND SURVEYOR REGISTERED 2240 3/4/05 STATE OF IDAHO MILFORD MILLER

REVISIONS								
NO.	DATE	BY	NO.	DATE	BY	NO.	DATE	BY
1	2-68		6	12-92	TMR			
2	9-68		7	10-01	MSM			
3	10-69		8	6-03	MSM			
4	4-90	GB	9	3-05	MSM			
5	3-92	MSM						

SCALES SHOWN ARE FOR 11" X 17" PRINTS ONLY

CADD FILE NAME d7__0305.std

DRWG. ORIG. DATE: MAY, 1964

IDAHO TRANSPORTATION DEPARTMENT

BOISE IDAHO

ASSISTANT CHIEF ENGINEER (DEVELOPMENT)

CHIEF ENGINEER

STANDARD DRAWING

CONCRETE HEADWALL FOR TWIN PIPE CULVERTS

REQUIRES SHEET 1 OF 2

English

STANDARD DRWG. NO.

D-7

SHEET 2 OF 2

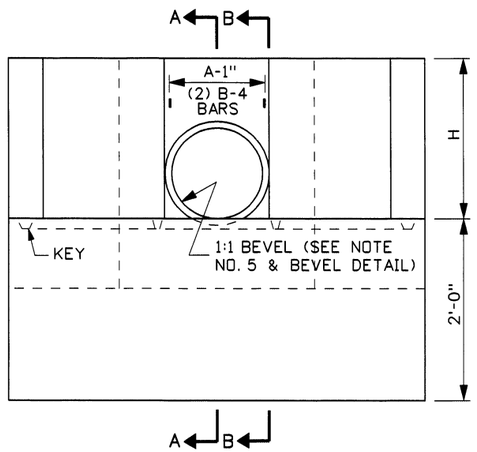

ELEVATION

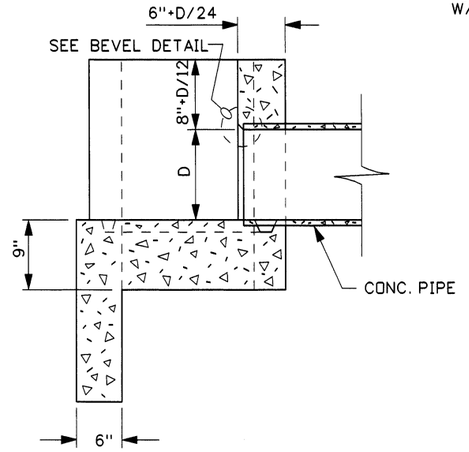

SECTION A-A

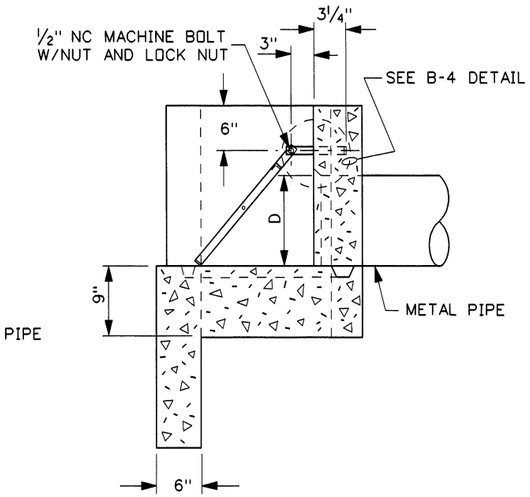

SECTION B-B

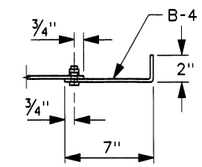

B-4 DETAIL

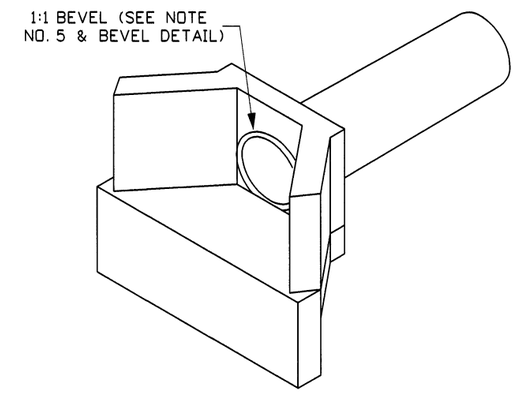

ISOMETRIC VIEW

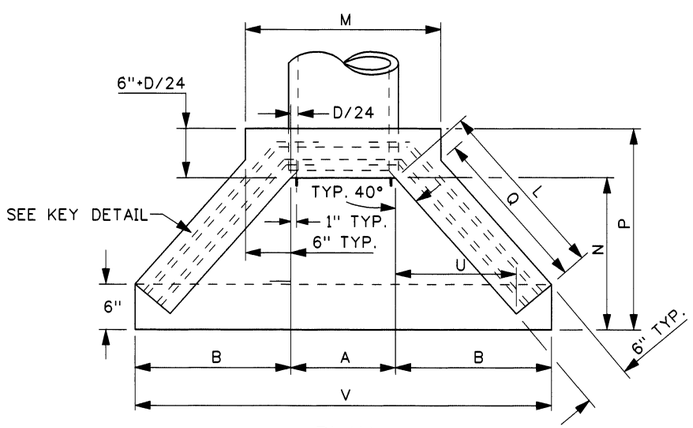

PLAN

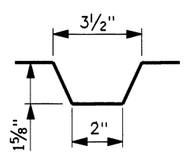

KEY DETAIL

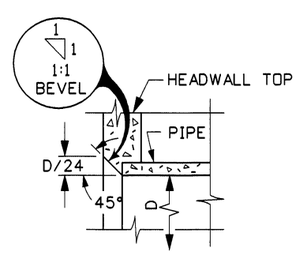

BEVEL DETAIL

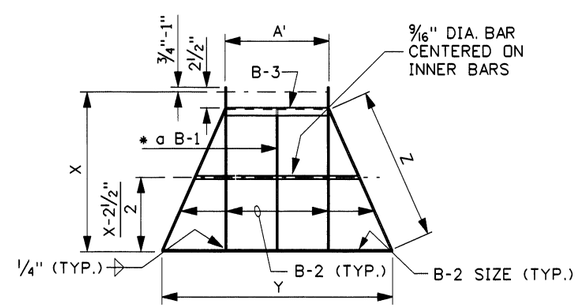

* @ BARS SHALL BE EQUALLY SPACED IN GRATE NOT TO EXCEED 8" CENTER TO CENTER OR LESS THAN 6" CENTER TO CENTER.

INLET GRATE DETAIL

REVISIONS								
NO.	DATE	BY	NO.	DATE	BY	NO.	DATE	BY
1	2-64		6	12-92	TMR			
2	2-68		7	10-01	MSM			
3	9-68		8	3-05	MSM			
4	10-69							
5	3-92	MSM						

SCALES SHOWN ARE FOR 11" X 17" PRINTS ONLY

CADD FILE NAME d8__0305.std

DRWG. ORIG. DATE: DECEMBER, 1963

IDAHO TRANSPORTATION DEPARTMENT

BOISE IDAHO

ASSISTANT CHIEF ENGINEER (DEVELOPMENT)

CHIEF ENGINEER

STANDARD DRAWING

CONCRETE HEADWALL FOR SINGLE PIPE CULVERT

REQUIRES SHEET 2 OF 2

English

STANDARD DRWG. NO.

D-8

SHEET 1 OF 2

PROFESSIONAL ENGINEER * LAND SURVEYOR
RECISTERED
2240
3/4/05
STATE OF IDAHO
MILFORD MILLER

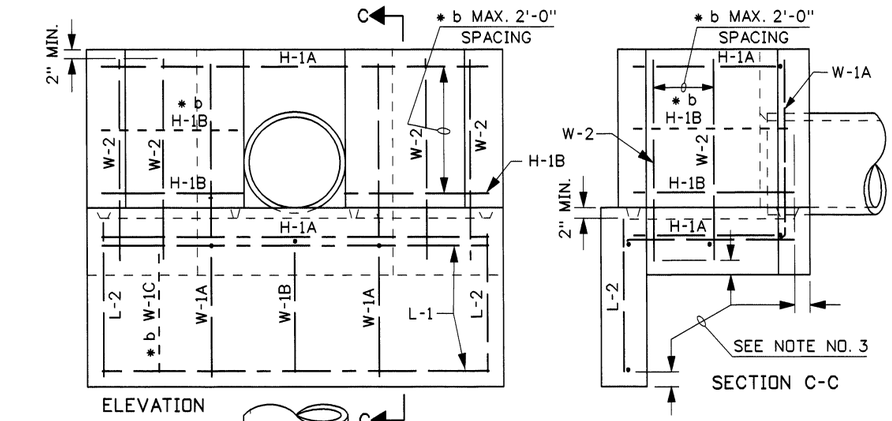

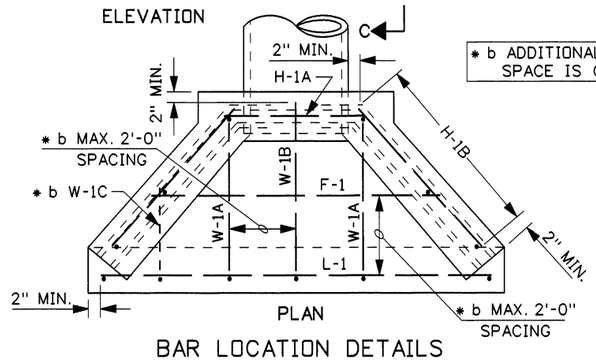

* b ADDITIONAL BARS NEEDED WHEN SPACE IS GREATER THAN 2'-0"

BAR LOCATION DETAILS

CONCRETE TABLE				
NOMINAL SIZE DIA. (IN.)	CONCRETE (C.Y.)			
	WINGS & BCKWL.	FLOOR	LIP	TOTAL
12	0.2	0.3	0.1	0.6
15	0.3	0.3	0.1	0.7
18	0.3	0.4	0.2	0.9
21	0.4	0.5	0.2	1.1
24	0.5	0.6	0.2	1.3
30	0.8	0.8	0.2	1.8
36	1.0	1.0	0.3	2.3
42	1.3	1.3	0.3	2.9

GRATE DIMENSION & MATERIALS TABLE								
CULVERT SIZE DIA. (IN.)	IN INCHES							
	DIMENSIONS				BAR SIZES			
	A'	* c X	Y	Z	B-1	B-2	B-3	B-4
12	12	19 1/4	29 1/2	18 7/8	1x1/4	1 1/4x1/4	1 1/4x1 1/4x1/4	1x1/4x9
15	15 1/4	24	39 1/2	24 3/4	1x1/4	1 1/4x1/4	1 1/4x1 1/4x1/4	1x1/4x9
18	18 1/2	28	46 1/2	29	1x1/4	1 1/4x1/4	1 1/4x1 1/4x1/4	1x1/4x9
21	21 3/4	33	55 3/4	35	1x1/4	1 1/4x1/4	1 1/4x1 1/4x1/4	1x1/4x9
24	25	37 1/2	66 1/2	40 5/8	1x1/4	1 1/4x1/4	1 1/4x1 1/4x1/4	1x1/4x9
30	31 1/2	46 3/4	81 1/2	50 7/8	1 1/4x1/4	1 1/2x1/4	1 1/2x1 1/2x1/4	1 1/2x1/4x9
36	38	56	98	61 1/4	1 1/2x1/4	1 3/4x1/4	1 3/4x1 3/4x1/4	1 3/4x1/4x9
42	44 1/2	65	116	72	1 3/4x1/4	2 1/4x3/8	2 1/4x2 1/2x3/8	2 1/4x3/8x9

* c ALLOW 3/4"-1" EXTRA BAR LENGTH FOR HOLE FABRICATION

METAL REINFORCEMENT TABLE			
MARK	LOCATION	BAR SIZE	SKETCH
F-1	FLOOR	NO. 4	
L-1	TOP & BOTTOM OF INLET LIP IN FLOOR	NO. 4	
H-1A	HORIZ. IN TOP OF WING WALL & IN FLOOR BACK WALL	NO. 4	130°
H-1B	HORIZ. IN WING WALL BETWEEN H-1As' (PAIRS ONLY)	NO. 4	2" MIN. 2" MIN. PIPE W-1A
W-1A	EACH SIDE OF PIPE IN BACKWALL, FLOOR, & INLET LIP	NO. 4	90° 90°
W-1B	IN FLOOR, & INLET LIP	NO. 4	90°
W-1C	IN FLOOR, & INLET LIP	NO. 4	90°
L-2	VERTICAL IN FLOOR, & INLET LIP	NO. 4	
W-2	VERTICAL IN WING WALLS	NO. 4	

HEADWALL DIMENSION TABLE											
NOMINAL SIZE DIA. (IN.)	IN INCHES										
	D/24	A	B	H	L	M	N	P	Q	U	V
12	1/2	13	20 3/8	21	24 5/8	25	21	27 1/2	22 1/2	15 7/8	53 3/4
15	5/8	16 1/4	23 1/8	24 1/4	28 7/8	28 1/4	24 1/4	30 7/8	26 5/8	18 5/8	62 1/2
18	3/4	19 1/2	25 7/8	27 1/2	33 1/8	31 1/2	27 1/2	34 1/4	30 7/8	21 1/4	71 1/4
21	7/8	22 3/4	28 5/8	30 3/4	37 3/8	34 3/4	30 3/4	37 5/8	35 1/8	24	80
24	1	26	31 3/8	34	41 5/8	38	34	41	39 3/8	26 3/4	88 3/4
30	1 1/4	32 1/2	36 3/4	40 1/2	50 1/8	44 1/2	40 1/2	47 3/4	47 7/8	32 1/4	106
36	1 1/2	39	42 1/4	47	58 5/8	51	47	54 1/2	56 3/8	37 5/8	123 1/2
42	1 3/4	45 1/2	47 5/8	53 1/2	67 1/8	57 1/2	53 1/2	61 1/4	64 7/8	43 1/8	140 3/4

METAL REINFORCEMENT TABLE																
BAR	NOMINAL PIPE SIZE DIAMETER (IN.)															
	12		15		18		21		24		30		36		42	
	NO./LGTH.		NO./LGTH.		NO./LGTH.		NO./LGTH.		NO./LGTH.		NO./LGTH.		NO./LGTH.		NO./LGTH.	
F-1	1	35 3/4	1	41 1/2	1	49	1	53 1/2	1	58	1	70 3/4	1	83	2	79/109
H-1A	2	64	2	76	2	87 3/4	2	104	2	112	2	135	2	158	2	182
H-1B	2	25	2	30	4	34	4	38	4	43	4	52	4	58	6	67
L-1	2	49	2	59	2	67	2	76	2	84 3/4	2	102	2	119	2	136 3/4
L-2	2	19	2	19	2	19	2	19	2	19	2	19	2	19	2	19
W-1A	2	61 3/4	2	68 3/4	2	74 3/4	2	81 1/2	2	87 1/2	2	100 1/2	2	114	2	127
W-1B	0	N/A	0	N/A	0	N/A	1	49	1	53	1	59	1	62	1	68
W-1C	0	N/A	0	N/A	2	34	2	35	2	36	2	40	2	43	2	47
W-2	4	25	4	28 1/2	4	32	4	35 1/4	4	38 1/4	6	44 3/4	6	51	6	57 1/2
TOT. WT.	32 lbs.		37 lbs.		49 lbs.		58 lbs.		62 lbs.		78 lbs.		89 lbs.		113 lbs.	

NOTES

1. THIS HEADWALL SHALL BE USED ONLY WHEN PROTECTED BY GUARDRAIL OR INSTALLED OUTSIDE THE CLEAR ZONE.
2. CAST-IN-PLACE HEADWALLS SHALL CONFORM TO SECTION 609 - MINOR STRUCTURES, OF THE CURRENT ITD STANDARD SPECIFICATIONS FOR HIGHWAY CONSTRUCTION.
3. THE METAL REINFORCEMENT SHALL BE NO. 4 BARS. ALL REINFORCEMENT SHALL HAVE A MINIMUM CONCRETE COVER OF 2" AND 3" MINIMUM COVER IF CAST AGAINST EARTH.
4. ALL EDGES TO HAVE 3/4" CHAMFER OR TOOLED EDGES.
5. ALL PIPE CULVERTS WITH A CONCRETE HEADWALL SHALL HAVE THE INLET HEADWALLS BEVELED. USE ENTRANCE LOSS COEFFICIENT K_e= 0.2 FOR BEVELED ENTRANCES.
6. THE METAL FOR THE GRATE SHALL MEET THE REQUIREMENTS OF ASTM A 36. WELDING OF THE METAL GRATE SHALL MEET THE REQUIREMENTS OF THE AMERICAN WELDING SOCIETY D1.1. GRATES FOR INLET HEADWALLS WILL BE REQUIRED ONLY WHEN SHOWN ON THE ROADWAY PLANS. GRATES NEED NOT BE PAINTED OR GALVANIZED.
7. USE CONCRETE, METAL, OR PLASTIC PIPE WITH HEADWALL (CONCRETE PIPE SHOWN ON DRAWING).
8. NOT TO SCALE.

REVISIONS								
NO.	DATE	BY	NO.	DATE	BY	NO.	DATE	BY
1	2-64		6	12-92	TMR			
2	2-68		7	10-01	MSM			
3	9-68		8	3-05	MSM			
4	10-69							
5	3-92	MSM						

SCALES SHOWN ARE FOR 11" X 17" PRINTS ONLY

CADD FILE NAME d8__0305.std

DRWG. ORIG. DATE: DECEMBER, 1963

IDAHO TRANSPORTATION DEPARTMENT

BOISE IDAHO

ASSISTANT CHIEF ENGINEER (DEVELOPMENT)

CHIEF ENGINEER

STANDARD DRAWING

CONCRETE HEADWALL FOR SINGLE PIPE CULVERT

REQUIRES SHEET 1 OF 2

English

STANDARD DRWG. NO.

D-8

SHEET 2 OF 2

PROFESSIONAL ENGINEER * LAND SURVEYOR * REGISTERED 2240 3/4/05 STATE OF IDAHO MILFORD MILLER

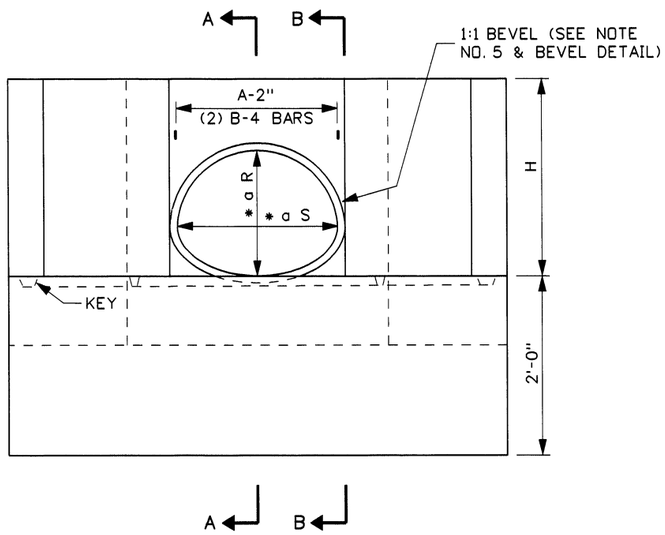

ELEVATION

* a S=SPAN & R=RISE:
"D/24" VALUE=((S+R)/2)/24
"D/12" VALUE=((S+R)/2)/12

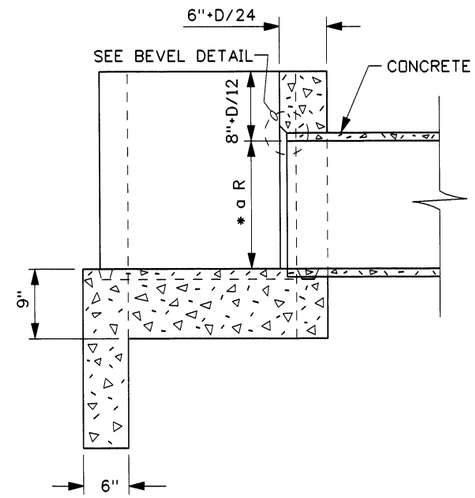

SECTION A-A

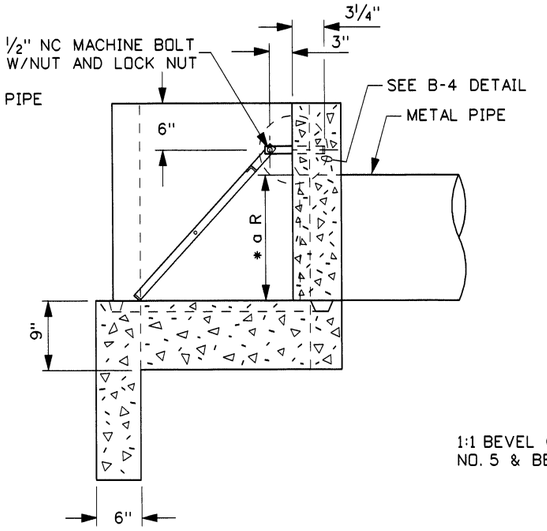

SECTION B-B

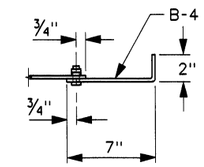

B-4 DETAIL

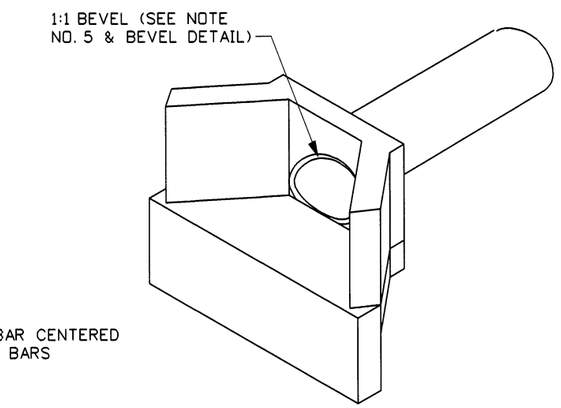

ISOMETRIC VIEW

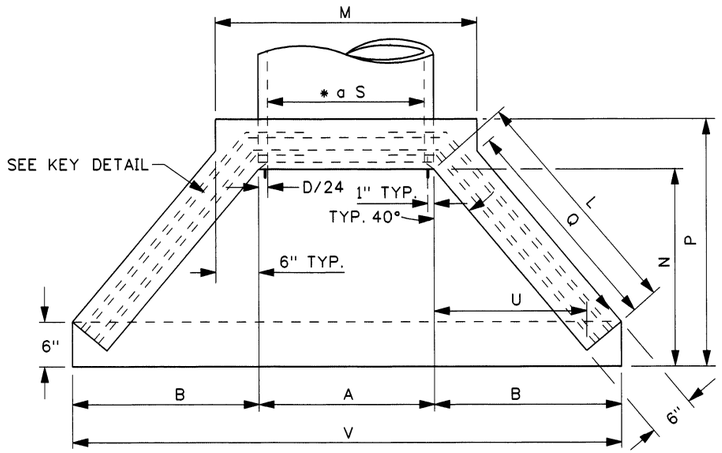

PLAN

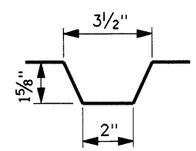

KEY DETAIL

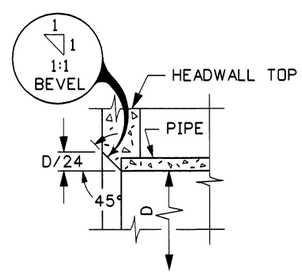

BEVEL DETAIL

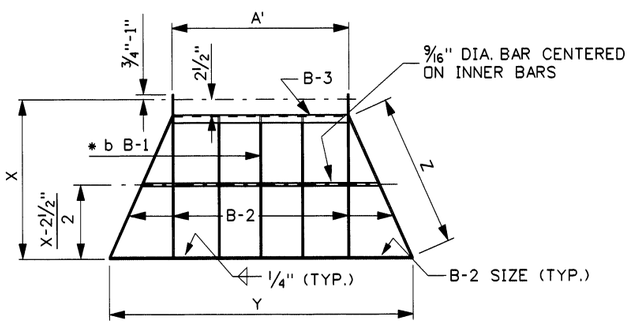

* b BARS SHALL BE EQUALLY SPACED IN GRATE NOT TO EXCEED 8" CENTER TO CENTER OR LESS THAN 6" CENTER TO CENTER.

INLET GRATE DETAIL

REVISIONS								
NO.	DATE	BY	NO.	DATE	BY	NO.	DATE	BY
1	10-69		6	10-01	MSM			
2	3-92	MSM	7	6-03	MSM			
3	12-92	TMR	8	3-05	MSM			
4	5-95	MSM						
5	4-99	MSM						

SCALES SHOWN ARE FOR 11" X 17" PRINTS ONLY

CADD FILE NAME d9__0305.std

DRWG. ORIG. DATE: AUGUST, 1968

IDAHO TRANSPORTATION DEPARTMENT

BOISE IDAHO

ASSISTANT CHIEF ENGINEER (DEVELOPMENT)

CHIEF ENGINEER

STANDARD DRAWING

CONCRETE HEADWALL FOR ARCH PIPE CULVERT

REQUIRES SHEET 2 OF 2

English

STANDARD DRWG. NO.

D-9

SHEET 1 OF 2

PROFESSIONAL ENGINEER * LAND SURVEYOR REGISTERED 2240 3/4/05 STATE OF IDAHO MILFORD MILLER

METAL REINFORCEMENT TABLE

MARK	LOCATION	BAR SIZE	SKETCH
F-1	FLOOR	NO. 4	
L-1	TOP & BOTTOM OF INLET LIP IN FLOOR	NO. 4	
H-1A	HORIZ. IN TOP OF WING WALL & IN FLOOR BACK WALL	NO. 4	130°
H-1B	HORIZ. IN WING WALL BETWEEN H-1As'	NO. 4	2" MIN., 2" MIN., PIPE, W-1A, 130°
H-2	VERT. IN BCKWL. WALL BETWEEN AROUND PIPE	NO. 4	MIN. 12" OVERLAP
W-1A	EACH SIDE OF PIPE IN BACKWALL, FLOOR, & INLET LIP	NO. 4	90°, 90°
W-1B	IN FLOOR, & INLET LIP	NO. 4	90°
W-1C	IN FLOOR, & INLET LIP	NO. 4	90°
L-2	VERTICAL IN FLOOR, & INLET LIP	NO. 4	
W-2	VERTICAL IN WING WALLS	NO. 4	

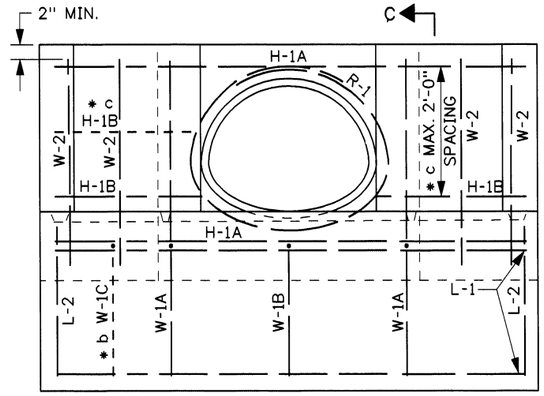

ELEVATION

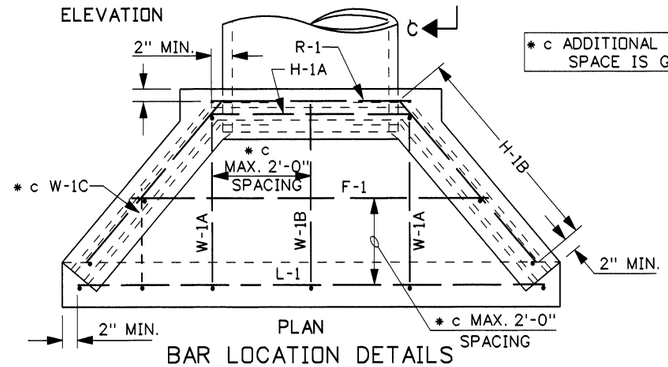

PLAN

BAR LOCATION DETAILS

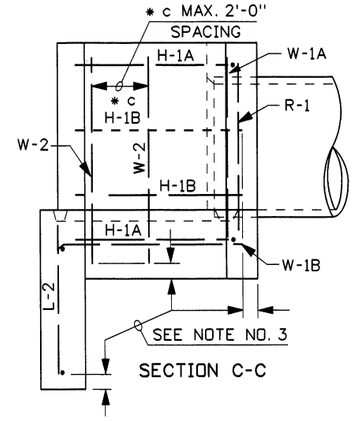

SECTION C-C

* c ADDITIONAL BARS NEEDED WHEN SPACE IS GREATER THAN 2'-0"

CONCRETE QUANTITY TABLE

CULVERT SIZE SPANxRISE	CONCRETE (C.Y.)			
	WINGS & BCKWL.	FLOOR	LIP	TOTAL
17x13	0.2	0.3	0.2	0.7
21x15	0.3	0.3	0.2	0.8
24x18	0.4	0.4	0.2	1.0
28x20	0.4	0.5	0.2	1.1
35x24	0.5	0.7	0.2	1.4
42x29	0.8	0.9	0.2	1.9
49x33	1.0	1.1	0.3	2.4

GRATE DIMENSION & MATERIALS TABLE

CULVERT SIZE SPANxRISE	IN INCHES							
	DIMENSIONS				BAR SIZES			
	A'	* d X	Y	Z	B-1	B-2	B-3	B-4
17x13	17 1/4	21	36 7/8	17 3/4	1x1/4	1 1/4x1/4	1 1/4x1 1/4x1/4	1x1/4x9
21x15	21 1/2	24 1/8	44 1/2	26 1/2	1x1/4	1 1/4x1/4	1 1/4x1 1/4x1/4	1x1/4x9
24x18	24 3/4	28 3/4	53 3/8	30 1/8	1x1/4	1 1/4x1/4	1 1/4x1 1/4x1/4	1x1/4x9
28x20	29	31 7/8	61 1/2	33 1/2	1x1/4	1 1/4x1/4	1 1/4x1 1/4x1/4	1x1/4x9
35x24	36 1/2	38 1/4	76 3/4	41	1x1/4	1 1/4x1/4	1 1/4x1 1/4x1/4	1x1/4x9
42x29	43 1/2	46	93	50	1 1/4x1/4	1 1/2x1/4	1 1/2x1 1/2x1/4	1 1/2x1/4x9
49x33	51 1/2	52 1/4	108	57 1/8	1 1/2x1/4	1 3/4x1/4	1 3/4x1 3/4x1/4	1 3/4x1/4x9

* d ALLOW 3/4"-1" EXTRA BAR LENGTH FOR HOLE FABRICATION

HEADWALL DIMENSION TABLE

CULVERT SIZE SPANxRISE	((S+R)/2)/24 VALUES	IN INCHES									
	D/24	A	B	H	L	M	N	P	Q	U	V
17x13	5/8	18 1/4	21 1/2	22 1/4	26 1/4	30 1/4	22 1/4	28 7/8	24	16 7/8	61 1/4
21x15	3/4	22 1/2	23 3/8	24 1/2	29 1/4	34 1/2	24 1/2	31 1/4	27	18 3/4	69 1/4
24x18	7/8	25 3/4	26 1/8	27 3/4	33 1/2	37 3/4	27 3/4	34 5/8	31 3/8	21 1/2	78
28x20	1	30	28	30	36 3/8	42	30	37	34 1/4	23 3/8	86
35x24	1 1/4	37 1/2	31 3/4	34 1/2	42 1/4	49 1/2	34 1/2	41 3/4	40	27 1/8	101
42x29	1 1/2	45	36 1/2	40	49 1/2	57	40	47 1/2	47 3/8	31 3/4	118
49x33	1 3/4	52 1/2	40 1/8	44 3/8	55 1/8	64 1/2	44 3/8	52 1/8	53	35 1/2	132 3/4

METAL REINFORCEMENT TABLE

BAR	NOMINAL PIPE SIZE DIAMETER (IN.)													
	17x13		21x15		24x18		28x20		35x24		42x29		49x33	
	NO./LGTH.		NO./LGTH.		NO./LGTH.		NO./LGTH.		NO./LGTH.		NO./LGTH.		NO./LGTH.	
F-1	1	40 1/2	1	48	1	54	1	60	1	70	1	82	1	96
H-1A	2	74	2	83	2	94	2	105	2	124	2	146	2	165
H-1B	2	25	2	30	4	34	4	38	4	44	4	52	4	58
L-1	2	57	2	65	2	74	2	82	2	97	2	114	2	128
L-2	2	19	2	19	2	19	2	19	2	19	2	19	2	19
R-1	1	72	1	82	1	92	1	102	1	118	1	138	1	153
W-1A	2	61 1/2	2	67 1/2	2	74	2	79 1/2	2	87 1/2	2	98 1/2	2	107
W-1B	0	N/A	1	41 1/2	2	45	2	48	2	52	2	59 1/2	2	62
W-1C	0	N/A	0	N/A	1	32	1	33 1/2	1	36	1	39	2	40
W-2	4	26	4	29 1/2	4	32	4	34	4	38 1/2	6	44	6	48
TOT. WT.	39 lbs.		46 lbs.		58 lbs.		64 lbs.		73 lbs.		90 lbs.		101 lbs.	

NOTES

1. THIS HEADWALL SHALL BE USED ONLY WHEN PROTECTED BY GUARDRAIL OR INSTALLED OUTSIDE THE CLEAR ZONE.
2. CAST-IN-PLACE HEADWALLS SHALL CONFORM TO SECTION 609 - MINOR STRUCTURES, OF THE CURRENT ITD STANDARD SPECIFICATIONS FOR HIGHWAY CONSTRUCTION.
3. THE METAL REINFORCEMENT SHALL BE NO. 4 BARS. ALL REINFORCEMENT SHALL HAVE A MINIMUM CONCRETE COVER OF 2" AND 3" MINIMUM COVER IF CAST AGAINST EARTH.
4. ALL EDGES TO HAVE 3/4" CHAMFER OR TOOLED EDGES.
5. ALL PIPE CULVERTS WITH A CONCRETE HEADWALL SHALL HAVE THE INLET HEADWALLS BEVELED. USE ENTRANCE LOSS COEFFICIENT K_e= 0.2 FOR BEVELED ENTRANCES.
6. THE METAL FOR THE GRATE SHALL MEET THE REQUIREMENTS OF ASTM A 36. WELDING OF THE METAL GRATE SHALL MEET THE REQUIREMENTS OF THE AMERICAN WELDING SOCIETY D1.1. GRATES FOR INLET HEADWALLS WILL BE REQUIRED ONLY WHEN SHOWN ON THE ROADWAY PLANS. GRATES NEED NOT BE PAINTED OR GALVANIZED.
7. USE CONCRETE, METAL, OR PLASTIC PIPE WITH HEADWALL (CONCRETE PIPE SHOWN ON DRAWING).
8. NOT TO SCALE.

REVISIONS

NO.	DATE	BY	NO.	DATE	BY	NO.	DATE	BY
1	10-69		6	10-01	MSM			
2	3-92	MSM	7	6-03	MSM			
3	12-92	TMR	8	3-05	MSM			
4	5-95	MSM						
5	4-99	MSM						

SCALES SHOWN ARE FOR 11" X 17" PRINTS ONLY

CADD FILE NAME d9__0305.std

DRWG. ORIG. DATE: AUGUST, 1968

IDAHO TRANSPORTATION DEPARTMENT

BOISE IDAHO

ASSISTANT CHIEF ENGINEER (DEVELOPMENT)

CHIEF ENGINEER

STANDARD DRAWING

CONCRETE HEADWALL FOR ARCH PIPE CULVERT

REQUIRES SHEET 1 OF 2

English

STANDARD DRWG. NO.

D-9

SHEET 2 OF 2

PROFESSIONAL ENGINEER * LAND SURVEYOR REGISTERED 2240 3/4/05 STATE OF IDAHO MILFORD MILLER

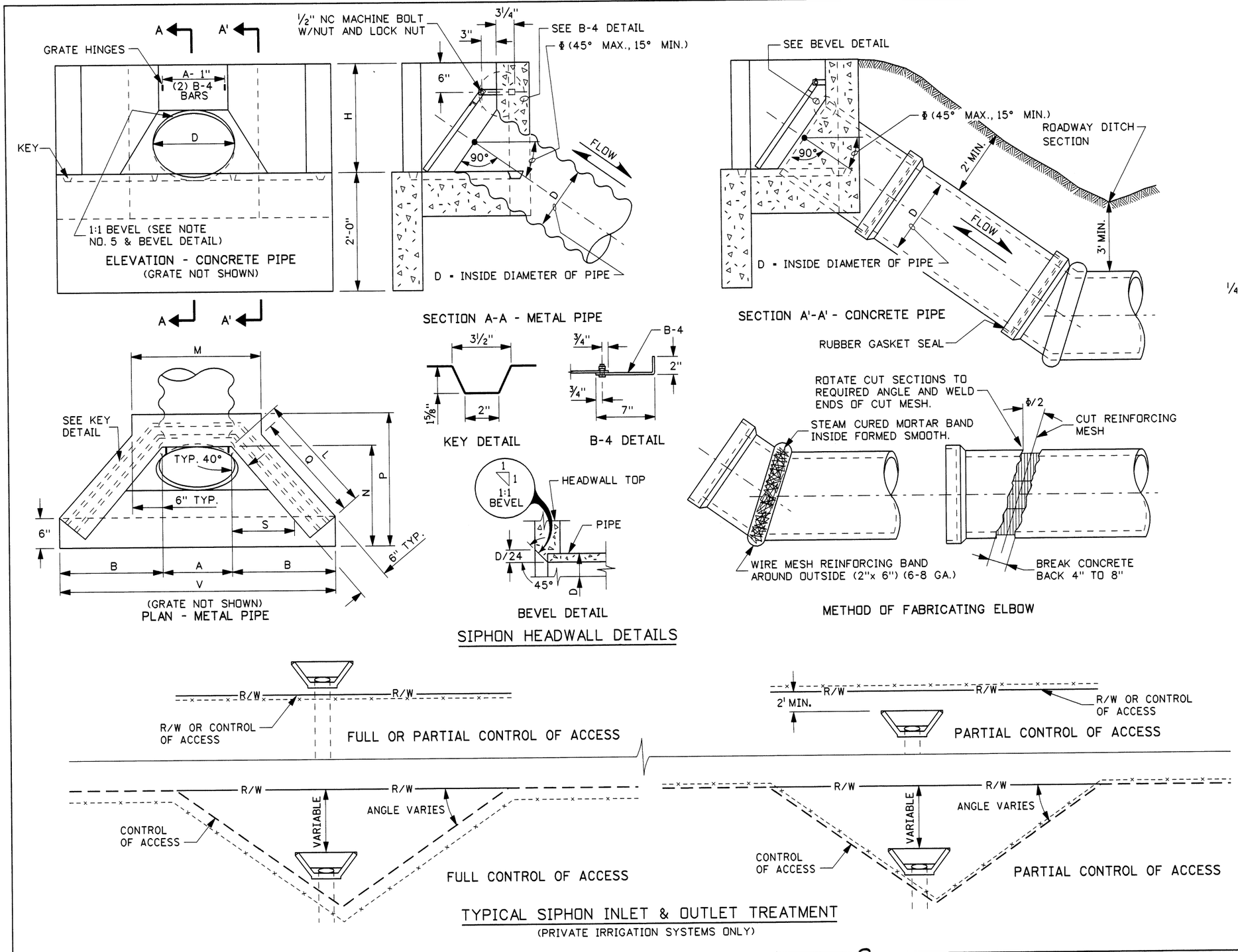

REVISIONS								
NO.	DATE	BY	NO.	DATE	BY	NO.	DATE	BY
1	2-64		6	6-92	MSM			
2	2-68		7	12-92	TMR			
3	9-68		8	6-02	MSM			
4	10-69		9	12-05	MSM			
5	4-90	CR						

SCALES SHOWN ARE FOR 11" X 17" PRINTS ONLY

CADD FILE NAME d10_1205.std

DRWG. ORIG. DATE: AUGUST 1961

IDAHO TRANSPORTATION DEPARTMENT

BOISE IDAHO

ASSISTANT CHIEF ENGINEER (DEVELOPMENT)

CHIEF ENGINEER

STANDARD DRAWING

CONCRETE HEADWALL FOR SIPHONS

REQUIRES SHEET 2 OF 2

English

STANDARD DRWG. NO.

D-10

SHEET 1 OF 2

PROFESSIONAL ENGINEER * LAND SURVEYOR REGISTERED 2240 12/19/05 STATE OF IDAHO MILFORD MILLER

METAL REINFORCEMENT TABLE

MARK	LOCATION	BAR SIZE	(NO.BARS) HDWL. SIZE	SKETCH
F-1	FLOOR	NO. 4	(1) 12"-36" (2) 42"	
L-1	TOP & BOTTOM OF INLET LIP IN FLOOR	NO. 4	(2) 12"-42"	
H-1A	HORIZ. IN TOP OF WING WALL & IN FLOOR BACK WALL	NO. 4	(2) 12"-42"	130°
H-1B	HORIZ. IN WING WALL BETWEEN H-1As' (PAIRS ONLY)	NO. 4	(2) 12"-24" (4) 30"-36" (6) 42"	PIPE 2" 130°
W-1A	EACH SIDE OF PIPE IN BACKWALL, FLOOR, & INLET LIP	NO. 4	(2) 12"-42"	90° 90°
W-1B	IN FLOOR, & INLET LIP	NO. 4	(1) 12"-30" (2) 36"-42"	90°
W-1C	IN FLOOR, & INLET LIP	NO. 4	(2) 21"-42"	90°
L-2	VERTICAL IN FLOOR, & INLET LIP	NO. 4	(2) 12"-42"	
W-2	VERTICAL IN WING WALLS	NO. 4	(4) 12"-30" (6) 36"-42"	

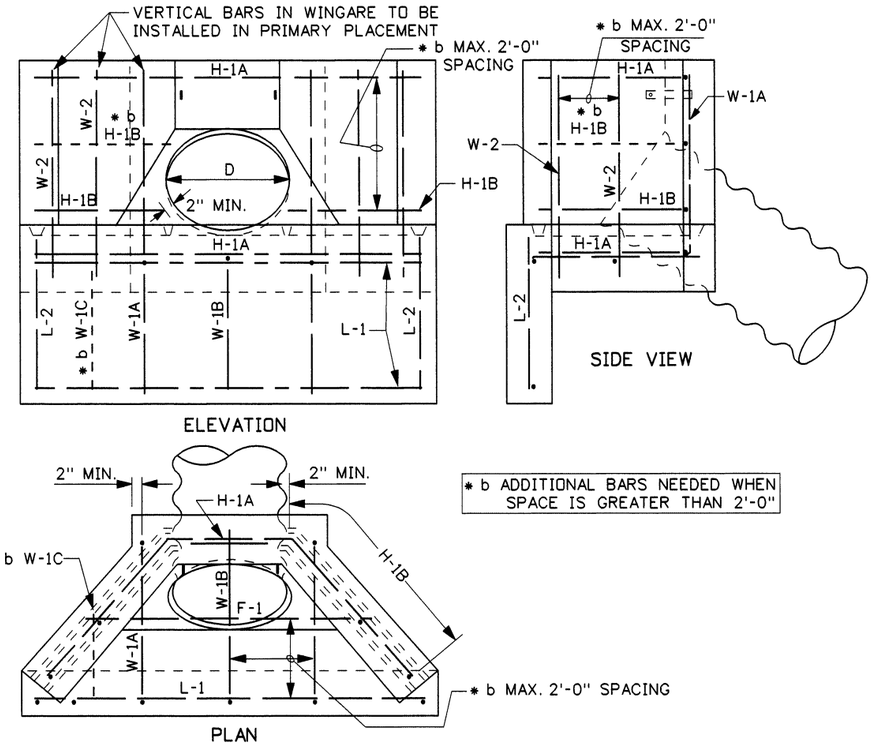

* b ADDITIONAL BARS NEEDED WHEN SPACE IS GREATER THAN 2'-0"

METAL REINFORCEMENT DETAILS

CONCRETE & STEEL QUANTITY TABLE

NOMINAL SIZE DIAMETER (IN.)	CONCRETE (C.Y.)				STEEL (LBS.)
	WINGS & BCKWL.	FLOOR	LIP	TOTAL	
12	0.179	0.148	0.167	0.494	24.6
15	0.240	0.200	0.193	0.633	27.8
18	0.309	0.259	0.220	0.788	31.0
21	0.386	0.326	0.247	0.959	35.8
24	0.472	0.400	0.274	1.146	39.4
30	0.671	0.572	0.327	1.570	46.1
36	0.905	0.774	0.381	2.061	57.6
42	1.176	1.007	0.435	2.618	73.6

HEADWALL DIMENSION TABLE

CULVERT SIZE DIAMETER (IN.)	IN INCHES										
	D/24	A	B	H	L	M	N	P	Q	S	V
12	1/2	13	20 7/16	21	24 5/8	25	21	27 1/2	22 7/16	12 9/16	53 13/16
15	5/8	16 1/4	23 1/8	24 1/4	28 7/8	28 1/4	24 1/4	30 7/8	26 11/16	15 5/16	62 9/16
18	3/4	19 1/2	25 7/8	27 1/2	33 1/8	31 1/2	27 1/2	34 1/4	30 15/16	18 1/16	71 1/4
21	7/8	22 3/4	28 5/8	30 3/4	37 5/16	34 3/4	30 3/4	37 5/8	35 3/16	20 3/4	79 15/16
24	1	26	31 5/16	34	41 9/16	38	34	41	39 3/8	23 1/2	88 5/8
30	1 1/4	32 1/2	36 3/4	40 1/2	50 1/16	44 1/2	40 1/2	47 3/4	47 7/8	28 15/16	106 1/16
36	1 1/2	39	42 1/4	47	58 9/16	51	47	54 1/2	56 3/8	34 3/8	123 1/2
42	1 3/4	45 1/2	47 11/16	53 1/2	67 1/16	57 1/2	53 1/2	61 1/4	64 7/8	39 5/8	140 7/8

GRATE DIMENSION & MATERIALS TABLE

CULVERT SIZE DIAMETER (IN.)	IN INCHES							
	DIMENSIONS				BAR SIZES			
	A'	* c X	Y	Z	B-1	B-2	B-3	B-4
12	11	19 3/16	28 1/2	18 7/8	1x1/4	1 1/4x1/4	1 1/4x1 1/4x1/4	1x1/4x9
15	14	23 3/4	36 7/8	24 3/16	1x1/4	1 1/4x1/4	1 1/4x1 1/4x1/4	1x1/4x9
18	17	28 3/8	45 5/16	29 1/2	1x1/4	1 1/4x1/4	1 1/4x1 1/4x1/4	1x1/4x9
21	20	32 15/16	53 3/4	34 13/16	1x1/4	1 1/4x1/4	1 1/4x1 1/4x1/4	1x1/4x9
24	23	37 9/16	62 3/16	40 1/8	1x1/4	1 1/4x1/4	1 1/4x1 1/4x1/4	1x1/4x9
30	29	46 3/4	79 1/16	50 13/16	1 1/4x1/4	1 1/2x1/4	1 1/2x1 1/2x1/4	1 1/2x1/4x9
36	35	55 7/8	92 15/16	61 1/2	1 1/2x1/4	1 3/4x1/4	1 3/4x1 3/4x1/4	1 3/4x1/4x9
42	41	65 1/16	112 3/16	72 3/16	1 3/4x1/4	2 1/4x3/8	2 1/4x2 1/2x3/8	2 1/4x3/8x9

* c ALLOW 3/4"-1" EXTRA BAR LENGTH FOR HOLE FABRICATION

NOTES

1. THE SIPHON HEADWALL SHALL BE USED ONLY WHEN PROTECTED BY GUARDRAIL OR INSTALLED OUTSIDE THE CLEAR ZONE.
2. ALL CAST-IN-PLACE HEADWALLS SHALL CONFORM TO SECTION 609 - MINOR STRUCTURES, OF THE CURRENT ITD STANDARD SPECIFICATIONS FOR HIGHWAY CONSTRUCTION.
3. THE METAL REINFORCEMENT SHALL BE NO. 4 BARS. ALL REINFORCEMENT SHALL HAVE A MINIMUM CONCRETE COVER OF 2" OR 3" MINIMUM COVER IF CAST AGAINST EARTH.
4. ALL EDGES TO HAVE 3/4" CHAMFER OR TOOLED EDGES.
5. ALL PIPE INLETS/OUTLETS WITH A CONCRETE SIPHON HEADWALL SHALL HAVE THE INLET HEADWALLS BEVELED. USE ENTRANCE LOSS COEFFICIENT K_e = 0.2 FOR BEVELED ENTRANCES.
6. THE METAL FOR THE GRATE SHALL MEET THE REQUIREMENTS OF ASTM A 36. WELDING OF THE METAL GRATE SHALL MEET THE REQUIREMENTS OF THE AMERICAN WELDING SOCIETY D1.1. GRATES FOR INLET HEADWALLS WILL BE REQUIRED ONLY WHEN SHOWN ON THE ROADWAY PLANS. GRATES NEED NOT BEPAINTED OR GALVANIZED.
7. THE USE OF CONCRETE, CORRUGATED METAL, OR CORRUGATED POLYETHYLENE PIPE WITH A SIPHON HEADWALL IS ALLOWED (CONCRETE PIPE SHOWN ON DRAWING).
8. A SIPHON SYSTEM REQUIRES A GRATE ON THE BOTH INLET AND OUTLET HEADWALL.
9. NOT TO SCALE.

PROFESSIONAL ENGINEER * LAND SURVEYOR
REGISTERED
2240
12/19/05
STATE OF IDAHO
MILFORD MILLER

REVISIONS

NO.	DATE	BY	NO.	DATE	BY	NO.	DATE	BY
1	2-64		6	6-92	MSM			
2	2-68		7	12-92	TMR			
3	9-68		8	6-02	MSM			
4	10-69		9	12-05	MSM			
5	4-90	GB						

SCALES SHOWN ARE FOR 11" X 17" PRINTS ONLY

CADD FILE NAME d10_1205.std

DRWG. ORIG. DATE: AUGUST, 1961

IDAHO TRANSPORTATION DEPARTMENT

BOISE IDAHO

ASSISTANT CHIEF ENGINEER (DEVELOPMENT)

CHIEF ENGINEER

STANDARD DRAWING

CONCRETE HEADWALL FOR SIPHONS

REQUIRES SHEET 1 OF 2

English

STANDARD DRWG. NO.

D-10

SHEET 2 OF 2

STRUCTURE EXCAVATION & COMPACTING BACKFILL QUANTITIES
STRUCTURE EXCAVATION:
PAY QUANTITIES WILL BE BASED ON THE ACTUAL VOLUME REMOVED WITHIN THE LIMITS OF "E" & "G" & THE LENGTH OF THE EXCAVATION.
COMPACTING BACKFILL:
PAY QUANTITIES WILL BE BASED ON THE STRUCTURE EXCAVATION PLUS THE VOLUME COMPUTED FROM "F" & "H", LESS THE VOLUME OF THE PIPE.
PIPE VOLUME:
THE VOLUME OF THE PIPE WILL BE BASED ON THE INSIDE DIMENSIONS OF THE PIPE REGARDLESS OF THE KIND OF PIPE USED (SEE SECTION 210 - STRUCTURE EXCAVATION & COMPACTING BACKFILL, FROM THE ITD STANDARD SPECIFICATIONS FOR HIGHWAY CONSTRUCTION).

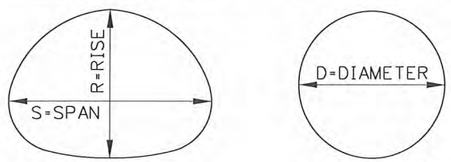

ARCH PIPE ROUND PIPE

DIMENSION DETAIL

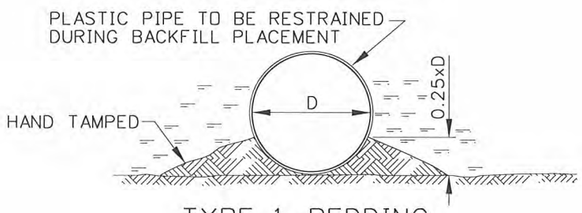

TYPE 1 BEDDING

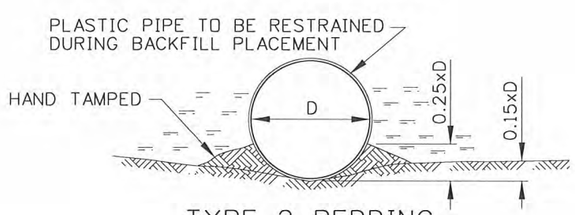

TYPE 2 BEDDING

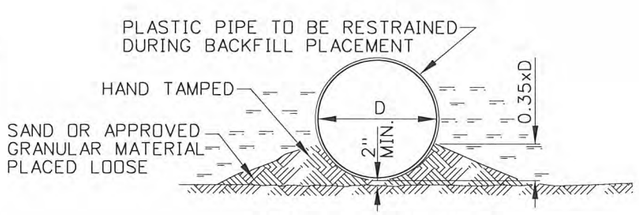

TYPE 3 BEDDING

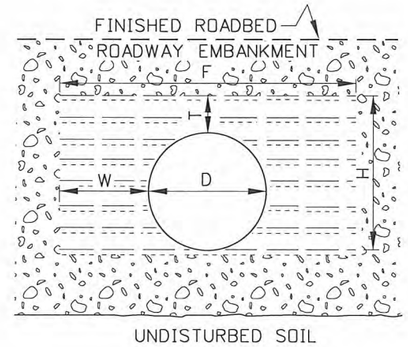

ABOVE UNDISTURBED SOIL

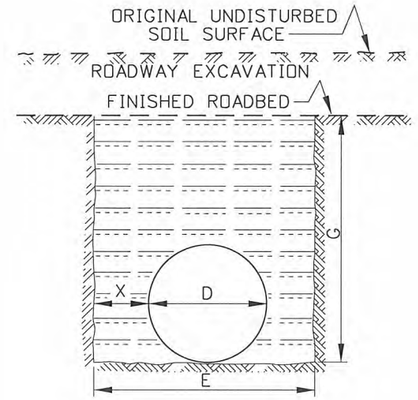

BELOW UNDISTURBED SOIL

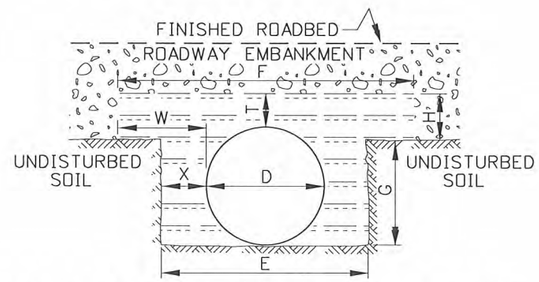

ABOVE & BELOW UNDISTURBED SOIL

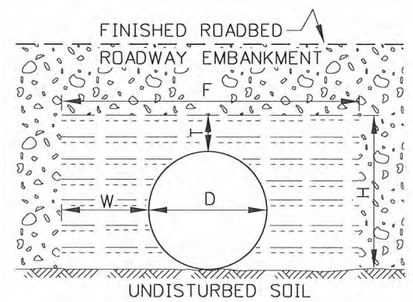

ON UNDISTURBED SOIL

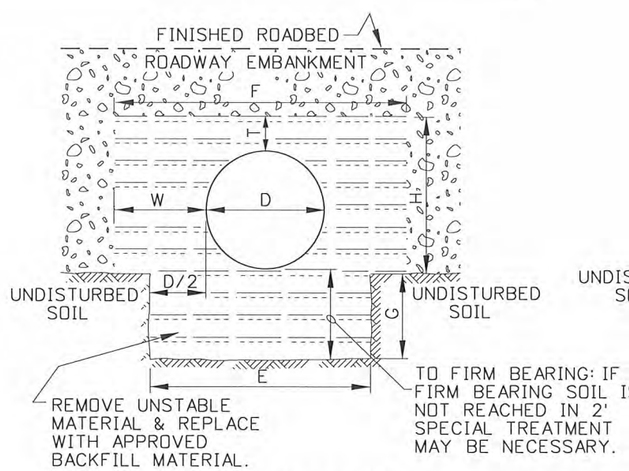

UNSTABLE MATERIAL

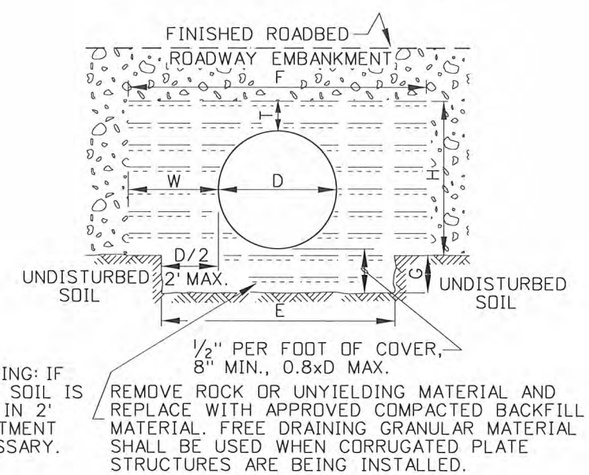

UNYIELDING MATERIAL

CONDUIT INSTALLATION NOMENCLATURE	
ROUND PIPE	
SYMBOL	DESCRIPTION
D	INSIDE DIAMETER OF PIPE.
D/2	ONE-HALF INSIDE DIAMETER OF PIPE.
E	WIDTH OF COMPACTING BACKFILL IN UNDISTURBED SOIL
F	WIDTH OF COMPACTING BACKFILL IN FILL EMBANKMENT
G	HEIGHT OF COMPACTING BACKFILL IN UNDISTURBED SOIL
H	HEIGHT OF COMPACTING BACKFILL IN FILL EMBANKMENT
T	1' FOR CORRUGATED METAL PIPE, CONCRETE PIPE, & PLASTIC PIPE. 2'-0" FOR CORRUGATED PLATE PIPE (NOTE: T DETERMINES THE LIMITS OF H).
W	INSIDE DIAMETER OF PIPE BUT NOT OVER 4'-0".
X	EQUAL TO 2'-0" MAX. WHEN D LESS THAN AND EQUAL TO 4'-0", OR EQUAL TO D/2 MAX. WHEN D GREATER THAN 4'-0", OR AS SPECIFIED.
* ARCH PIPE	
S	SPAN (HORIZ. INSIDE WIDTH OF PIPE)
R	RISE (VERT. INSIDE WIDTH OF PIPE)
S & S/2	S EQUAL TO D, BUT SHALL READ SPAN & D/2 SHALL READ SPAN/2
X	EQUAL TO 2'-0" MAX. WHEN SPAN LESS THAN AND EQUAL TO 4'-0", OR EQUAL TO SPAN/2 MAX. WHEN SPAN GREATER THAN 4'-0", OR AS SPECIFIED.

* SEE NOTE NO. 8 & DIMENSION DETAIL

NOTES

1. NORMALLY, PIPE SHALL BE CAMBERED FROM A CHORD THROUGH THE INLET AND OUTLET INVERTS AN ORDINATE AMOUNT EQUALTO 1% OF THE PIPE LENGTH. CAMBER SHALL BE DEVELOPED ON PARABOLIC CURVE.
2. IF THE ELEVATION OF ANY POINT ON THE PARABOLIC CURVE, AS DESIGNED, IS MORE THAN 6" HIGHER THAN THE ELEVATION OF THE INLET INVERT, THE CAMBER MUST BE REDUCED OR THE PIPE GRADE INCREASED.
3. THE GRADE BETWEEN THE INLET AND OUTLET INVERTS SHALL NOT BE FLATTER THAN 1% EXCEPT IN CASES WHERE THE NATURAL DRAINAGE GRADE IS LESS THAN 1%.
4. METAL PIPE MAY BE ROUND UNLESS ELONGATION (5%) IS REQUIRED ON THE PIPE SUMMARY SHEET. STRUCTURAL PLATE PIPE SHALL BE FABRICATED 5% OUT OF ROUND.
5. TYPE 1 BEDDING SHALL BE USED FOR ROUND PIPE EXCEPT WHEN TYPE 2 OR 3 BEDDING IS REQUIRED ON THE PIPE SUMMARY SHEET.
6. NORMALLY, THE MINIMUM DISTANCE BETWEEN MULTIPLE PIPES IS D/2 OR S/2, BUT NOT LESS THAN 1' BETWEEN THE PIPES OUTER WALLS (NOTE: MIN. BETWEEN PIPES MAY NEED TO BE GREATER FOR MECHANICAL TAMPING).
7. THE BED FOR ARCH TYPE PIPE SHALL BE SHAPED TO FIT THE BOTTOM OF THE PIPE.
8. DIMENSIONS FOR ARCH PIPE SHALL BE THE SAME AS FOR ROUND PIPE, EXCEPT AS NOTED IN THE "CONDUIT INSTALLATION NOMENCLATURE" TABLE.
9. NOT TO SCALE.

REVISIONS

NO.	DATE	BY	NO.	DATE	BY	NO.	DATE	BY
1	12-68		6	11-83		11	12-04	MSM
2	3-69		7	7-89	GB	12	9-10	PLR
3	9-70		8	6-92	MSM			
4	2-72		9	2-00	MSM			
5	11-78		10	11-01	MSM			

SCALES SHOWN ARE FOR 11" X 17" PRINTS ONLY

CADD FILE NAME: d12_1010.std

DRAWING DATE: JULY, 1968

IDAHO TRANSPORTATION DEPARTMENT

BOISE IDAHO

ASSISTANT CHIEF ENGINEER (DEVELOPMENT)

CHIEF ENGINEER

STANDARD DRAWING

CONDUIT INSTALLATION FOR NEW ROADWAYS & APPROACHES

English

STANDARD DRAWING NO. D-12

SHEET 1 OF 1

PROFESSIONAL ENGINEER REGISTERED 6506 10/26/2010 STATE OF IDAHO TED E. MASON

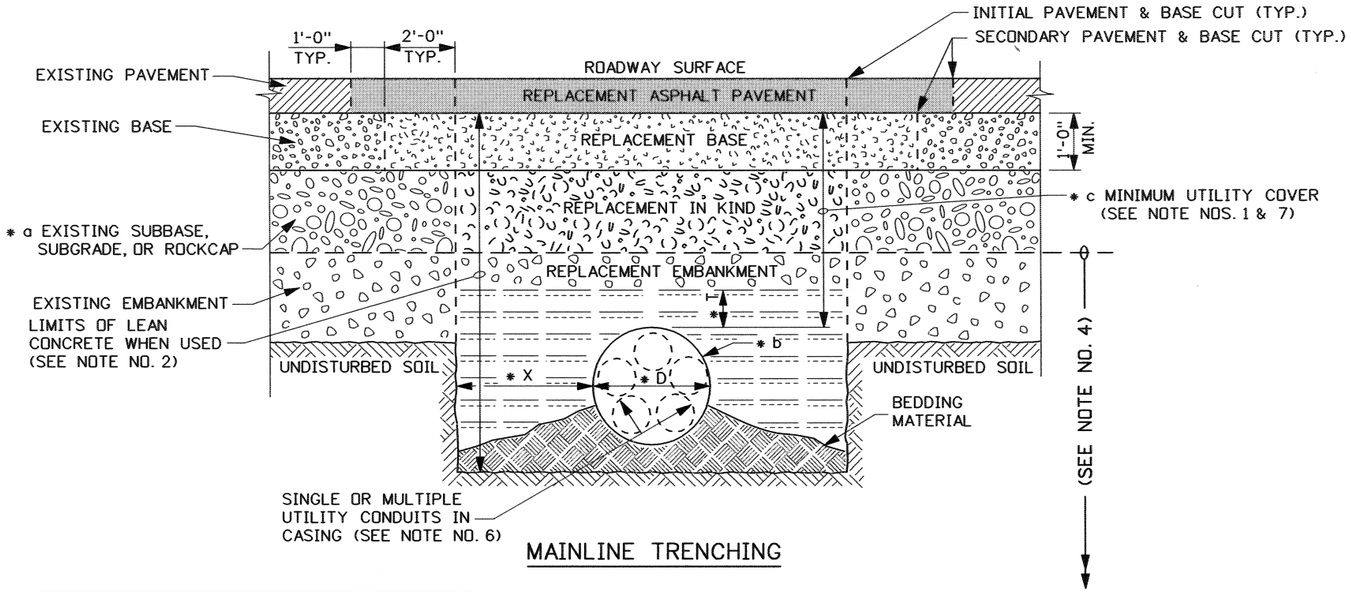

MAINLINE TRENCHING

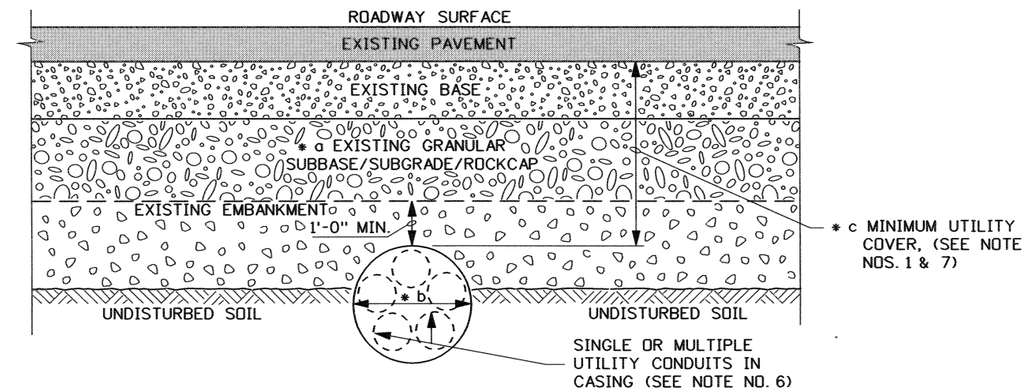

JACKING, DRIVING, OR BORING

ASPHALT PAVEMENT SURFACE:
REQUIRED ON ALL RURAL PRIVATE & COMMERCIAL APPROACHES. PAVED TO A MINIMUM DEPTH OF 3". ALL PUBLIC APPROACH PAVING & BALLAST DEPTHS SHALL MEET LOCAL HIGHWAY DISTRICT OR CITY REQUIREMENTS (SEE NOTE NO. 5).

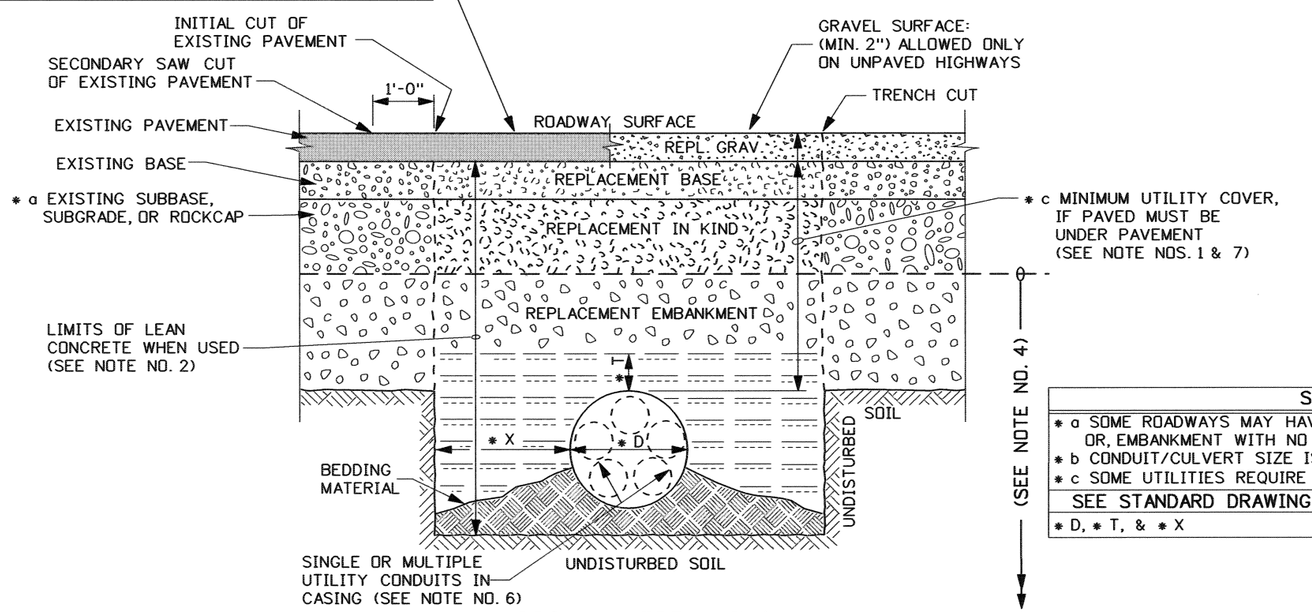

APPROACH TRENCHING

SUB-NOTES
* a SOME ROADWAYS MAY HAVE A GRANULAR SUBBASE, OR ROCKCAP OR, EMBANKMENT WITH NO SUBBASE. (SEE NOTE NOS. 2 & 3).
* b CONDUIT/CULVERT SIZE IS MIN. 1'-0" (SEE NOTE NO. 1).
* c SOME UTILITIES REQUIRE GREATER DEPTH. (SEE NOTE NOS. 1 & 7).
SEE STANDARD DRAWING D-12 FOR DEFINITIONS OF:
* D, * T, & * X

NOTES

1. THE DESCRIPTION OF CONDUIT SHALL INCLUDE CULVERTS, PIPES, AND CASINGS USED FOR THE PURPOSE OF CONVEYING WATER, PETROLEUM PRODUCTS, AND UNDERGROUND UTILITIES. THE METHOD OF INSTALLATION (JACKING, DRIVING, OR BORING AND TRENCHING) SHALL MEET THE REQUIREMENTS OF THE "UTILITIES ACCOMMODATIONS", APPENDIX B, OF THE ITD DESIGN MANUAL AND THE REQUIREMENTS OF, STATE, COUNTY OR OTHER LOCAL AUTHORITY.
2. THE USE OF LEAN CONCRETE AS BACKFILL MATERIAL IN OPEN TRENCH CROSSINGS ON ROADWAYS AND APPROACHES MAY BE REQUIRED BY THE PERMITTING ENTITY. LEAN CONCRETE FOR THE REPLACEMENT OF BASE, SUBBASE, AND EMBANKMENT SHALL REQUIRE AN APPROVED MIX DESIGN.
3. WHEN REPLACEMENT MATERIAL FOR THE BASE, SUBBASE, AND/OR EMBANKMENT IS NOT LEAN CONCRETE, THEN THE REPLACEMENT MATERIALS AND COMPACTION OF THE BASE COURSE(S) SHALL BE IN ACCORDANCE WITH SECTION 303 - AGGREGATE BASE AND THE SUBBASE SHALL BE IN ACCORDANCE WITH SECTION 301 - GRANULAR SUBBASE OF THE ITD STANDARD SPECIFICATIONS FOR HIGHWAY CONSTRUCTION (NOTE: WHEN A ROCKCAP IS ENCOUNTERED THE REPLACEMENT MATERIAL SHALL BE IN KIND OR AS DIRECTED BY THE ENGINEER).
4. ALL CONDUIT PLACEMENT BY OPEN TRENCHING SHALL MEET THE REQUIREMENTS OF STANDARD DRAWING D-12 - CONDUIT INSTALLATION AND SECTION 210 - STRUCTURE EXCAVATION AND COMPACTING BACKFILL OF THE ITD STANDARD SPECIFICATIONS FOR HIGHWAY CONSTRUCTION.
5. WHEN THE PAVEMENT IS DISTURBED ON ROADWAYS AND/OR RURAL PRIVATE, COMMERCIAL, AND PUBLIC APPROACHES BY JACKING, DRIVING, BORING OR TRENCHING THE PAVEMENT SHALL BE RESTORED TO THE ORIGINAL DEPTH AND SMOOTHNESS.
6. UTILITY CONDUITS SHALL CONTAIN ADDITIONAL CARRIERS WHENEVER FEASIBLE TO ALLOW ACCESS FOR FUTURE USE. WHEN MULTIPLE CARRIERS ARE PLACED IN TRENCH WITHOUT CASING, THE CARRIERS SHALL BE SEPARATED BY 3" OF SAND OR SOIL CUSHION.
7. THE MINIMUM DEPTH COVER FOR CULVERTS CONVEYING WATER IS 2'-0". PIPELINES CARRYING LIQUID OR GAS PETROLEUM SHALL HAVE A MINIMUM DEPTH COVER AT ANY POINT UNDER THE ROADWAY PRISM OF 4'-0". UTILITIES FOR COMMUNICATION SHALL CONFORM TO THE 2'-0" MINIMUM DEPTH COVER (NOTE: MINIMUM DEPTH IS FROM UNDER PAVEMENT).
8. NOT TO SCALE.

REVISIONS								
NO.	DATE	BY	NO.	DATE	BY	NO.	DATE	BY
1	11-01	MSM						
2	1-05	MSM						

SCALES SHOWN ARE FOR 11" X 17" PRINTS ONLY

CADD FILE NAME d13_0105.std

DRWG. ORIG. DATE: FEBRUARY, 2000

IDAHO TRANSPORTATION DEPARTMENT

BOISE IDAHO

R E Thomas
ASSISTANT CHIEF ENGINEER (DEVELOPMENT)

Steven C. Hutchinson
CHIEF ENGINEER

STANDARD DRAWING

CONDUIT INSTALLATION FOR EXISTING ROADWAYS & APPROACHES

REQUIRES STD. DWG. D-12

English

STANDARD DRWG. NO.

D-13

SHEET 1 OF 1

PROFESSIONAL ENGINEER REGISTERED 2240 1/5/05 STATE OF IDAHO MILFORD L. MILLER

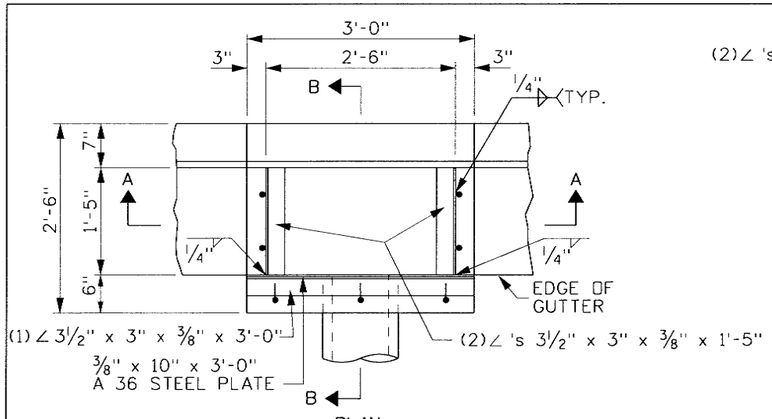

PLAN

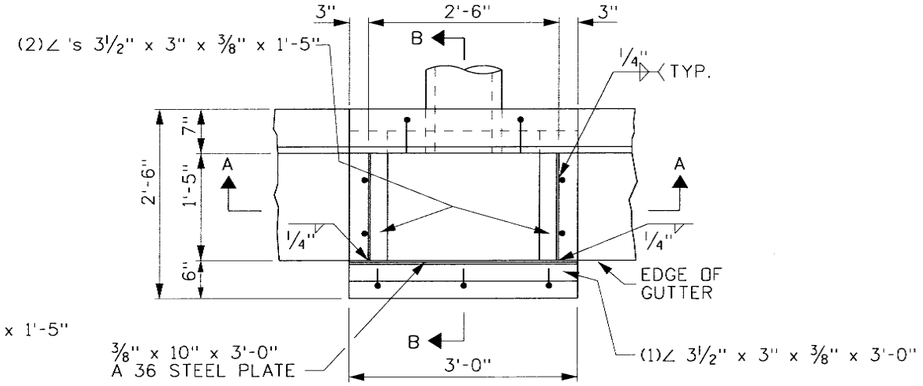

PLAN

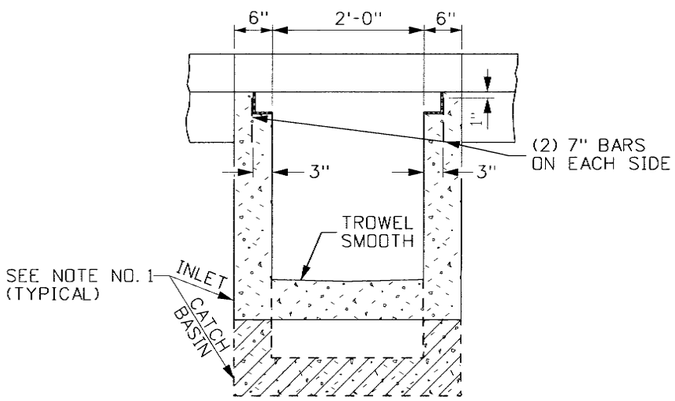

SECTION A-A

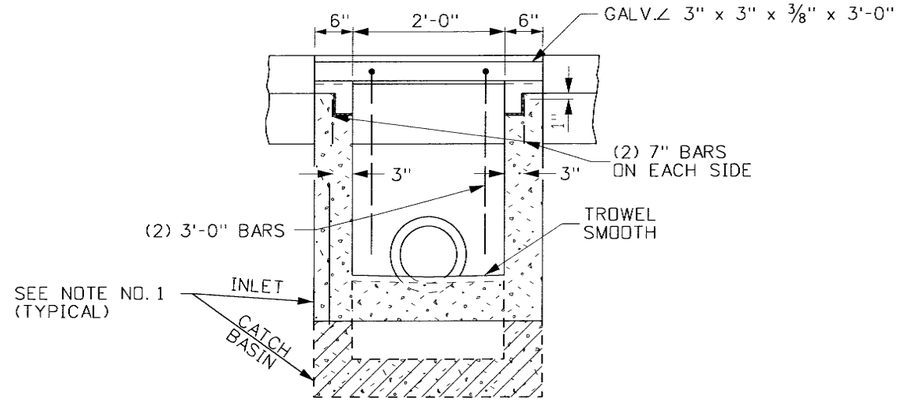

SECTION A-A

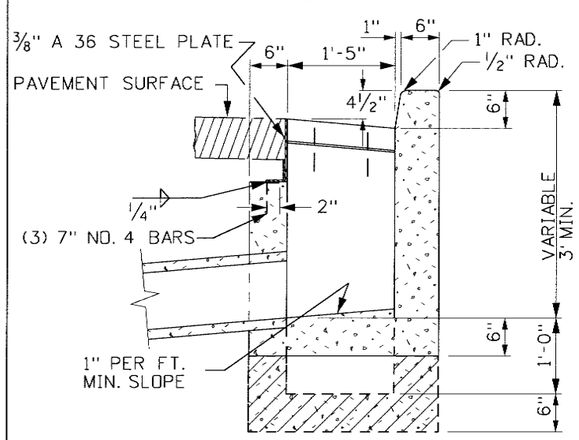

SECTION B-B

INLET - TYPE 1

CATCH BASIN - TYPE 1

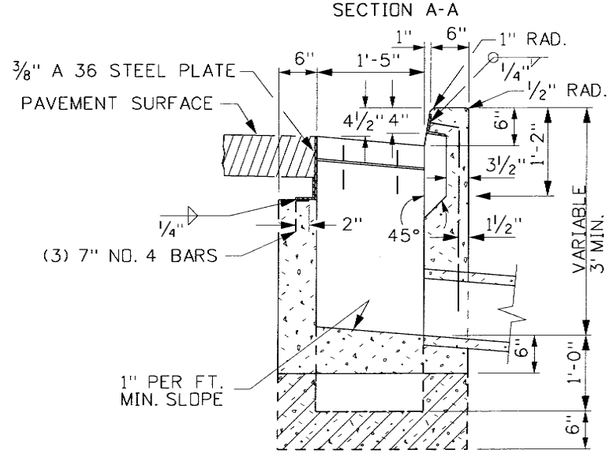

SECTION B-B

INLET - TYPE 2

CATCH BASIN - TYPE 2

NOTES

1. PATTERNS USED IN DRAWING:

   INLET SECTIONS:

   CATCH BASIN BOTTOMS:

   PAVEMENT:

2. INLETS AND CATCH BASINS MAY BE EITHER PRECAST OR CAST-IN-PLACE. PRECAST UNITS SHALL MEET THE REQUIREMENTS OF ASTM C 913. (PRIOR APPROVAL OF SHOP DRAWINGS WILL BE REQUIRED ON MODIFIED UNITS.)
3. A 1" SIDE DRAFT IS ALLOWED FOR FORM REMOVAL.
4. CAST-IN-PLACE INLETS AND CATCH BASINS SHALL CONFORM TO SECTION 609 - MINOR STRUCTURES OF THE CURRENT ITD STANDARD SPECIFICATIONS FOR HIGHWAY CONSTRUCTION.
5. THE GRADE LINE OF THE TOP INSIDE OF ANY PIPE SHALL ENTER AT A POINT NO LOWER THAN THE TOP INSIDE OF THE OUTLET PIPE.
6. PIPES CAN ENTER OR LEAVE THE BOX IN ANY DIRECTION. ALL CONNECTIONS AND BROKEN AREAS SHALL BE GROUTED SMOOTH.
7. STEEL ANGLES SHALL BE SET SO THAT EACH BEARING BAR OF PREFABRICATED GRATE SHALL HAVE FULL BEARING ON BOTH ENDS. THE FINISHED TOP OF CONCRETE SHALL BE EVEN WITH THE ANGLE/GRATE SURFACE. THE STRUCTURAL STEEL NEED NOT BE PAINTED BUT SHALL MEET THE REQUIREMENTS OF ASTM A 36.
8. ALL METAL REINFORCEMENT USED SHALL BE NO. 4 BARS. THE METAL REINFORCEMENT SHALL BE SMOOTH CUT TO ACCOMMODATE PIPES.
9. GRAY IRON CAST TO THE DIMENSIONS GIVEN FOR THE STEEL GRATES MAY BE USED. THE CASTINGS SHALL CONFORM TO AASHTO M306 CLASS 35B GRAY IRON CASTINGS.
10. INLET/CATCH BASIN GRATES MAY EITHER BE RESISTANCE WELDED OR ARC WELDED. IN EITHER CASE THE GRATE SHALL BE TRUE AND FLUSH.
11. GRATE B WILL BE USED ONLY WHEN SPECIFIED.
12. NOT TO SCALE.

REVISIONS

NO.	DATE	BY	NO.	DATE	BY	NO.	DATE	BY
1	10-80		6	9-94	MSM	11	11-08	JRV
2	4-82		7	6-97	MSM			
3	3-84		8	6-01	MSM			
4	1-89	GB	9	11-04	MSM			
5	12-93	MSM	10	5-07	MSM			

SCALES SHOWN ARE FOR 11" X 17" PRINTS ONLY

CADD FILE NAME: e6a_1108.std

DRAWING DATE: JULY, 1961

IDAHO TRANSPORTATION DEPARTMENT

BOISE, IDAHO

ASSISTANT CHIEF ENGINEER (DEVELOPMENT)

CHIEF ENGINEER

STANDARD DRAWING

INLETS & CATCH BASINS TYPES 1, 2, & 3

English

STANDARD DRAWING NO. E-6-A

SHEET 1 OF 2

PROFESSIONAL ENGINEER REGISTERED 6506 STATE OF IDAHO TED E. MASON 11/03/08

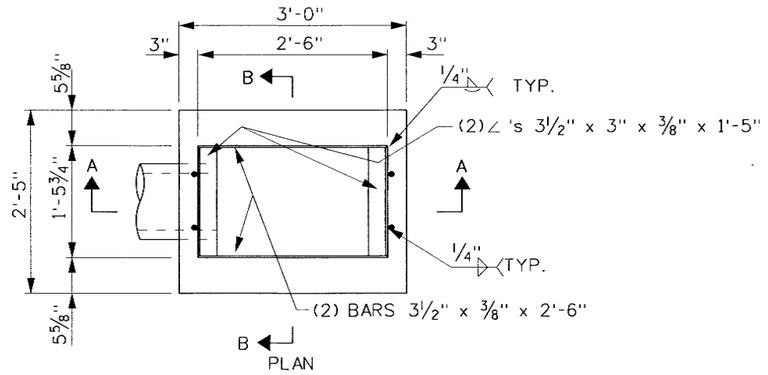

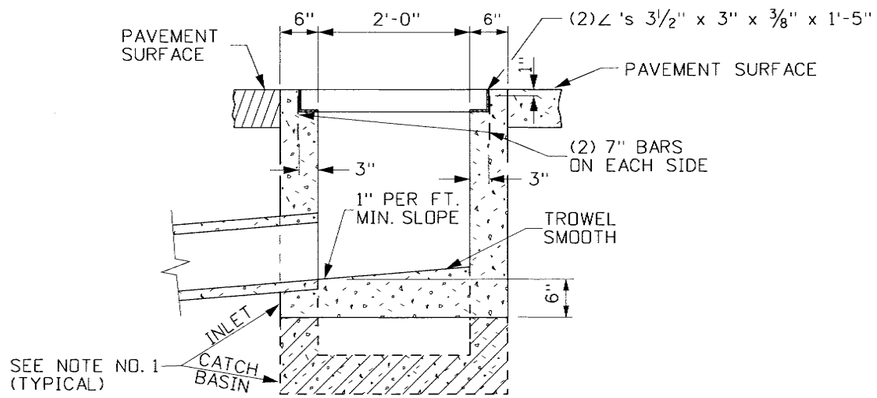

SECTION A-A

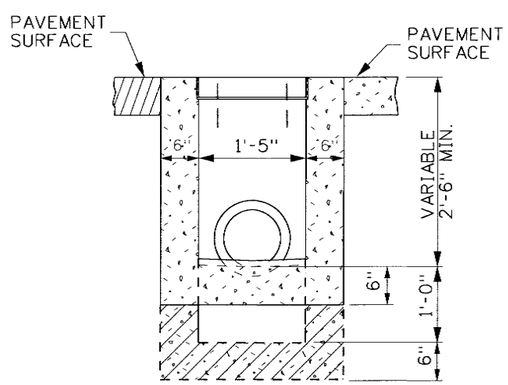

SECTION B-B

INLET - TYPE 3

CATCH BASIN - TYPE 3

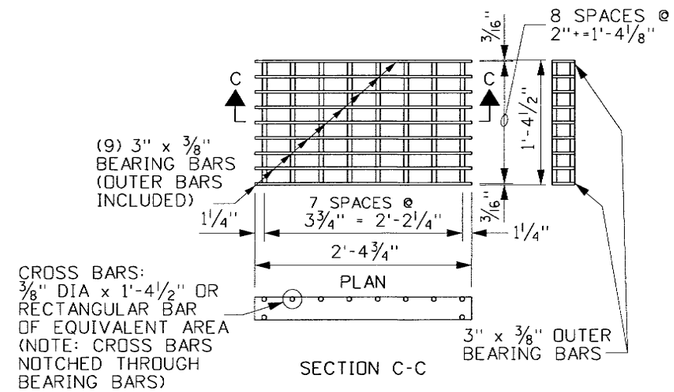

SECTION C-C

GRATE A (STEEL)

(WEIGHT: APPROXIMATELY 88 LBS., SEE NOTE 9 & 10)

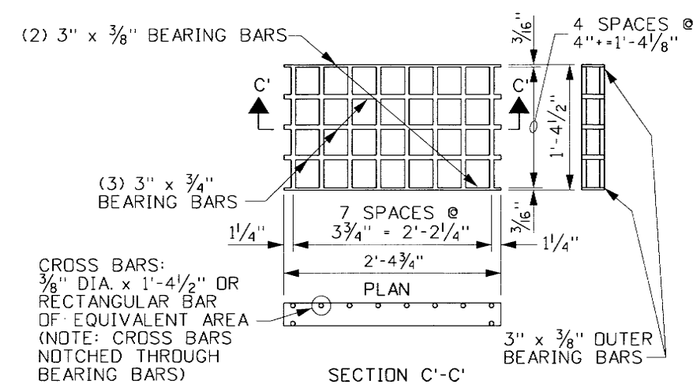

SECTION C'-C'

GRATE B (STEEL)

(WEIGHT: APPROXIMATELY 79 LBS., SEE NOTE 9 & 10)

REVISIONS								
NO.	DATE	BY	NO.	DATE	BY	NO.	DATE	BY
1	10-80		6	9-94	MSM	11	11-08	JRV
2	4-82		7	6-97	MSM			
3	3-84		8	6-01	MSM			
4	1-89	GB	9	11-04	MSM			
5	12-93	MSM	10	8-08	JRV			

SCALES SHOWN ARE FOR 11" X 17" PRINTS ONLY

CADD FILE NAME:

DRAWING DATE: JULY, 1961

IDAHO TRANSPORTATION DEPARTMENT

BOISE, IDAHO

ASSISTANT CHIEF ENGINEER (DEVELOPMENT)

CHIEF ENGINEER

STANDARD DRAWING

INLETS & CATCH BASINS TYPES 1, 2, & 3

English

STANDARD DRAWING NO. E-6-A

SHEET 2 OF 2

PROFESSIONAL ENGINEER REGISTERED 6506 STATE OF IDAHO TED E. MASON 11/03/08

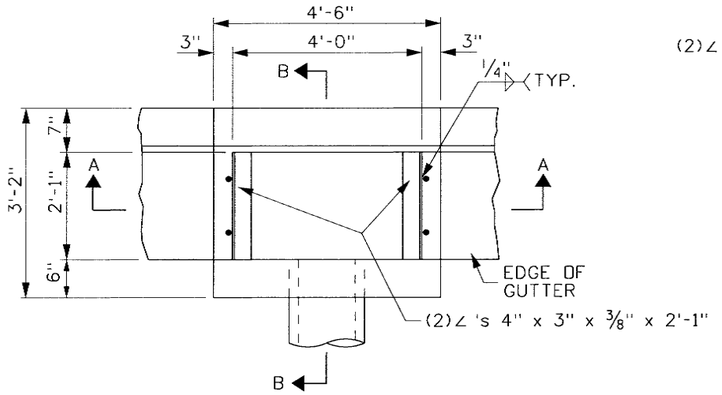

PLAN

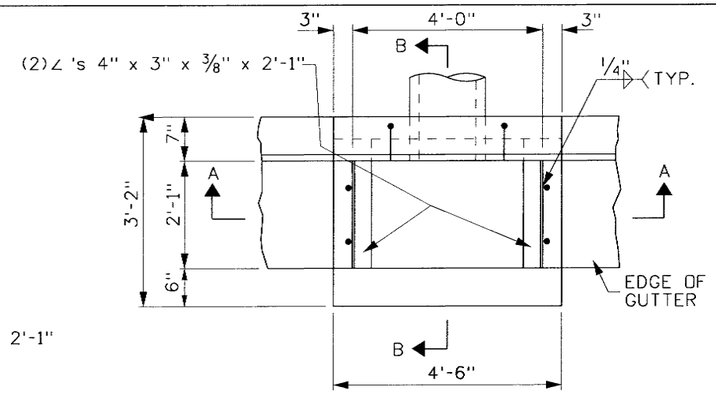

PLAN

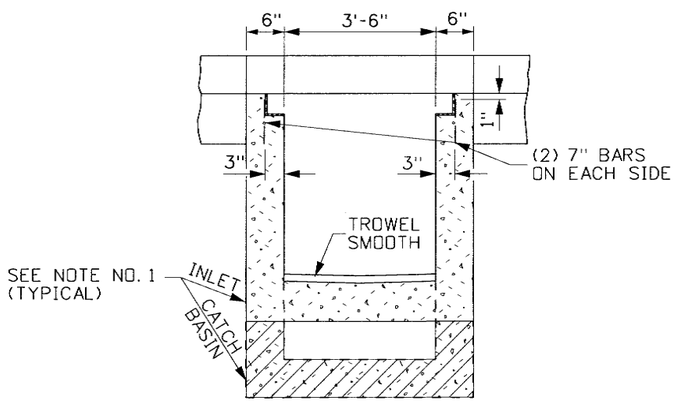

SECTION A-A

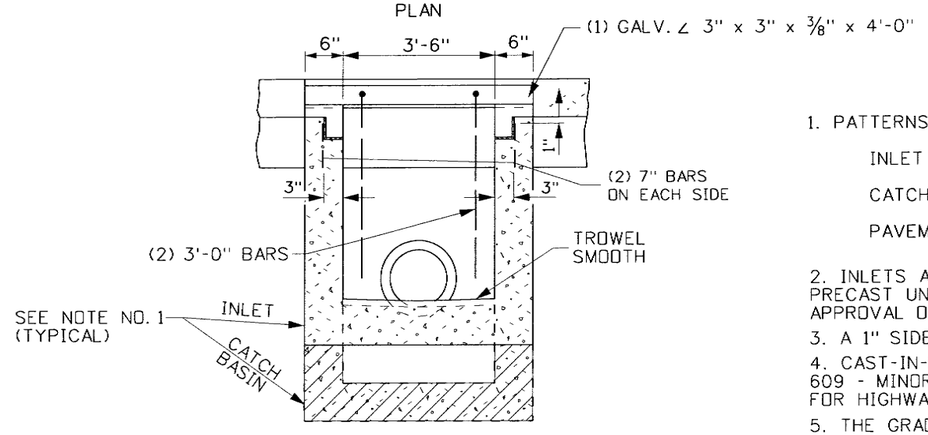

SECTION A-A

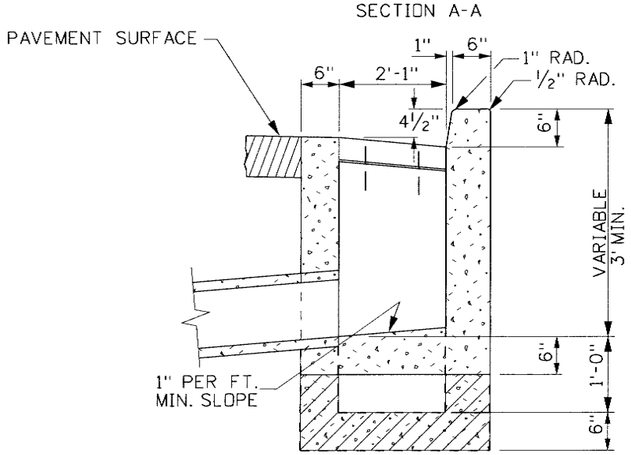

SECTION B-B

INLET - TYPE 1A

CATCH BASIN - TYPE 1A

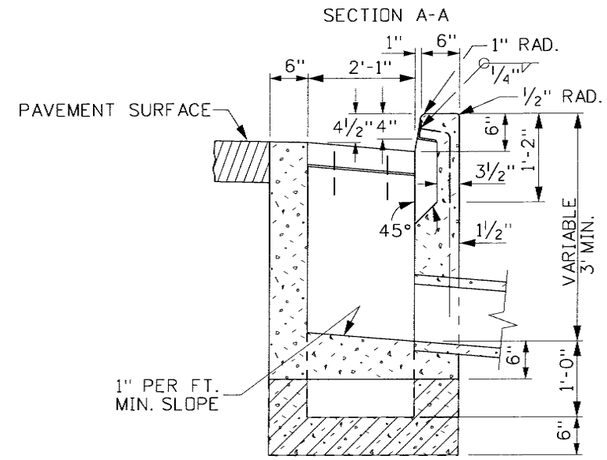

SECTION B-B

INLET - TYPE 2A

CATCH BASIN - TYPE 2A

NOTES

1. PATTERNS USED IN DRAWING:

   INLET SECTIONS:

   CATCH BASIN BOTTOMS:

   PAVEMENT:

2. INLETS AND CATCH BASINS MAY BE EITHER PRECAST OR CAST-IN-PLACE. PRECAST UNITS SHALL MEET THE REQUIREMENTS OF ASTM C 913. (PRIOR APPROVAL OF SHOP DRAWINGS WILL BE REQUIRED ON MODIFIED UNITS.)
3. A 1" SIDE DRAFT IS ALLOWED FOR FORM REMOVAL.
4. CAST-IN-PLACE INLETS AND CATCH BASINS SHALL CONFORM TO SECTION 609 - MINOR STRUCTURES OF THE CURRENT ITD STANDARD SPECIFICATIONS FOR HIGHWAY CONSTRUCTION.
5. THE GRADE LINE OF THE TOP INSIDE OF ANY PIPE SHALL ENTER AT A POINT NO LOWER THAN THE TOP INSIDE OF THE OUTLET PIPE.
6. PIPES CAN ENTER OR LEAVE THE BOX IN ANY DIRECTION. ALL CONNECTIONS AND BROKEN AREAS SHALL BE GROUTED SMOOTH.
7. STEEL ANGLES SHALL BE SET SO THAT EACH BEARING BAR OF PREFABRICATED GRATE SHALL HAVE FULL BEARING ON BOTH ENDS. THE FINISHED TOP OF CONCRETE SHALL BE EVEN WITH THE ANGLE/GRATE SURFACE. THE STRUCTURAL STEEL NEED NOT BE PAINTED BUT SHALL MEET THE REQUIREMENTS OF ASTM A 36.
8. ALL METAL REINFORCEMENT USED SHALL BE NO. 4 BARS. THE METAL REINFORCEMENT SHALL BE SMOOTH CUT TO ACCOMMODATE PIPES.
9. GRAY IRON CAST TO THE DIMENSIONS GIVEN FOR THE STEEL GRATES MAY BE USED. THE CASTINGS SHALL CONFORM TO AASHTO M306 CLASS 35B GRAY IRON CASTINGS.
10. INLET/CATCH BASIN GRATES MAY EITHER BE RESISTANCE WELDED OR ARC WELDED. IN EITHER CASE THE GRATE SHALL BE TRUE AND FLUSH.
11. GRATE B WILL BE USED ONLY WHEN SPECIFIED.
12. NOT TO SCALE.

REVISIONS

NO.	DATE	BY	NO.	DATE	BY	NO.	DATE	BY
1	4-82		6	11-04	MSM			
2	1-89		7	11-08	JRV			
3	12-94	MSM						
4	6-97	MSM						
5	3-01	MSM						

SCALES SHOWN ARE FOR 11" X 17" PRINTS ONLY

CADD FILE NAME: e6b_1108.std

DRAWING DATE: OCTOBER, 1980

IDAHO TRANSPORTATION DEPARTMENT

BOISE, IDAHO

ASSISTANT CHIEF ENGINEER (DEVELOPMENT)

CHIEF ENGINEER

STANDARD DRAWING

INLETS & CATCH BASINS TYPES 1A, 2A, & 3A

English

STANDARD DRAWING NO. E-6-B

SHEET 1 OF 2

PROFESSIONAL ENGINEER REGISTERED 6506 STATE OF IDAHO TED E. MASON 11/03/08

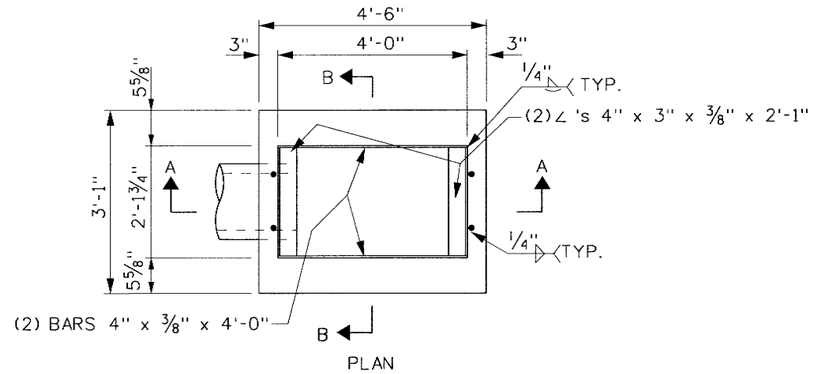

PLAN

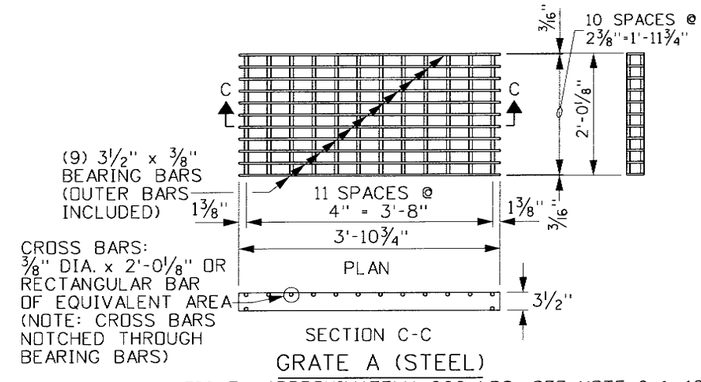

SECTION C-C

GRATE A (STEEL)

(WEIGHT : APPROXIMATELY 202 LBS., SEE NOTE 9 & 10)

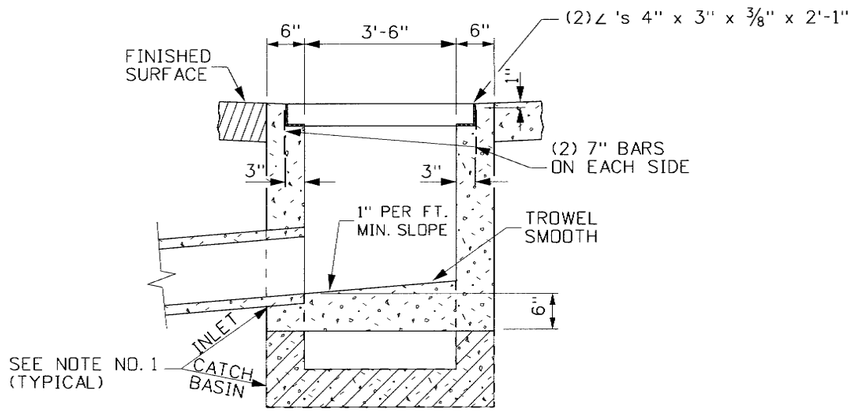

SECTION A-A

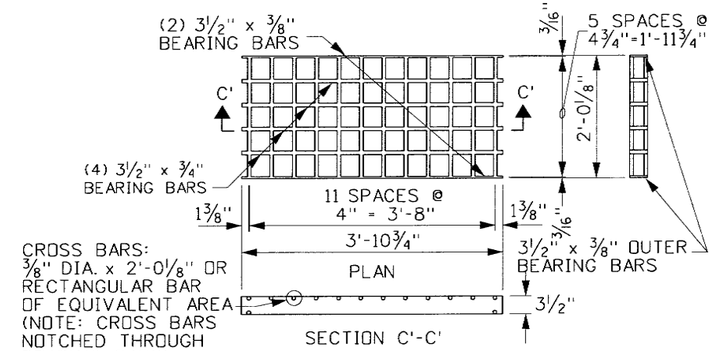

SECTION C'-C'

GRATE B (STEEL)

(WEIGHT : APPROXIMATELY 185 LBS., SEE NOTE 9 & 10)

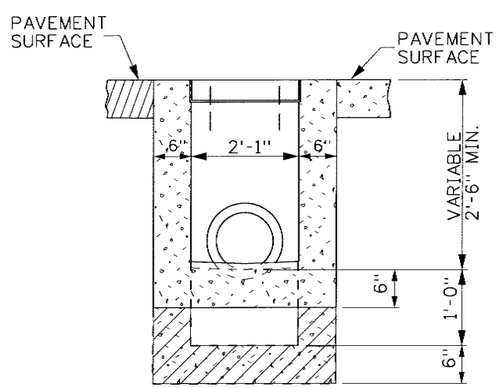

SECTION B-B

INLET - TYPE 3A

CATCH BASIN - TYPE 3A

REVISIONS								
NO.	DATE	BY	NO.	DATE	BY	NO.	DATE	BY
1	4-82		6	11-04	MSM			
2	1-89		7	11-08	JRV			
3	12-94	MSM						
4	6-97	MSM						
5	3-01	MSM						

SCALES SHOWN ARE FOR 11" X 17" PRINTS ONLY

CADD FILE NAME: e6b_1108.std

DRAWING DATE: OCTOBER, 1980

IDAHO TRANSPORTATION DEPARTMENT

BOISE, IDAHO

ASSISTANT CHIEF ENGINEER (DEVELOPMENT)

CHIEF ENGINEER

STANDARD DRAWING

INLETS & CATCH BASINS
TYPES 1A, 2A, & 3A

English

STANDARD DRAWING NO.

E-6-B

SHEET 2 OF 2

PROFESSIONAL ENGINEER REGISTERED 6506 STATE OF IDAHO TED E. MASON

11/03/08

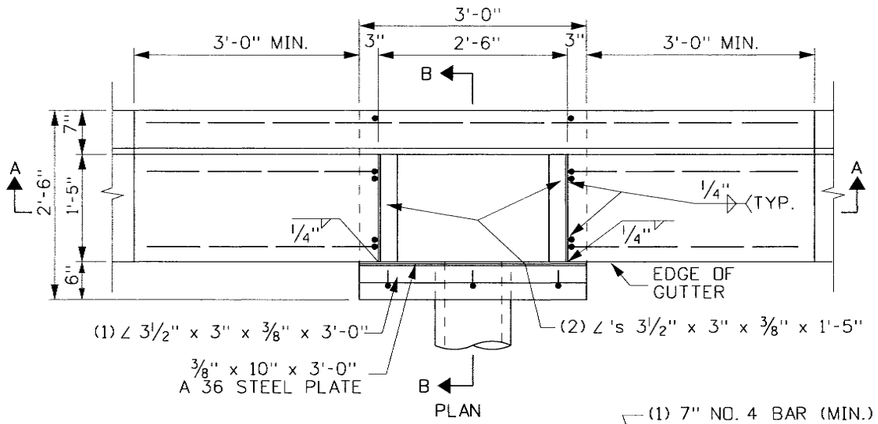

PLAN

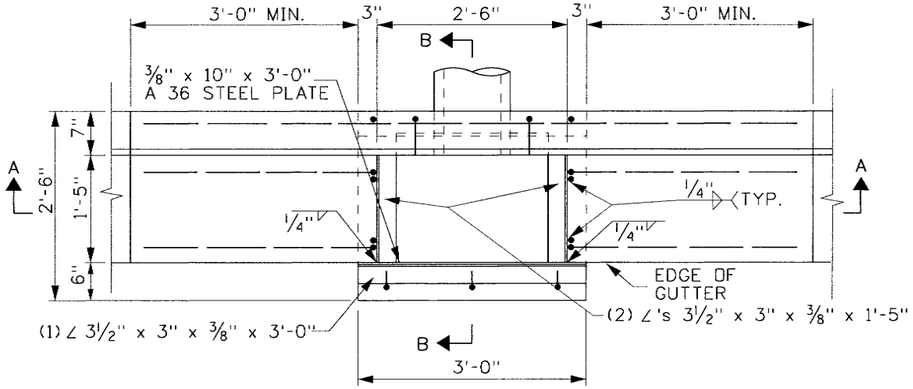

PLAN

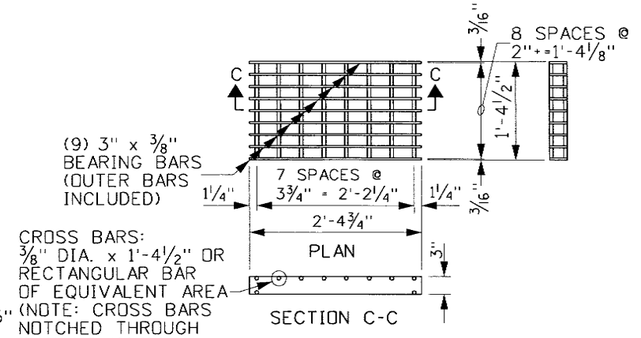

GRATE A (STEEL)

(WEIGHT: APPROXIMATELY 88 LBS., (SEE NOTE 9 & 10)

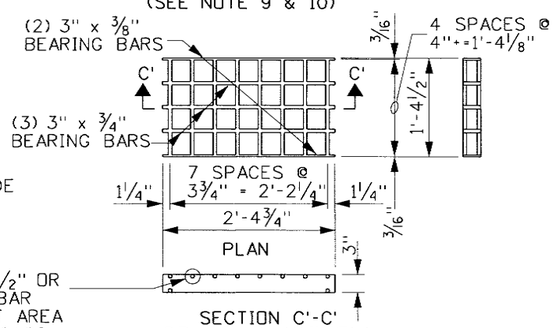

GRATE B (STEEL)

(WEIGHT: APPROXIMATELY 79 LBS., (SEE NOTE 9 & 10)

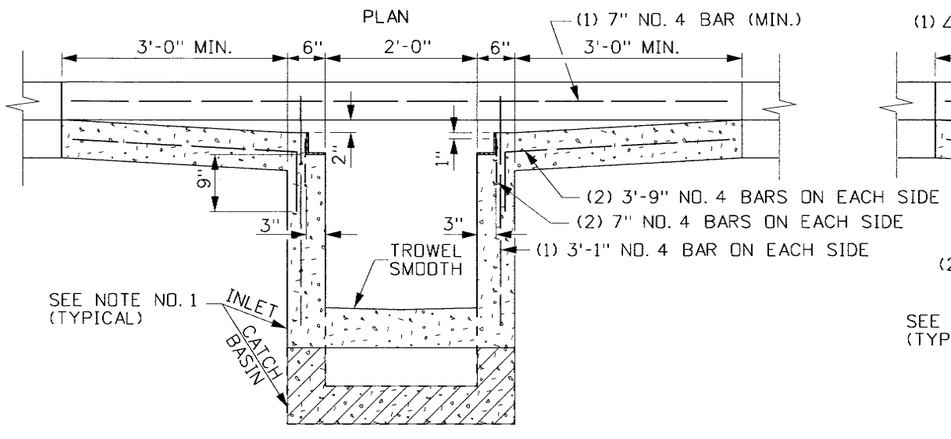

SECTION A-A

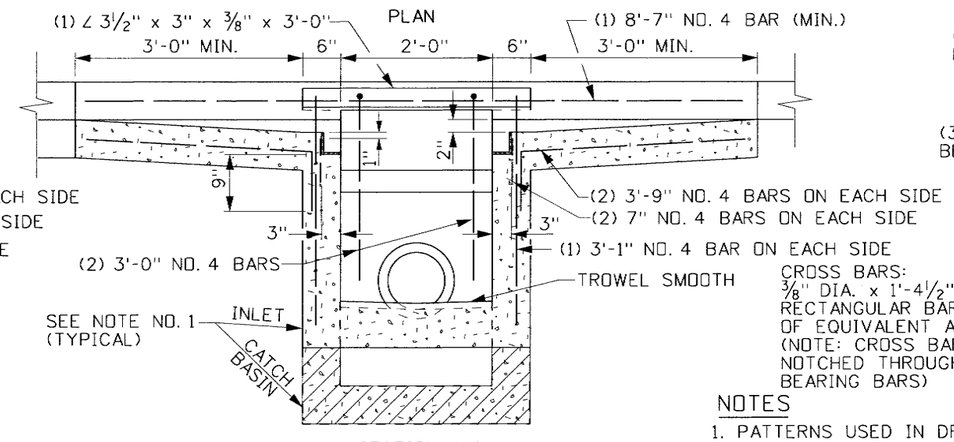

SECTION A-A

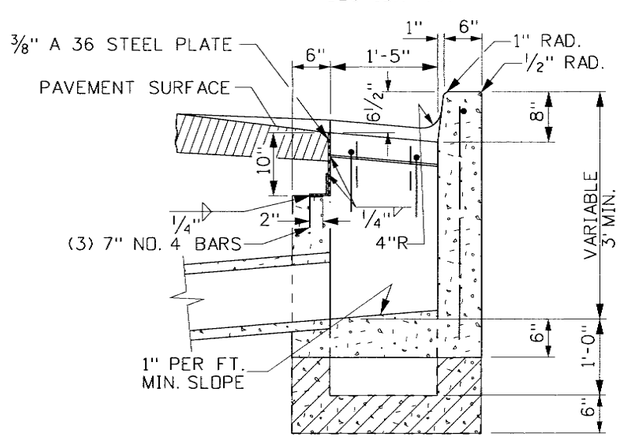

SECTION B-B

INLET - TYPE 4

CATCH BASIN - TYPE 4

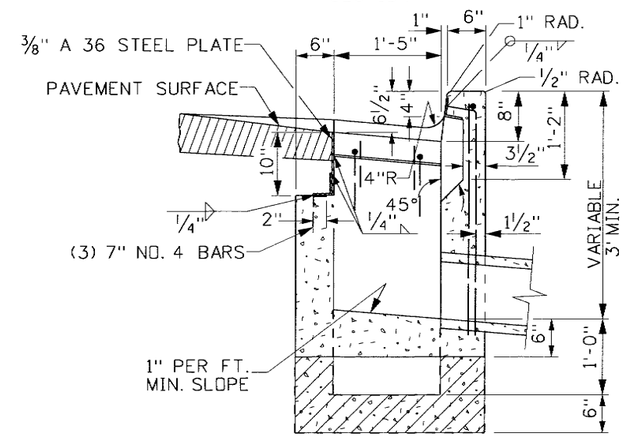

SECTION B-B

INLET - TYPE 5

CATCH BASIN - TYPE 5

NOTES

1. PATTERNS USED IN DRAWING:

   INLET SECTIONS: CATCH BASIN BOTTOMS: PAVEMENT:

2. INLETS AND CATCH BASINS MAY BE EITHER PRECAST OR CAST-IN-PLACE. PRECAST UNITS SHALL MEET THE REQUIREMENTS OF ASTM C 913. (PRIOR APPROVAL OF SHOP DRAWINGS WILL BE REQUIRED ON MODIFIED UNITS.)
3. A 1" SIDE DRAFT IS ALLOWED FOR FORM REMOVAL.
4. CAST-IN-PLACE INLETS AND CATCH BASINS SHALL CONFORM TO SECTION 609 - MINOR STRUCTURES OF THE CURRENT ITD STANDARD SPECIFICATIONS FOR HIGHWAY CONSTRUCTION.
5. THE GRADE LINE OF THE TOP INSIDE OF ANY PIPE SHALL ENTER AT A POINT NO LOWER THAN THE TOP INSIDE OF THE OUTLET PIPE.
6. PIPES CAN ENTER OR LEAVE THE BOX IN ANY DIRECTION. ALL CONNECTIONS AND BROKEN AREAS SHALL BE GROUTED SMOOTH.
7. STEEL ANGLES SHALL BE SET SO THAT EACH BEARING BAR OF PREFABRICATED GRATE SHALL HAVE FULL BEARING ON BOTH ENDS. THE FINISHED TOP OF CONCRETE SHALL BE EVEN WITH THE ANGLE/GRATE SURFACE. THE STRUCTURAL STEEL NEED NOT BE PAINTED BUT SHALL MEET THE REQUIREMENTS OF ASTM A 36.
8. ALL METAL REINFORCEMENT USED SHALL BE NO. 4 BARS. THE METAL REINFORCEMENT SHALL BE SMOOTH CUT TO ACCOMMODATE PIPES.
9. GRAY IRON CAST TO THE DIMENSIONS GIVEN FOR THE STEEL GRATES MAY BE USED. THE CASTINGS SHALL CONFORM TO AASHTO M306 CLASS 35B GRAY IRON CASTINGS.
10. INLET/CATCH BASIN GRATES MAY EITHER BE RESISTANCE WELDED OR ARC WELDED. IN EITHER CASE THE GRATE SHALL BE TRUE AND FLUSH.
11. GRATE B WILL BE USED ONLY WHEN SPECIFIED.
12. NOT TO SCALE.

REVISIONS

NO.	DATE	BY	NO.	DATE	BY	NO.	DATE	BY
1	10-80		6	6-97	MSM			
2	4-82		7	3-01	MSM			
3	3-84		8	12-04	MSM			
4	1-89		9	11-08	JRV			
5	12-94	MSM						

SCALES SHOWN ARE FOR 11" X 17" PRINTS ONLY

CADD FILE NAME: e6c_1008.std

DRAWING DATE: NOVEMBER, 1969

IDAHO TRANSPORTATION DEPARTMENT

BOISE, IDAHO

ASSISTANT CHIEF ENGINEER (DEVELOPMENT)

CHIEF ENGINEER

STANDARD DRAWING

INLETS & CATCH BASINS TYPES 4 & 5

English

STANDARD DRAWING NO.

E-6-C

SHEET 1 OF 1

PROFESSIONAL ENGINEER REGISTERED 6506 STATE OF IDAHO TED E. MASON

11/03/08

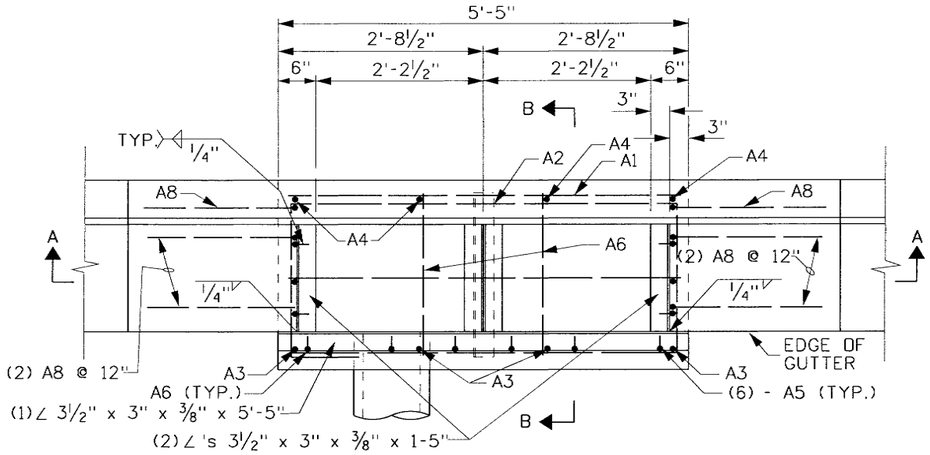

PLAN

BAR LIST					
MARK	LOCATION	SIZE	TOTAL LENGTH	NO.	SKETCH
A1	FLOOR & WALLS	4	5'-1"	2	5'-1"
A2	WALLS	4	15'-1"	3	5'-0" / 2'-1" 5'-0" 2'-1" / 1' MIN. OVERLAP
* A3	FRONT WALL	4	3'-7"	4	3'-7"
* A4	BACK WALL	4	4'-1"	4	4'-1"
A5	GRATE DOWEL	4	7"	10	2" 5"
A6	WALL	4	2'-2"	2	2'-2"
A7	GUTTER & SIDE WALLS	4	2'-9"	4	5° 2'-0" 9"
A8	CURB & BACK WALL	4	3'-3"	2	2'-0" 1'-3"
113.75 L.F. AT 0.668 LBS/FT. = 76.00 LBS					

* (SEE NOTE NO. 7)

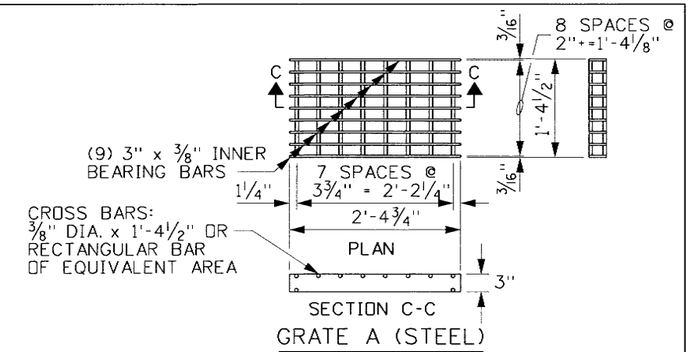

GRATE A (STEEL)

(WEIGHT : APPROXIMATELY 88 LBS., SEE NOTE 9)

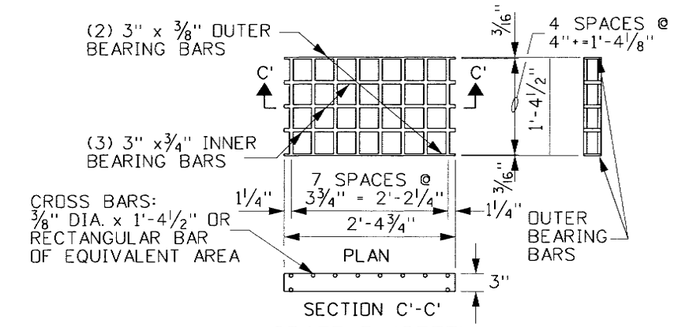

GRATE B (STEEL)

(WEIGHT : APPROXIMATELY 79 LBS., SEE NOTE 9)

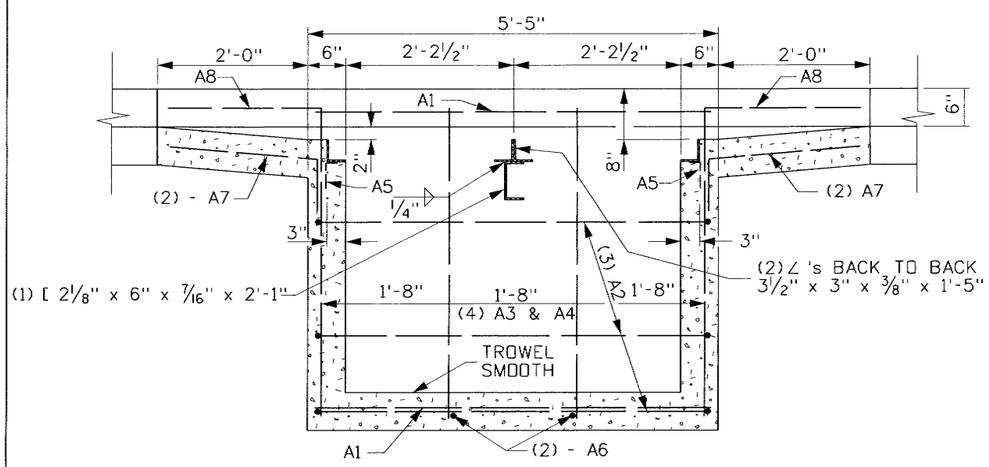

SECTION A-A

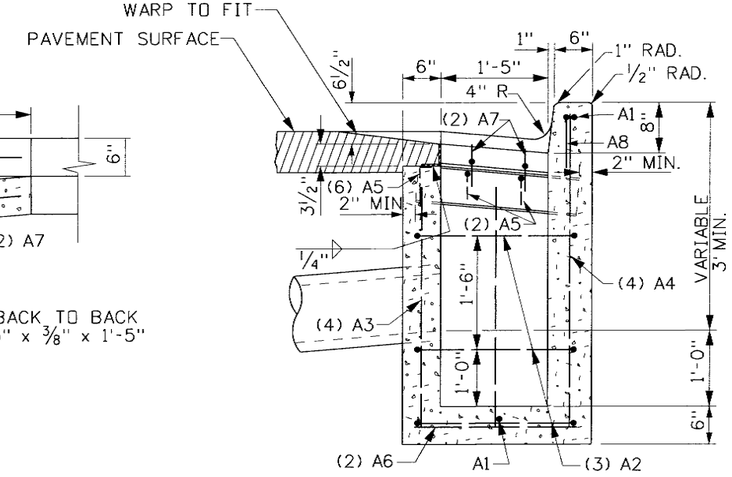

SECTION B-B

NOTES

1. CATCH BASINS MAY EITHER BE PRECAST OR CAST-IN-PLACE. PRECAST UNITS SHALL MEET THE REQUIREMENTS OF ASTM C913. PRIOR APPROVAL OF THE SHOP DRAWING WILL BE REQUIRED ON MODIFIED UNITS.
2. CAST-IN-PLACE CATCH BASINS SHALL CONFORM TO SECTION 609 - MINOR STRUCTURES OF THE CURRENT ITD STANDARD SPECIFICATIONS FOR HIGHWAY CONSTRUCTION.
3. A 1" SIDE DRAFT IS ALLOWED FOR FORM REMOVAL.
4. THE GRADE LINE OF THE TOP INSIDE OF ANY PIPE SHALL ENTER AT A POINT NO LOWER THAN THE TOP INSIDE OF THE OUTLET PIPE.
5. PIPES CAN ENTER OR LEAVE THE BOX IN ANY DIRECTION. ALL CONNECTIONS AND BROKEN AREAS SHALL BE GROUTED SMOOTH.
6. STEEL ANGLES SHALL BE SET SO THAT EACH BEARING BAR OF PREFABRICATED GRATE SHALL HAVE FULL BEARING ON BOTH ENDS. THE FINISHED TOP OF CONCRETE SHALL BE EVEN WITH THE ANGLE/GRATE SURFACE. THE STRUCTURAL STEEL NEED NOT BE PAINTED BUT SHALL MEET THE REQUIREMENTS OF ASTM A 36.
7. ALL METAL REINFORCEMENT USED SHALL BE NO. 4 BARS. THE METAL REINFORCEMENT SHALL BE SMOOTH CUT TO ACCOMMODATE PIPES. VERTICAL BARS NEED TO BE LENGTHENED FOR CATCH BASINS DEEPER THAN 4'-6".
8. GRATE B WILL BE USED ONLY WHEN SPECIFIED.
9. GRAY IRON CAST TO THE DIMENSIONS GIVEN FOR THE STEEL GRATES MAY BE USED. THE CASTINGS SHALL CONFORM TO AASHTO M306 CLASS 35B GRAY IRON CASTINGS.
10. CATCH BASIN GRATES MAY EITHER BE RESISTANCE WELDED OR ARC WELDED. IN EITHER CASE THE GRATE SHALL BE TRUE AND FLUSH.
11. NOT TO SCALE.

CATCH BASIN - DETAILS

REVISIONS								
NO.	DATE	BY	NO.	DATE	BY	NO.	DATE	BY
1	10-80		6	3-01	MSM			
2	4-82		7	12-04	MSM			
3	3-84		8	11-08	JRV			
4	1-89							
5	12-94	MSM						

SCALES SHOWN ARE FOR 11" X 17" PRINTS ONLY

CADD FILE NAME: e6d_1108.std

DRAWING DATE: OCTOBER, 1980

IDAHO TRANSPORTATION DEPARTMENT

BOISE IDAHO

ASSISTANT CHIEF ENGINEER (DEVELOPMENT)

CHIEF ENGINEER

STANDARD DRAWING

CATCH BASIN TYPE 6

English

STANDARD DRAWING NO.

E-6-D

SHEET 1 OF 1

PROFESSIONAL ENGINEER REGISTERED 6506 STATE OF IDAHO TED E. MASON 11/03/08

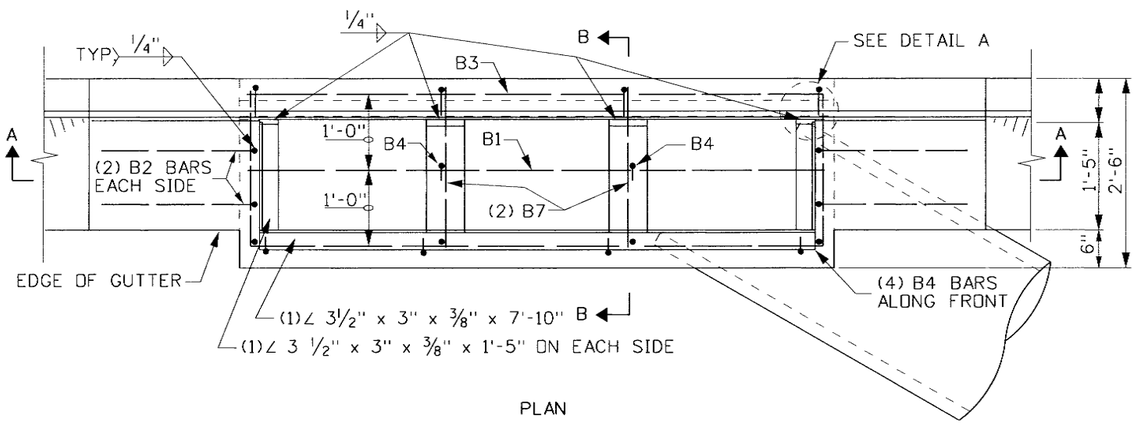

PLAN

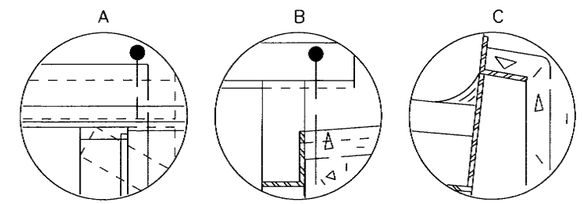

DETAILS A, B, & C

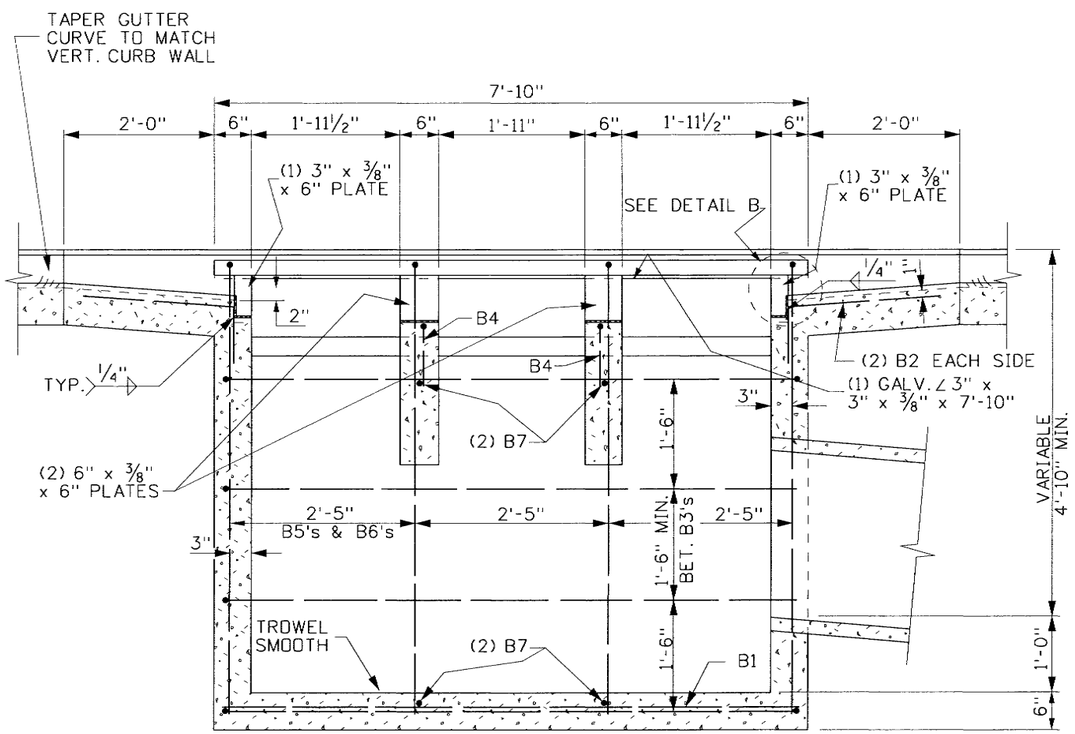

SECTION A-A

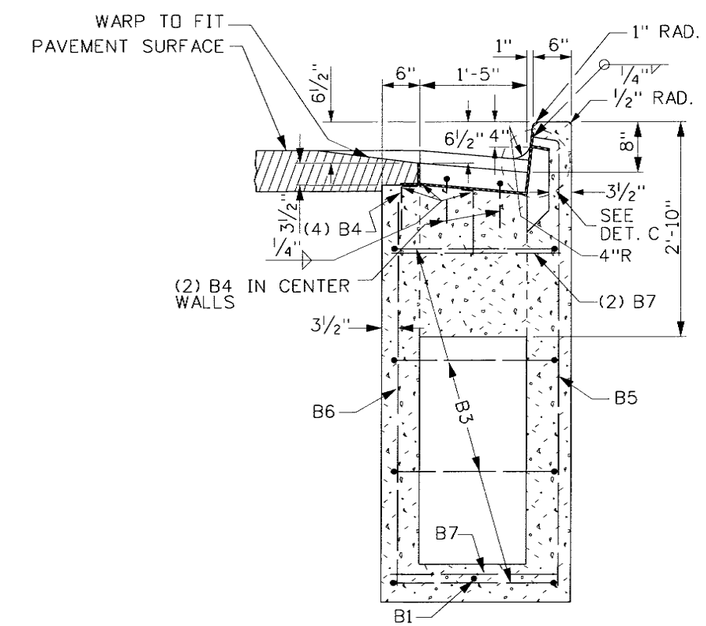

SECTION B-B

CATCH BASIN - DETAILS

REVISIONS								
NO.	DATE	BY	NO.	DATE	BY	NO.	DATE	BY
1	10-80		6	3-01	MSM			
2	4-82		7	12-04	MSM			
3	3-84		8	11-08	JRV			
4	1-89							
5	12-94	MSM						

SCALES SHOWN ARE FOR 11" X 17" PRINTS ONLY

CADD FILE NAME: e6b_1108.std

DRAWING DATE: OCTOBER, 1980

IDAHO TRANSPORTATION DEPARTMENT

BOISE IDAHO

ASSISTANT CHIEF ENGINEER (DEVELOPMENT)

CHIEF ENGINEER

STANDARD DRAWING

CATCH BASIN TYPE 7

English

STANDARD DRAWING NO.

E-6-E

SHEET 1 OF 2

PROFESSIONAL ENGINEER REGISTERED 6506 STATE OF IDAHO TED E. MASON 11/03/08

BAR LIST					
MARK	LOCATION	SIZE	BAR LENGTH	NO.	SKETCH
B1	FLOOR	4	7'-6"	1	7'-6"
B2	WALLS	4	2'-9"	4	2'-0" / 9"
B3	WALLS (ADD AS NEEDED)	4	20'-0"	4	1'-0" 7'-5" / 7'-5" / 2'-1" / 2'-1"
B4	WALL & SUPPORTS	4	1'-0"	6	9 1/2" / 2 1/2"
B5	WALLS & FLOOR (ADD LENGTH AS NEEDED)	4	6'-2"	4	5'-10" / 4"
B6	WALLS & FLOOR (ADD LENGTH AS NEEDED)	4	5'-0"	4	5'-0"
B7	SUPPORTS	4	2'-2"	4	2'-2"
157.8 L.F. AT 0.668 LBS/FT. = 106 LBS					

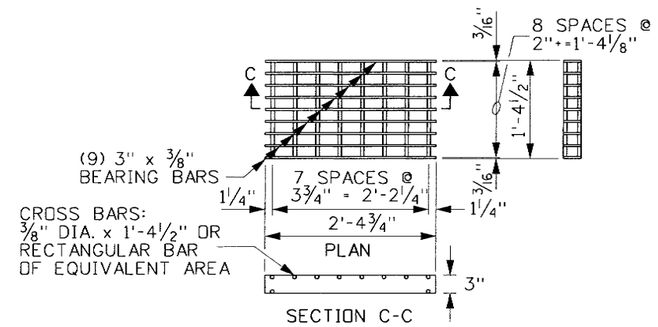

GRATE A (STEEL)

(WEIGHT : APPROXIMATELY 88 LBS., SEE NOTE 9)

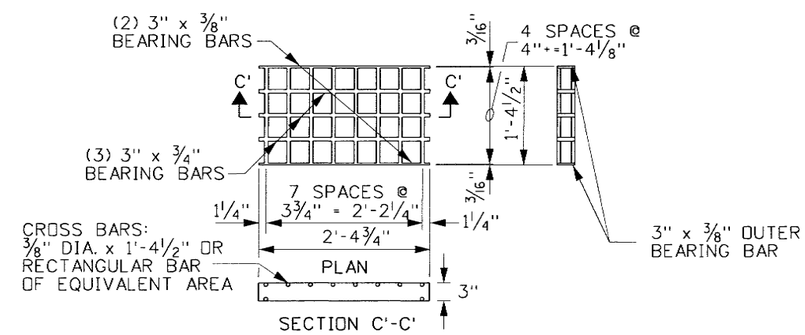

GRATE B (STEEL)

(WEIGHT : APPROXIMATELY 79 LBS., SEE NOTE 8 & 9)

NOTES

1. CATCH BASINS MAY BE EITHER PRECAST OR CAST-IN-PLACE. PRECAST UNITS SHALL MEET THE REQUIREMENTS OF ASTM C913. PRIOR APPROVAL OF THE SHOP DRAWING WILL BE REQUIRED ON PRECAST UNITS.
2. A 1" SIDE DRAFT IS ALLOWED FOR FORM REMOVAL.
3. CAST-IN-PLACE CATCH BASINS SHALL CONFORM TO SECTION 609 - MINOR STRUCTURES OF THE CURRENT ITD STANDARD SPECIFICATIONS FOR HIGHWAY CONSTRUCTION.
4. THE GRADE LINE OF THE TOP INSIDE OF ANY PIPE SHALL ENTER AT A POINT NO LOWER THAN THE TOP INSIDE OF THE OUTLET PIPE.
5. PIPES CAN ENTER OR LEAVE THE BOX IN ANY DIRECTION. ALL CONNECTIONS AND BROKEN AREAS SHALL BE GROUTED SMOOTH.
6. STEEL ANGLES SHALL BE SET SO THAT EACH BEARING BAR OF PREFABRICATED GRATE SHALL HAVE FULL BEARING ON BOTH ENDS. THE FINISHED TOP OF CONCRETE SHALL BE EVEN WITH THE ANGLE/GRATE SURFACE. THE STRUCTURAL STEEL NEED NOT BE PAINTED BUT SHALL MEET THE REQUIREMENTS OF ASTM A36.
7. ALL METAL REINFORCEMENT SHALL BE NO. 4 BARS. METAL REINFORCEMENT SHALL BE SMOOTH CUT TO FIT AROUND PIPES. VERTICAL BARS B5 & B6 NEED TO LENGTHENED TO ACCOMMODATE CATCH BASINS DEEPER THAN 6'-4".
8. GRATE B WILL BE USED ONLY WHEN SPECIFIED.
9. GRAY IRON CAST TO THE DIMENSIONS GIVEN FOR THE STEEL GRATES MAY BE USED. THE CASTINGS SHALL CONFORM TO AASHTO M306 CLASS 35B GRAY IRON CASTINGS.
10. NOT TO SCALE.

REVISIONS								
NO.	DATE	BY	NO.	DATE	BY	NO.	DATE	BY
1	10-80		6	3-01	MSM			
2	4-82		7	12-04	MSM			
3	3-84		8	11-08	JRV			
4	1-89							
5	12-94	MSM						

SCALES SHOWN ARE FOR 11" X 17" PRINTS ONLY

CADD FILE NAME: e6b_1108.std

DRAWING DATE: OCTOBER, 1980

IDAHO TRANSPORTATION DEPARTMENT

BOISE IDAHO

ASSISTANT CHIEF ENGINEER (DEVELOPMENT)

CHIEF ENGINEER

STANDARD DRAWING

CATCH BASIN TYPE 7

English

STANDARD DRAWING NO.

E-6-E

SHEET 2 OF 2

PROFESSIONAL ENGINEER REGISTERED 6506 STATE OF IDAHO TED E. MASON

11/03/08

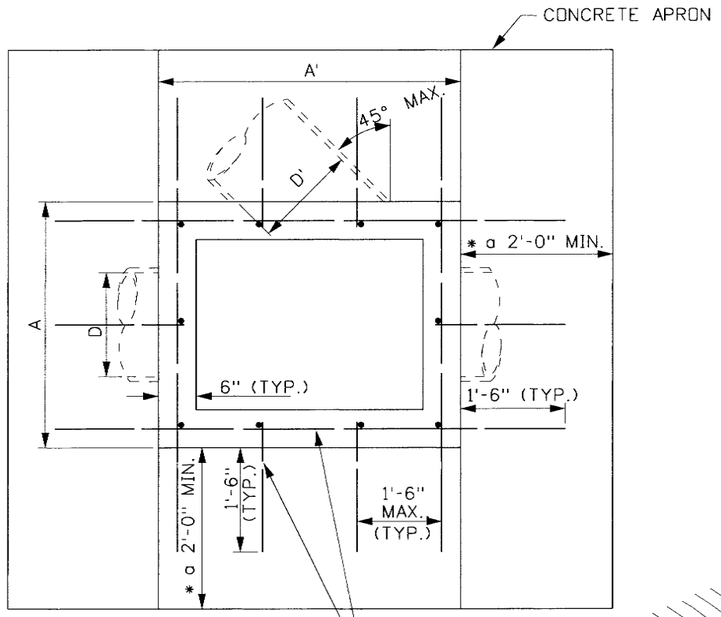

* a ADJUST TO FIT FIELD CONDITIONS

METAL REINFORCEMENT NO. 4 BARS

PLAN

* b TABLE OF DIMENSIONS						
D/D'	A/A'	B MIN.	F/F'	G	BARS (EA.)	T
18"	3'-4"	3'-0"	2'-3"	3"	1	1/4"
24"	4'-0"	3'-7"	2'-11"	3 3/16"	2	1/4"
30"	4'-6"	4'-3"	3'-5"	3 1/8"	3	5/16"
36"	5'-0"	4'-9"	3'-11"	3 1/8"	3	3/8"
48"	6'-0"	5'-2"	4'-11"	3 3/8"	4	7/16"

* b SEE NOTE NO. 5

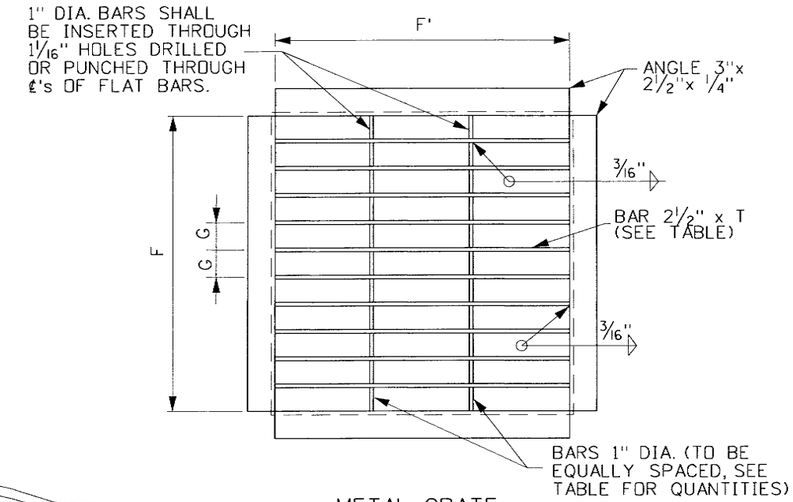

METAL GRATE

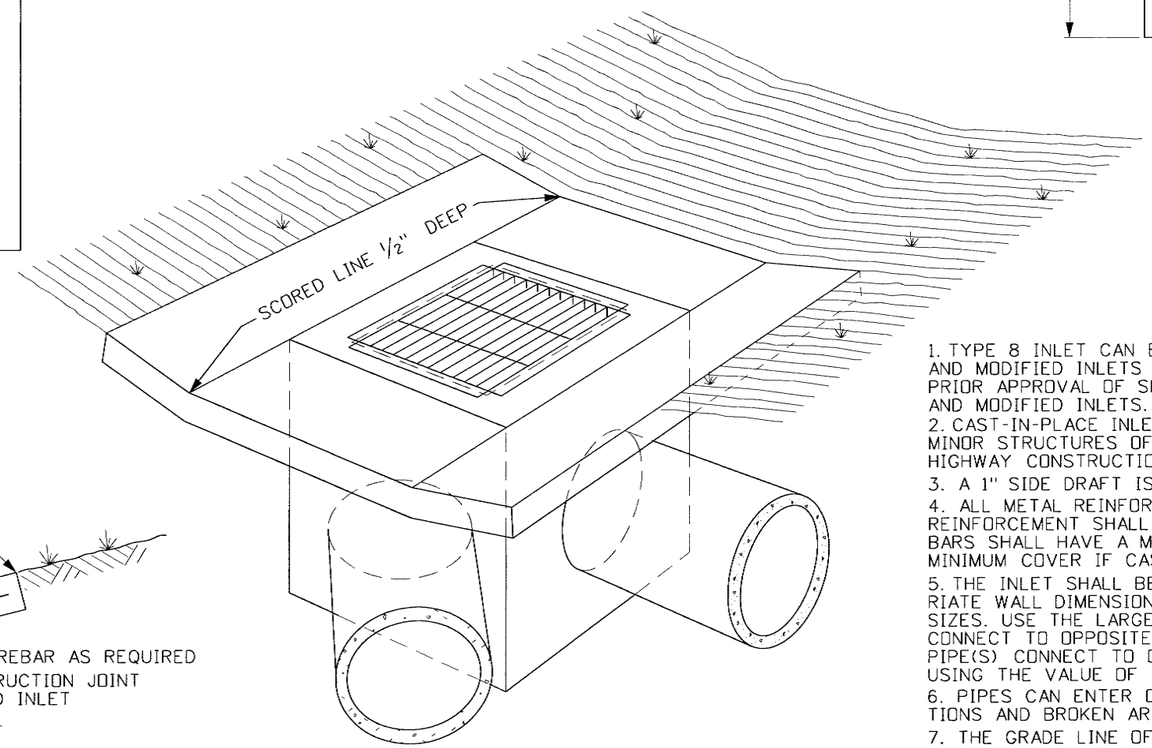

PERSPECTIVE VIEW

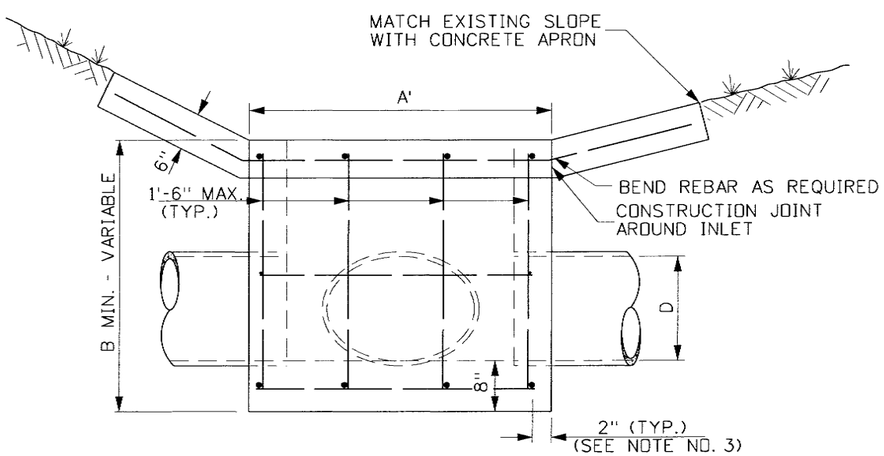

ELEVATION

NOTES

1. TYPE 8 INLET CAN BE EITHER PRECAST OR CAST-IN-PLACE. PRECAST AND MODIFIED INLETS SHALL MEET THE REQUIREMENTS OF ASTM C913. PRIOR APPROVAL OF SHOP DRAWINGS IS REQUIRED FOR USE OF PRECAST AND MODIFIED INLETS. THE APRON MUST BE CAST-IN-PLACE.
2. CAST-IN-PLACE INLET TYPE 8 SHALL CONFORM TO SECTION 609 - MINOR STRUCTURES OF THE CURRENT ITD STANDARD SPECIFICATIONS FOR HIGHWAY CONSTRUCTION.
3. A 1" SIDE DRAFT IS ALLOWED FOR FORM REMOVAL.
4. ALL METAL REINFORCEMENT USED SHALL BE NO. 4 BARS. THE METAL REINFORCEMENT SHALL BE SMOOTH CUT TO ACCOMMODATE PIPES. ALL BARS SHALL HAVE A MINIMUM CONCRETE COVER OF 2" AND/OR 3" MINIMUM COVER IF CAST AGAINST EARTH.
5. THE INLET SHALL BE CONSTRUCTED RECTANGULAR USING THE APPROPRIATE WALL DIMENSIONS (A & A') DETERMINED BY THE CONNECTING PIPE SIZES. USE THE LARGER WALL DIMENSION IF TWO DIFFERENT PIPE SIZES CONNECT TO OPPOSITE WALLS. USE THE MINIMUM WALL DIMENSION IF NO PIPE(S) CONNECT TO OPPOSITE WALLS. SELECT THE DEPTH (B MIN.) BY USING THE VALUE OF THE INLET'S LARGEST CONNECTING PIPE.
6. PIPES CAN ENTER OR LEAVE THE BOX IN ANY DIRECTION. ALL CONNECTIONS AND BROKEN AREAS SHALL BE GROUTED SMOOTH.
7. THE GRADE LINE OF THE TOP INSIDE OF ANY INLET PIPE SHALL BE AT A POINT NO LOWER THAN THE TOP INSIDE OF THE OUTLET PIPE.
8. ONLY COMBINATIONS OF THE DIMENSIONS SHOWN ON THE TABLE SHALL BE USED TO CONSTRUCT A TYPE 8 INLET.
9. THE METAL FOR THE GRATE SHALL MEET THE REQUIREMENTS OF ASTM A36. THE METAL GRATE NEED NOT BE PAINTED OR GALVANIZED.
10. WELDING OF THE METAL GRATE SHALL MEET THE REQUIREMENTS OF THE AMERICAN WELDING SOCIETY D1.1.
11. GRAY IRON CAST TO THE DIMENSIONS GIVEN FOR THE STEEL GRATES MAY BE USED. THE CASTINGS SHALL CONFORM TO AASHTO M306 CLASS 35B GRAY IRON CASTINGS.
12. NOT TO SCALE.

INLET - DETAILS

REVISIONS								
NO.	DATE	BY	NO.	DATE	BY	NO.	DATE	BY
1	10-80		6	11-08	JRV			
2	12-92	MSM						
3	1-97	MSM						
4	3-01	MSM						
5	12-04	MSM						

SCALES SHOWN ARE FOR 11" X 17" PRINTS ONLY

CADD FILE NAME: e6f_1108.std

DRAWING DATE: AUGUST, 1972

IDAHO TRANSPORTATION DEPARTMENT

BOISE IDAHO

P Thomas
ASSISTANT CHIEF ENGINEER (DEVELOPMENT)

CHIEF ENGINEER

STANDARD DRAWING

INLET TYPE 8

English

STANDARD DRAWING NO.

E-6-F

SHEET 1 OF 1

PROFESSIONAL ENGINEER REGISTERED 6506 STATE OF IDAHO TED E. MASON

Ted E. Mason 11/03/08

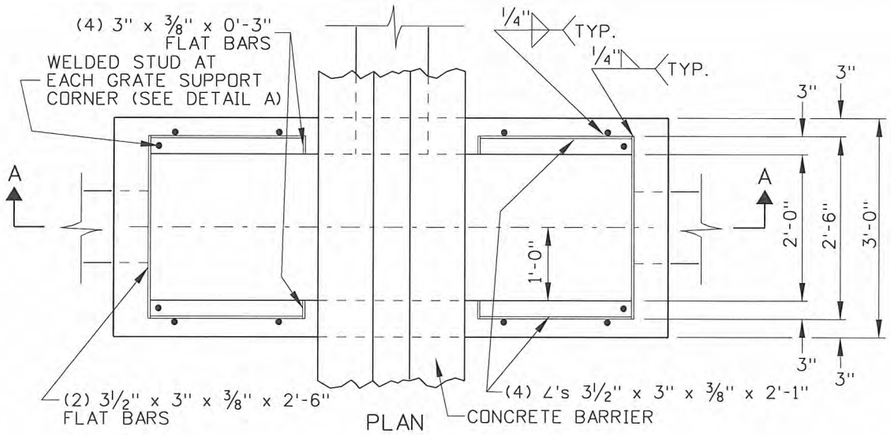

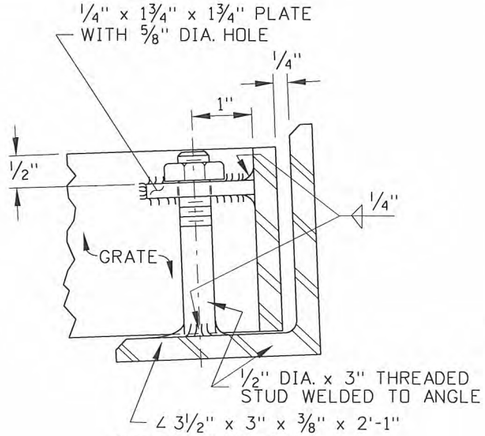

DETAIL A

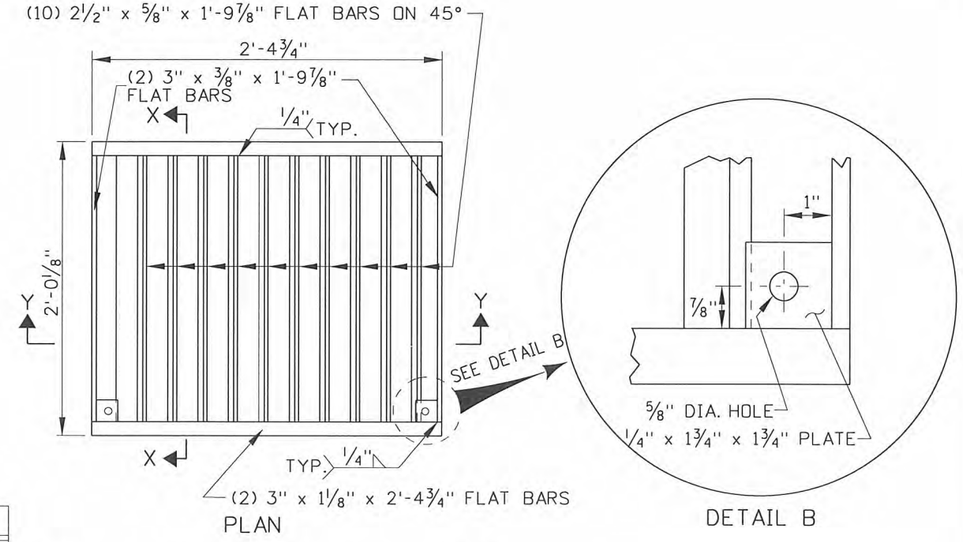

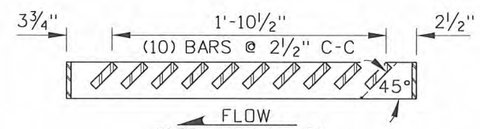

SECTION Y-Y

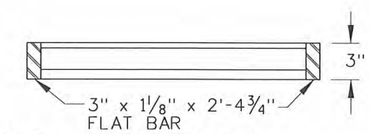

SECTION X-X

GRATE DETAILS
(SEE NOTE NO. 9)

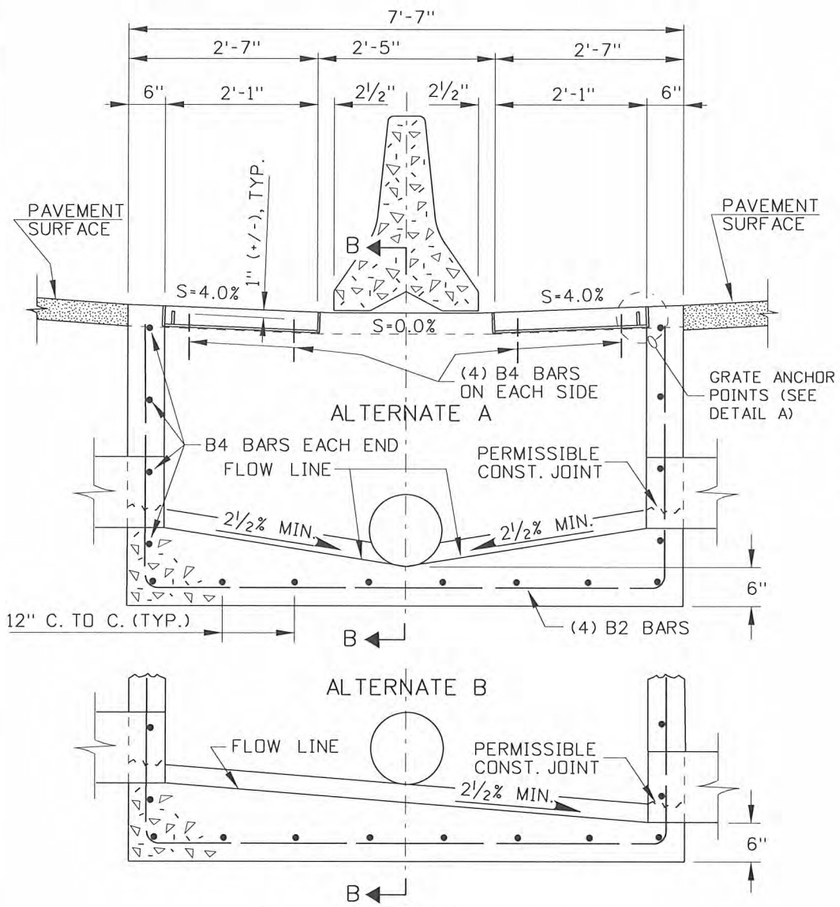

ELEVATION - SECTION A-A

BAR LIST					
MARK	LOCATION	SIZE	BAR LENGTH	NO.	SKETCH
B1	VERT. IN WALLS & FLOOR (ADD LENGTH AS NEEDED)	4	VARIES	6	3'-8" MIN. 2'-7"
B2	VERT. IN WALLS & FLOOR (ADD LENGTH AS NEEDED)	4	VARIES	4	3'-8" MIN. 7'-1"
B3	WALLS (AS NEEDED)	4	7'-2"	*	7'-2"
B4	WALLS (AS NEEDED)	4	2'-8"	*	2'-8"
B5	WELDED TO: ∠'s 3 1/2" x 3" x 3/8" IN SIDE WALLS	4	7"	6	12"
* (4) MIN., ADD BARS AS NEEDED					

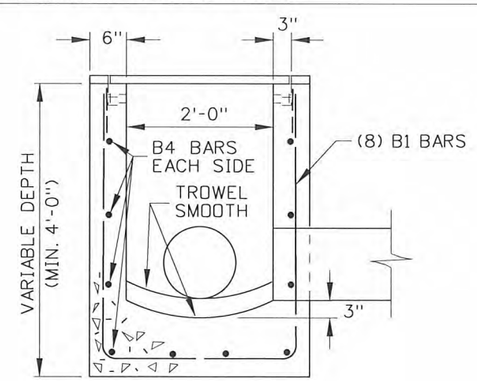

SECTION B-B

NOTES

1. INLET MEDIAN DRAIN MAY BE EITHER PRECAST OR CAST-IN-PLACE. PRECAST UNITS SHALL MEET THE REQUIREMENTS OF ASTM C913. PRIOR APPROVAL OF THE SHOP DRAWING WILL BE REQUIRED ON PRECAST UNITS.
2. A 1" SIDE DRAFT IS ALLOWED FOR FORM REMOVAL.
3. CAST-IN-PLACE INLET MEDIAN DRAINS SHALL CONFORM TO SECTION 609 - MINOR STRUCTURES OF THE CURRENT ITD STANDARD SPECIFICATIONS FOR HIGHWAY CONSTRUCTION.
4. THE GRADE LINE OF THE TOP INSIDE OF ANY PIPE SHALL ENTER AT A POINT NO LOWER THAN THE TOP INSIDE OF THE OUTLET PIPE.
5. PIPES CAN ENTER OR LEAVE THE BOX IN ANY DIRECTION. ALL CONNECTIONS AND BROKEN AREAS SHALL BE GROUTED SMOOTH.
6. STEEL ANGLES SHALL BE SET SO THAT EACH BEARING BAR OF PREFABRICATED GRATE SHALL HAVE FULL BEARING ON BOTH ENDS. THE FINISHED TOP OF CONCRETE SHALL BE EVEN WITH THE ANGLE/GRATE SURFACE. THE STRUCTURAL STEEL NEED NOT BE PAINTED BUT SHALL MEET THE REQUIREMENTS OF ASTM A36.
7. ALL METAL REINFORCEMENT SHALL BE NO. 4 BARS. METAL REINFORCEMENT SHALL BE SMOOTH CUT TO FIT AROUND PIPES. VERTICAL BARS NEED TO LENGTHENED TO ACCOMMODATE INLET DEPTH.
8. THE (10) FLAT BARS AT THE 45° ANGLE MUST BE POINTED DOWN AND IN THE DIRECTION OF THE FLOW.
9. GRAY IRON CAST TO THE DIMENSIONS GIVEN FOR THE STEEL GRATES MAY BE USED. THE CASTINGS SHALL CONFORM TO AASHTO M306 CLASS 35B GRAY IRON CASTINGS.
10. NOT TO SCALE.

INLET MEDIAN DRAIN - DETAILS

REVISIONS								
NO.	DATE	BY	NO.	DATE	BY	NO.	DATE	BY
1	5-07	MSM						
2	9-10	PLR						

SCALES SHOWN ARE FOR 11" X 17" PRINTS ONLY

CADD FILE NAME: e6g_1010.std

DRAWING DATE: DECEMBER, 2004

IDAHO TRANSPORTATION DEPARTMENT

BOISE IDAHO

ASSISTANT CHIEF ENGINEER (DEVELOPMENT)

CHIEF ENGINEER

STANDARD DRAWING

INLET MEDIAN DRAIN TYPE 9

English

STANDARD DRAWING NO.

E-6-G

SHEET 1 OF 1

PROFESSIONAL ENGINEER REGISTERED 6506 STATE OF IDAHO TED E. MASON 10/26/2010

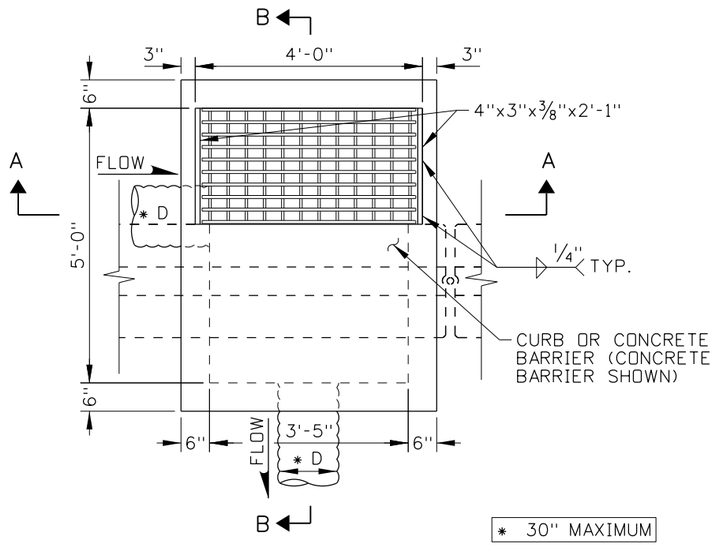

PLAN

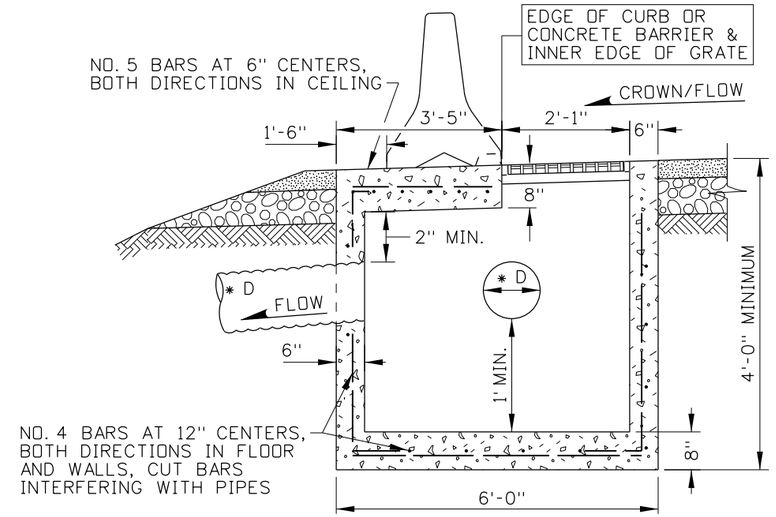

SECTION B-B

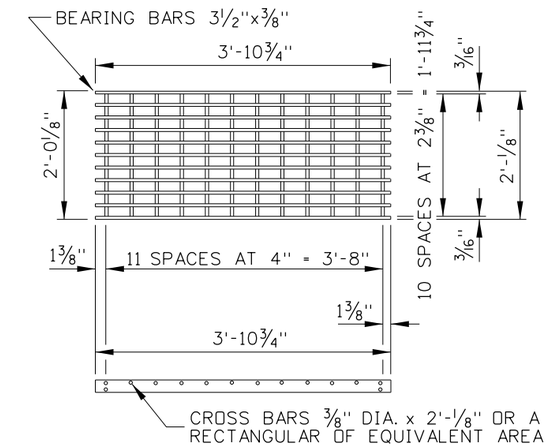

WEIGHT: APPROXIMATELY 203 LBS

METAL GRATE

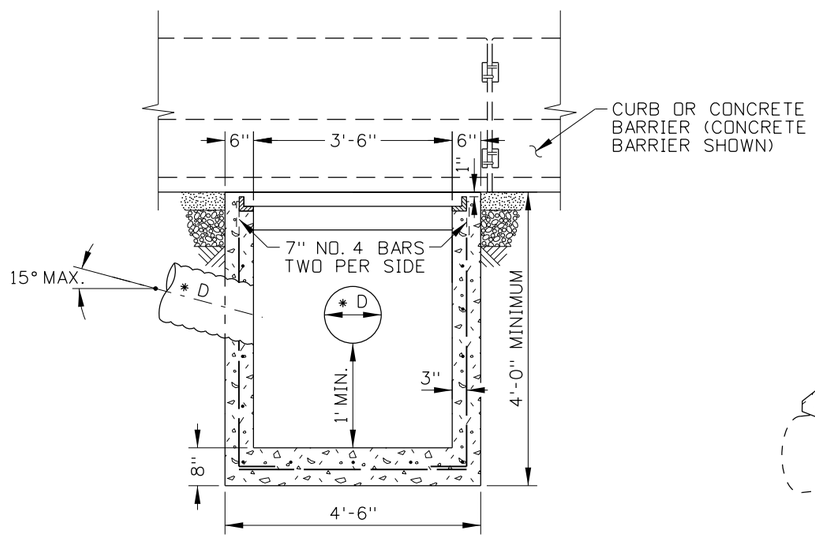

SECTION A-A

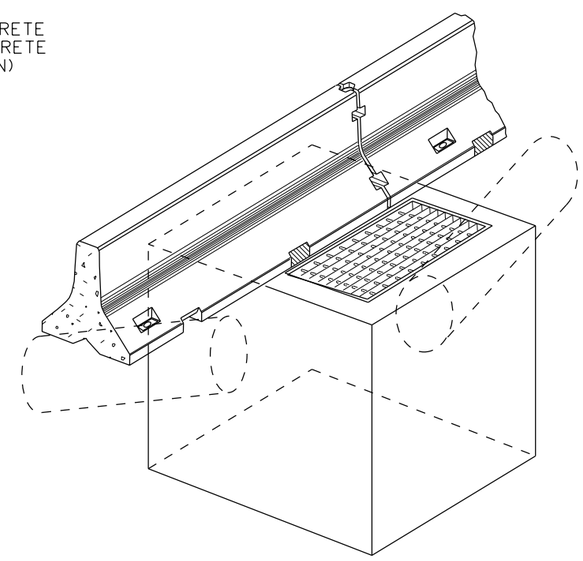

ISOMETRIC VIEW
(10' BARRIER SHOWN)

NOTES

1. CATCH BASIN TYPE 10 IS FOR USE WITH RUNOFF DRAIN OR EMBANKMENT PROTECTOR WITH SLOTTED DRAIN, STANDARD DRAWING D-1-B.

2. A 1" SIDE DRAFT IS ALLOWED FOR FORM REMOVAL.

3. CATCH BASINS FOR SLOTTED DRAINS CAN BE PRECAST OR CAST-IN-PLACE. ENSURE THAT PRECAST CATCH BASINS MEET THE REQUIREMENTS OF AASHTO M 199. TILT PRECAST CATCH BASINS OR CONSTRUCT CAST-IN-PLACE CATCH BASINS TO MATCH THE ROADWAY CROWN. OBTAIN THE ENGINEER'S APPROVAL PRIOR TO THE INSTALLATION OF PRECAST CATCH BASINS.

4. CONSTRUCT CAST-IN-PLACE CATCH BASINS IN ACCORDANCE WITH SECTION 609 - MINOR STRUCTURES OF THE STANDARD SPECIFICATIONS FOR HIGHWAY CONSTRUCTION.

5. PROVIDE A MINIMUM CONCRETE COVER OF 2" OVER REINFORCING STEEL. PROVIDE A MINIMUM CONCRETE COVER OF 3" OVER REINFORCING STEEL IF CAST AGAINST EARTH.

6. ENSURE THAT THE FINISHED TOP OF CONCRETE IS FLUSH WITH THE GRATE SURFACE.

7. ENSURE THAT THE METAL FOR THE GRATE MEETS THE REQUIREMENTS OF ASTM A36. PAINTING OR GALVANIZATION OF THE METAL GRATE IS NOT REQUIRED.

8. WELD THE METAL GRATE IN ACCORDANCE WITH THE REQUIREMENTS OF THE AMERICAN WELDING SOCIETY D1.1.

9. SET ANGLES SO THAT EACH BEARING BAR OF THE PREFABRICATED GRATE HAS FULL BEARING ON BOTH ENDS.

10. ENSURE THAT THE DISCHARGE PIPE SIZE IS THE SAME SIZE AS THE SLOTTED DRAIN PIPE. GROUT PIPE CONNECTIONS.

11. NOT TO SCALE.

ORIGINAL STORED AT: ITD, Headquarters 3311 West State Boise, Idaho

ORIGINAL SIGNED BY: RYAN D. LANCASTER DATE ORIGINAL SIGNED: JANUARY 31, 2013

REVISIONS								
NO.	DATE	BY	NO.	DATE	BY	NO.	DATE	BY

SCALES SHOWN ARE FOR 11" X 17" PRINTS ONLY

CADD FILE NAME: e6h_0213.std

DRAWING DATE: DECEMBER, 2012

IDAHO TRANSPORTATION DEPARTMENT

BOISE IDAHO

ORIGINAL SIGNED BY: LOREN THOMAS
HIGHWAYS PROGRAM OVERSIGHT ENGINEER
ORIGINAL SIGNED BY: TOM COLE
CHIEF ENGINEER

STANDARD DRAWING

CATCH BASIN TYPE 10

REQUIRES STD. DWG. D-1-B

English

STANDARD DRAWING NO.

E-6-H

SHEET 1 OF 1

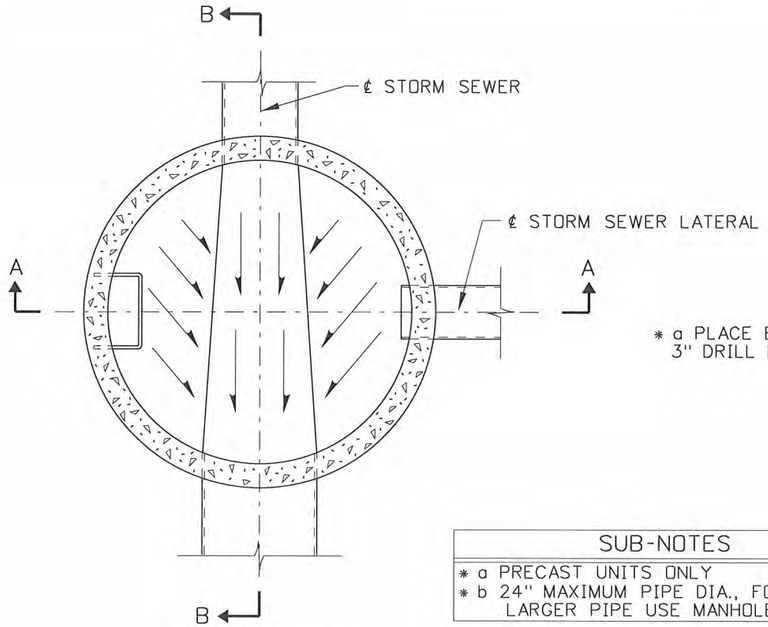

SECTION C-C

(SCALE 1/2"=1')

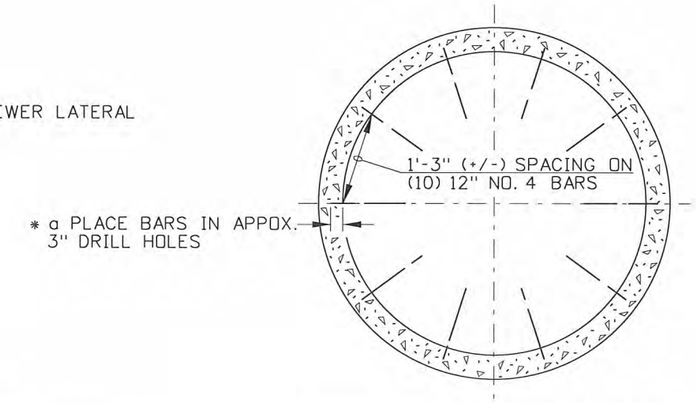

FLOOR METAL REINFORCEMENT

SUB-NOTES
* a PRECAST UNITS ONLY
* b 24" MAXIMUM PIPE DIA., FOR LARGER PIPE USE MANHOLE TYPE D.

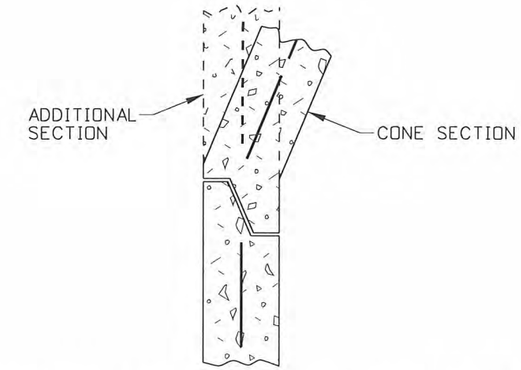

PRECAST CONSTRUCTION JOINT DETAIL

(NO SCALE)

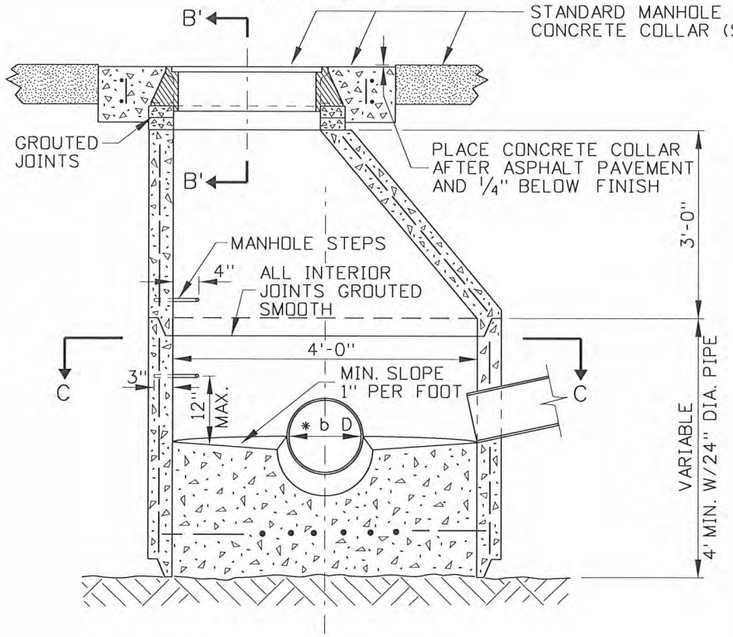

SECTION A-A

(SCALE 1/2"=1')

TOP - SECTION B'-B'

(SCALE 1/2"=1')

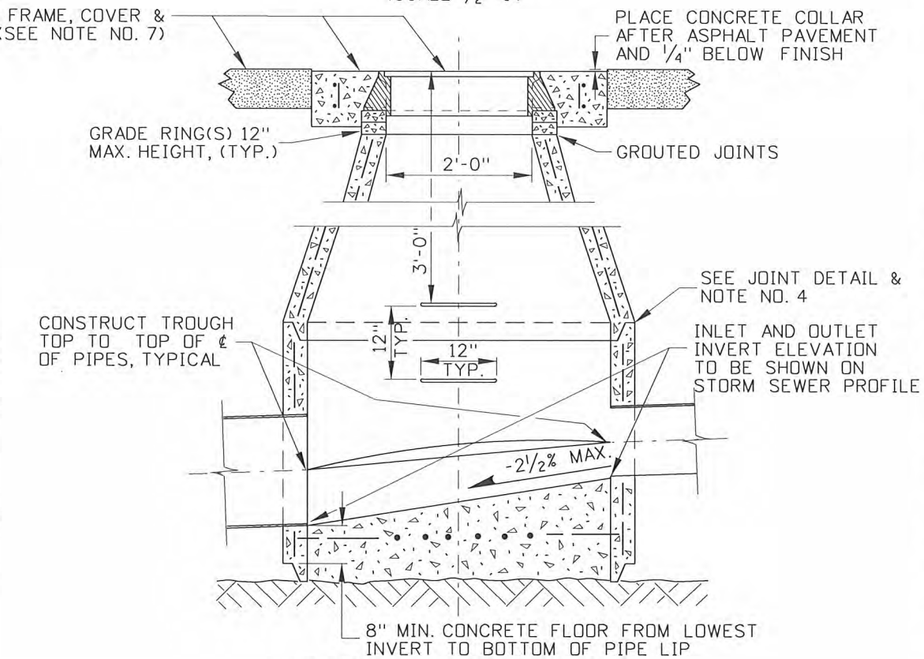

BOTTOM - SECTION B-B

(SCALE 1/2"=1')

NOTES

1. CARE SHALL BE TAKEN TO AVOID PLACING MANHOLES IN WHEEL PATHS.
2. MANHOLES TYPE A MAY BE EITHER PRECAST OR CAST-IN-PLACE. PRECAST MANHOLES SHALL MEET THE REQUIREMENTS OF ASTM C478. PRIOR APPROVAL OF THE SHOP DRAWING WILL BE REQUIRED ON PRECAST UNITS WITH FLOOR AND/OR PIPE OPENINGS.
3. CAST-IN-PLACE MANHOLES TYPE A SHALL CONFORM TO SECTION 609 - MINOR STRUCTURES OF THE CURRENT ITD STANDARD SPECIFICATIONS FOR HIGHWAY CONSTRUCTION. CAST-IN-PLACE MANHOLES SHALL HAVE 6" WALLS AND MINIMUM 8" FLOORS. THE METAL REINFORCEMENT USED ON THE WALLS AND FLOORS SHALL BE NO. 4 BARS. ALL REINFORCEMENT SHALL HAVE A MINIMUM CONCRETE COVER OF 2" AND/OR 3" IF CAST AGAINST EARTH.
4. ALL CONNECTIONS AND BROKEN AREAS SHALL BE GROUTED SMOOTH TO FORM A WATER TIGHT MANHOLE. MASTIC SEALANTS, GASKETS, AND O-RINGS USED ON PRECAST SECTION(S) CONSTRUCTION JOINT(S) SHALL CONFORM TO AASHTO AND ASTM REQUIREMENTS.
5. BENDS IN THE MAIN STORM SEWER SHALL BE MADE BY FORMING CURVED CHANNELS WITHIN THE MANHOLE. THE INSIDE OF THE TOP LATERAL PIPES MAY NOT BE LOWER THAN THE INSIDE TOP OF MAIN SEWER PIPES. WHEN THE INVERT OF A LATERAL PIPE FALLS BELOW THE 1" PER FOOT MINIMUM SLOPE LINE, THE CHANNEL SHALL BE FORMED FROM THE LATERAL PIPE TO THE MAIN SEWER.
6. WHEN MANHOLE STEPS ARE REQUIRED AN ECCENTRIC CONE SECTION SHALL BE USED. PLASTIC COATED MANHOLE STEPS SHALL BE PLACED IN MANHOLES GREATER THAN 4' IN DEPTH. PLASTIC COATED MANHOLE STEPS SHALL CONFORM TO IDAHO STANDARDS FOR PUBLIC WORKS CONSTRUCTION.
7. USE OF A PLASTIC MANHOLE FRAME SUPPORT, I. E. WHIRLY-GIG OR COMPARABLE DEVICE, IS AN ACCEPTABLE CONSTRUCTION OPTION (FOR FURTHER INFORMATION REFER TO STANDARD DRAWING E-9).
8. CHEMICAL RESISTANT LINERS MAY BE REQUIRED (SEE PLANS AND/OR SPECIAL PROVISIONS).
9. STANDARD DRAWING E-9 SHALL ACCOMPANY THIS DRAWING.

REVISIONS

NO.	DATE	BY	NO.	DATE	BY	NO.	DATE	BY
1	3-64		6	12-93	MSM	11	9-10	PLR
2	4-71		7	11-01	MSM			
3	5-74		8	6-03	MSM			
4	2-75		9	12-04	MSM			
5	12-92	MSM	10	5-07	MSM			

SCALES SHOWN ARE FOR 11" X 17" PRINTS ONLY

CADD FILE NAME: e7__1010.std

DRAWING DATE: JUNE, 1961

IDAHO TRANSPORTATION DEPARTMENT

BOISE IDAHO

ASSISTANT CHIEF ENGINEER (DEVELOPMENT)

CHIEF ENGINEER

STANDARD DRAWING

MANHOLE TYPE A

REQUIRES STD. DWG. E-9

English

STANDARD DRAWING NO.

E-7

SHEET 1 OF 1

PROFESSIONAL ENGINEER REGISTERED 6506 STATE OF IDAHO TED E. MASON

10/26/2010

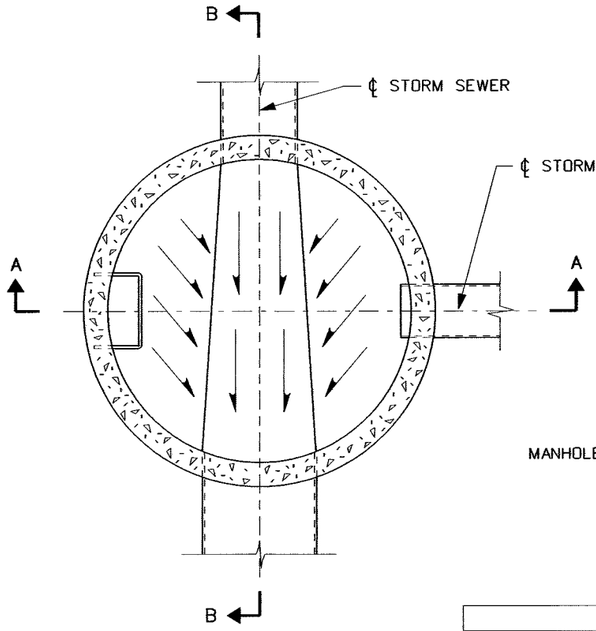

SECTION C-C
(SCALE ½"=1')

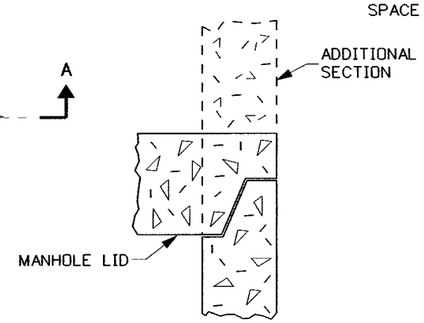

PRECAST JOINT DETAIL
(NO SCALE)

SUB-NOTES
* a MANHOLE TYPE C (48" DIA. SECTION), MANHOLE TYPE D (60" DIA. SECTION)
* b 24" MAX. PIPE DIA. W/48" DIA. SECTION 36" MAX. PIPE W/60" DIA. SECTION

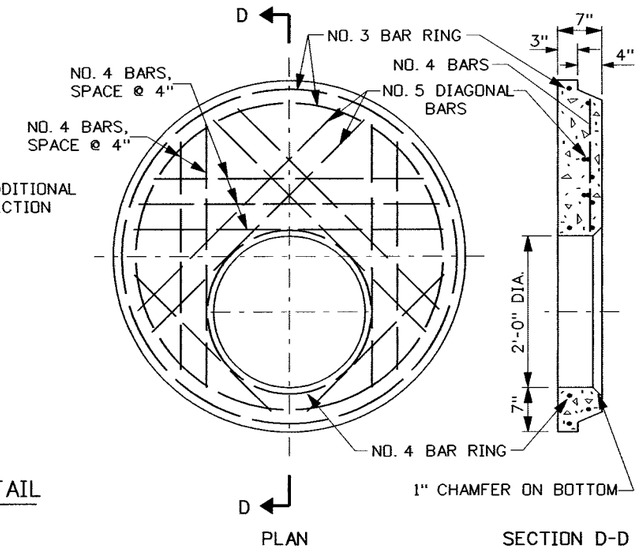

48" DIA. FLAT LID
(SCALE ½"=1')

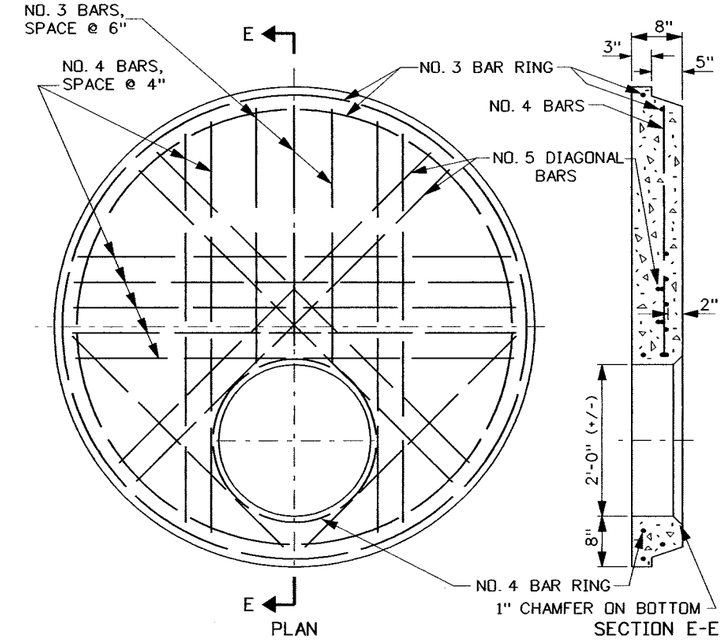

60" DIA. FLAT LID
(SCALE ½"=1')

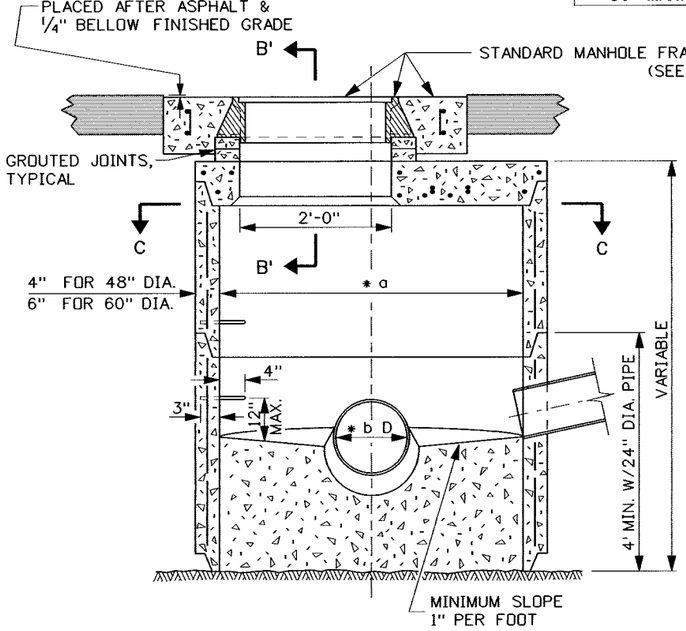

SECTION A-A
(SCALE ½"=1')

TOP - SECTION B'-B'
(SCALE ½"=1')

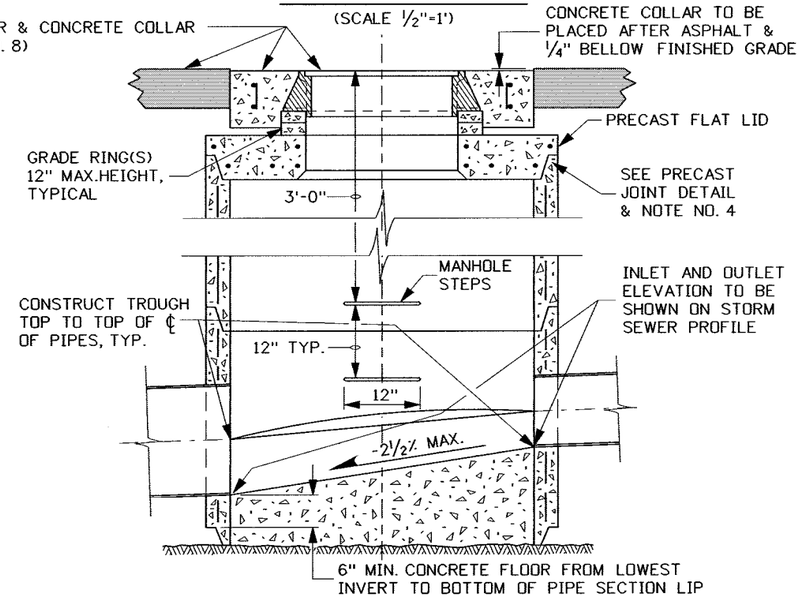

BOTTOM - SECTION B-B
(SCALE ½"=1')

NOTES

1. CARE SHALL BE TAKEN TO AVOID PLACING MANHOLES IN WHEEL PATHS.
2. MANHOLES TYPE C & D MAY BE EITHER PRECAST OR CAST-IN-PLACE. PRECAST MANHOLES SHALL MEET THE REQUIREMENTS OF ASTM C478. PRIOR APPROVAL OF THE SHOP DRAWING WILL BE REQUIRED ON PRECAST UNITS WITH FLOOR AND/OR PIPE OPENINGS.
3. CAST-IN-PLACE MANHOLES TYPE C & D SHALL CONFORM TO SECTION 609 - MINOR STRUCTURES OF THE CURRENT "ITD STANDARD SPECIFICATIONS FOR HIGHWAY CONSTRUCTION". CAST-IN-PLACE MANHOLES SHALL HAVE 6" WALLS AND MINIMUM 8" FLOORS. THE METAL REINFORCEMENT USED ON THE WALLS AND FLOORS SHALL BE NO. 4 BARS. ALL REINFORCEMENT SHALL HAVE A MINIMUM CONCRETE COVER OF 2" AND/OR 3" IF CAST AGAINST EARTH.
4. ALL CONNECTIONS AND BROKEN AREAS SHALL BE GROUTED SMOOTH TO FORM A WATER TIGHT MANHOLE. MASTIC SEALANTS, GASKETS, AND O-RINGS USED ON PRECAST SECTION(S) CONSTRUCTION JOINT(S) SHALL CONFORM TO AASHTO AND ASTM REQUIREMENTS.
5. BENDS IN THE MAIN STORM SEWER SHALL BE MADE BY FORMING CURVED CHANNELS WITHIN THE MANHOLE. THE INSIDE OF THE TOP LATERAL PIPES MAY NOT BE LOWER THAN THE INSIDE TOP OF MAIN SEWER PIPES. WHEN THE INVERT OF THE LATERAL PIPE FALLS BELLOW THE 1" PER FOOT MINIMUM SLOPE LINE, THE CHANNEL SHALL BE FORMED FROM THE LATERAL PIPE TO THE MAIN SEWER.
6. THE CONCERTE MANHOLE LIDS SHALL BE DESIGNED FOR AASHTO H-25 LIVE LOADS.
7. WHEN MANHOLE STEPS ARE REQUIRED AN ECCENTRIC CONE SECTION SHALL BE USED. PLASTIC COATED MANHOLE STEPS SHALL BE PLACED IN MANHOLES GREATER THAN 4' IN DEPTH. MANHOLE STEPS SHALL CONFORM TO IDAHO STANDARDS FOR PUBLIC WORKS CONSTRUCTION, STANDARD DRAWING SD-509 AND SECTION 504.06 PLASTIC COATED MANHOLE STEPS.
8. USE OF A PLASTIC MANHOLE FRAME SUPPORT, I.E. WHIRLY-GIG OR COMPARABLE DEVICE, IS AN ACCEPTABLE CONSTRUCTION OPTION (FOR FURTHER INFORMATION REFER TO STANDARD DRAWING E-9).

REVISIONS

NO.	DATE	BY	NO.	DATE	BY	NO.	DATE	BY
1	12-92	MSM						
2	11-01	MSM						
3	12-04	MSM						
4	5-07	MSM						

SCALES SHOWN ARE FOR 11" X 17" PRINTS ONLY

CADD FILE NAME e7c_0507.std

DRWG. ORIG. DATE: MAY, 1981

IDAHO TRANSPORTATION DEPARTMENT

BOISE IDAHO

P. A. Thomas
ASSISTANT CHIEF ENGINEER (DEVELOPMENT)

Steven C. Hutchenson
CHIEF ENGINEER

STANDARD DRAWING

MANHOLES TYPE C & D

REQUIRES STD. DWG. E-9

English

STANDARD DRWG. NO.

E-7-C

SHEET 1 OF 1

PROFESSIONAL ENGINEER * LAND SURVEYOR * REGISTERED 2240 5-16-07 STATE OF IDAHO MILFORD MILLER

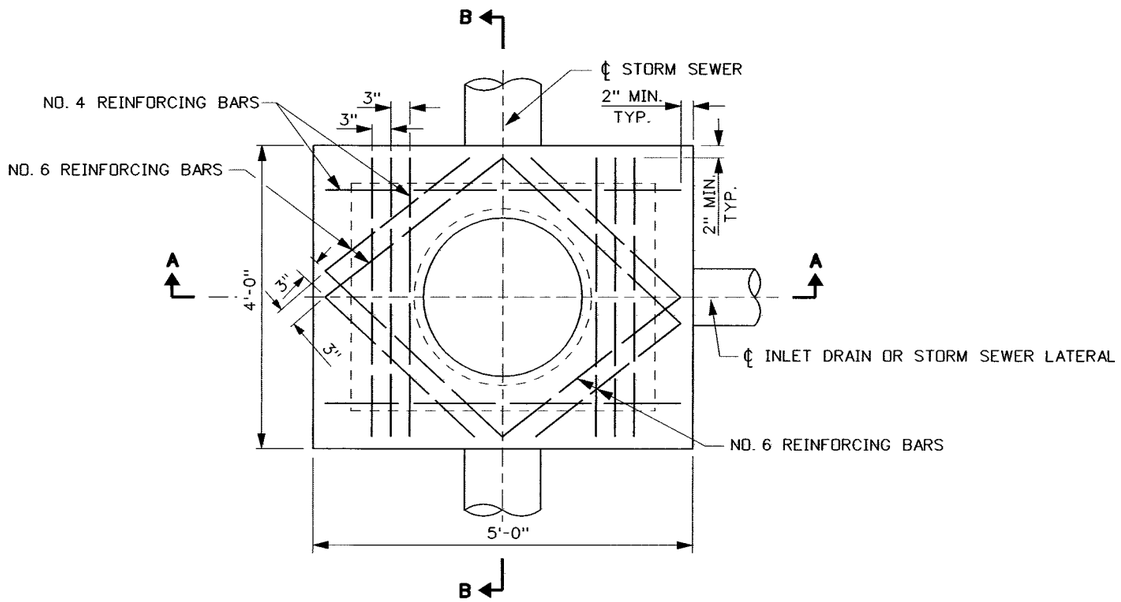

MANHOLE TOP

SECTION C-C

(SCALE 1/2" = 1')

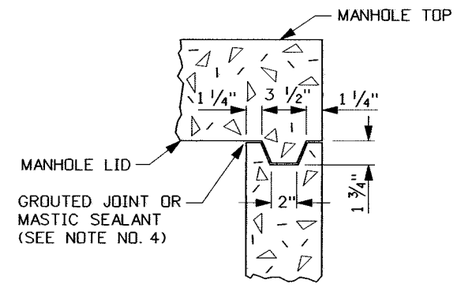

CONSTRUCTION JOINT DETAIL

(NO SCALE)

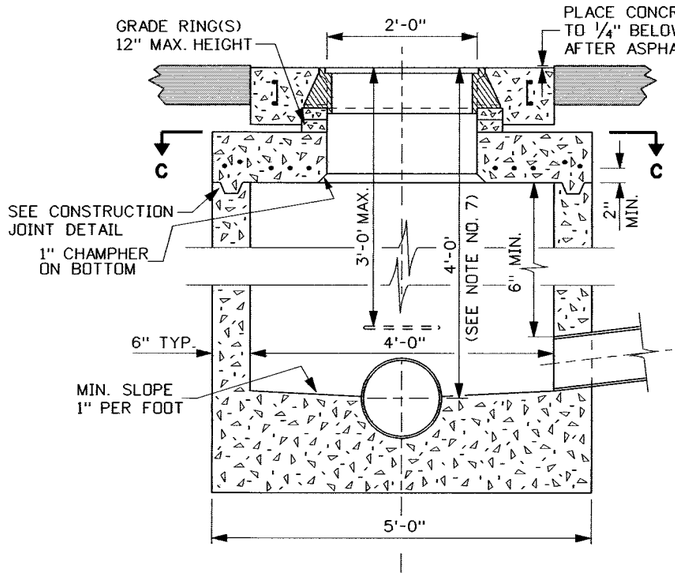

SECTION A-A

(SCALE 1/2" = 1')

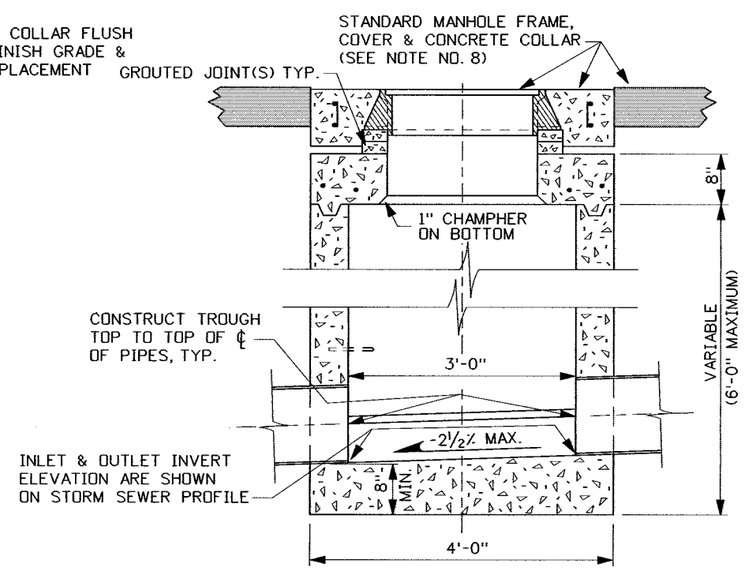

SECTION B-B

(SCALE 1/2" = 1')

NOTES

1. CARE SHALL BE TAKEN TO AVOID PLACING MANHOLES IN WHEEL PATHS.
2. MANHOLE TYPE B MAY BE EITHER PRECAST OR CAST-IN-PLACE. PRECAST MANHOLES SHALL MEET THE REQUIREMENTS OF ASTM C478. PRIOR APPROVAL OF THE SHOP DRAWING WILL BE REQUIRED ON PRECAST UNITS WITH FLOOR AND/OR PIPE OPENINGS.
3. CAST-IN-PLACE MANHOLE TYPE B SHALL CONFORM TO SECTION 609 - MINOR STRUCTURES OF THE CURRENT ITD STANDARD SPECIFICATIONS FOR HIGHWAY CONSTRUCTION. CAST-IN-PLACE MANHOLES SHALL HAVE 6" WALLS AND MINIMUM 8" FLOORS. THE METAL REINFORCEMENT USED ON THE WALLS AND FLOORS SHALL BE NO. 4 BARS. ALL REINFORCEMENT SHALL HAVE A MINIMUM CONCRETE COVER OF 2" AND/OR 3" IF CAST AGAINST EARTH.
4. ALL CONNECTIONS AND BROKEN AREAS SHALL BE GROUTED SMOOTH TO FORM A WATER TIGHT MANHOLE. MASTIC SEAL ANTS, GASKETS, USED ON PRECAST SECTION(S) CONSTRUCTION JOINT(S) SHALL CONFORM TO AASHTO AND ASTM REQUIREMENTS
5. BENDS IN THE MAIN STORM SEWER SHALL BE MADE BY FORMING CURVED CHANNELS WITHIN THE MANHOLE. THE INSIDE OF THE TOP LATERAL PIPES MAY NOT BE LOWER THAN THE INSIDE TOP OF MAIN SEWER PIPES. WHEN THE INVERT OF THE LATERAL PIPE FALLS BELLOW THE 1" PER FOOT MINIMUM SLOPE LINE, THE CHANNEL SHALL BE FORMED FROM THE LATERAL PIPE TO THE MAIN SEWER.
6. THE CONCRETE MANHOLE LIDS SHALL BE DESIGNED FOR AASHTO H-25 LIVE LOADS.
7. WHEN MANHOLE DEPTH IS GREATER THAN 4'-0" INSTALL MANHOLE STEP(S), THE NORMAL STEP-TO-STEP SPACING IS 12" AND THE STEP PROTRUDES FROM THE MANHOLE WALL 4".
8. USE OF A PLASTIC MANHOLE FRAME SUPPORT, I. E. WHIRLY-GIG OR COMPARABLE DEVICE IS AN ACCEPTABLE CONSTRUCTION OPTION (FOR FURTHER INFORMATION REFER TO STANDARD DRAWING E-9).
9. STANDARD DRAWING E-9 SHALL ACCOMPANY THIS DRAWING.

REVISIONS

NO.	DATE	BY	NO.	DATE	BY	NO.	DATE	BY
1	3-64		6	9-04	MSM			
2	4-71		7	5-07	MSM			
3	5-71							
4	12-92	MSM						
5	11-01	MSM						

SCALES SHOWN ARE FOR 11" X 17" PRINTS ONLY

CADD FILE NAME e8__0507.std

DRWG. ORIG. DATE: JUNE, 1961

IDAHO TRANSPORTATION DEPARTMENT

BOISE IDAHO

ASSISTANT CHIEF ENGINEER (DEVELOPMENT)

CHIEF ENGINEER

STANDARD DRAWING

MANHOLE TYPE B

REQUIRES STD. DWG. E-9

English

STANDARD DRWG. NO.

E-8

SHEET 1 OF 1

PROFESSIONAL ENGINEER * LAND SURVEYOR REGISTERED 2240 5-16-07 STATE OF IDAHO MILFORD MILLER

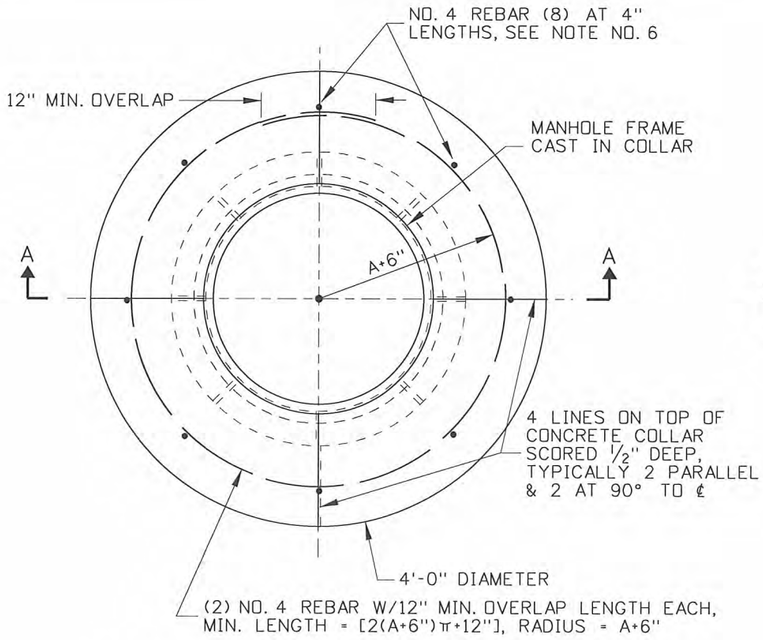

CONCRETE COLLAR PLAN

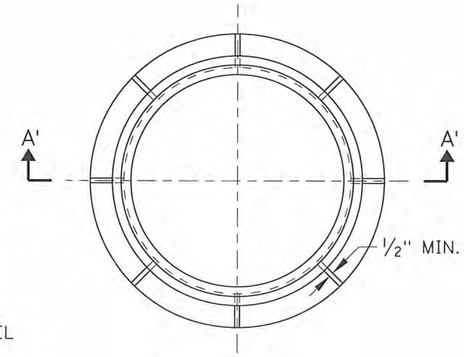

FRAME PLAN

COVER PLAN - TOP HALF VIEW

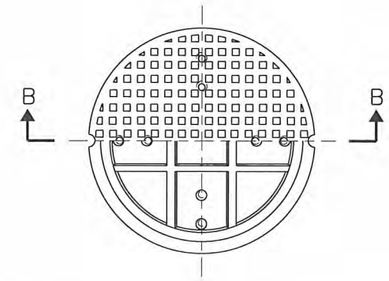

COVER PLAN - BOTTOM HALF VIEW

STANDARD MANHOLE FRAME BASIC DIMENSIONS	
A	24 1/8"
B	1"
C	21" MIN.
D	31" MIN.
E	5"
STANDARD MANHOLE COVER BASIC DIMENSIONS	
A'	23 7/8"
* B'	1"
C'	20"

* B' MANHOLE FRAME BOTTOM TO FIT INSIDE ANOTHER FRAME LID OPENING

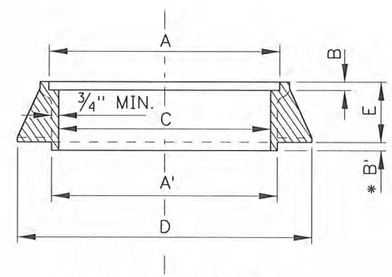

SECTION A'-A'

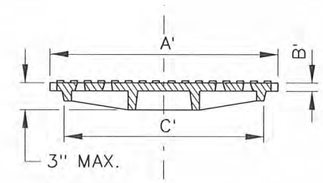

SECTION B-B

NOTES

1. THE MINIMUM WEIGHT OF THE FRAMES SHALL BE 150LBS. AND THE MINIMUM WEIGHT OF COVERS SHALL BE 110LBS. THESE FRAMES AND COVERS ARE TO BE USED IN ALL TRAFFIC AND NON-TRAFFIC AREAS.

2. FRAMES AND COVERS SHALL CONFORM TO AASHTO M 306-05 AND SHALL BE MADE OF CLASS 35B GRAY IRON.

3. THE LAYOUT AND DIMENSIONS OF THE WEBS ARE TYPICAL MINIMUMS. PROPRIETARY MANHOLE COVERS WITHOUT WEBS ARE ACCEPTABLE PROVIDED THEY MEET AASHTO M 306-05 AND MINIMUM WEIGHT REQUIREMENTS. ALL COVER DESIGNS SHALL BE PROVIDED WITH AN ANTI-SHIFT SKIRT THAT EXTENDS A MINIMUM OF 1" BELOW THE COVER SEAT.

4. THE SURFACE SHOWN IS FOR ILLUSTRATION ONLY. ANY SURFACE DESIGN, OTHER THAN SMOOTH, MAY BE USED UPON APPROVAL.

5. A CAST-IN-PLACE CONCRETE COLLAR SHALL BE PLACED AROUND THE MANHOLE FRAME UNLESS OTHERWISE DIRECTED. THE CONCRETE COLLAR SHALL MEET THE REQUIREMENTS OF SECTION 609 - MINOR STRUCTURES, OF THE CURRENT ITD STANDARD SPECIFICATIONS FOR HIGHWAY CONSTRUCTION.

6. THE CONCRETE COLLAR SHALL BE PLACED TO THE TOP OF THE MANHOLE/STRUCTURE OR HAVE A MINIMUM THICKNESS OF 9". WHEN THE CONCRETE COLLAR IS PLACED ON TOP OF A MANHOLE/STRUCTURE THE THICKNESS SHALL NOT BE LESS THAN THE "F DIMENSION" OF THE FRAME. THE VERTICAL METAL REINFORCEMENT LENGTHS MAY BE ADJUSTED WHEN THE COLLAR IS PLACED ON TOP OF A STRUCTURE/MANHOLE.

7. USE OF A PLASTIC MANHOLE FRAME SUPPORT, I.E. WHIRLY-GIG OR COMPARABLE DEVICE, IS AN ACCEPTABLE CONSTRUCTION OPTION.

8. NOT TO SCALE.

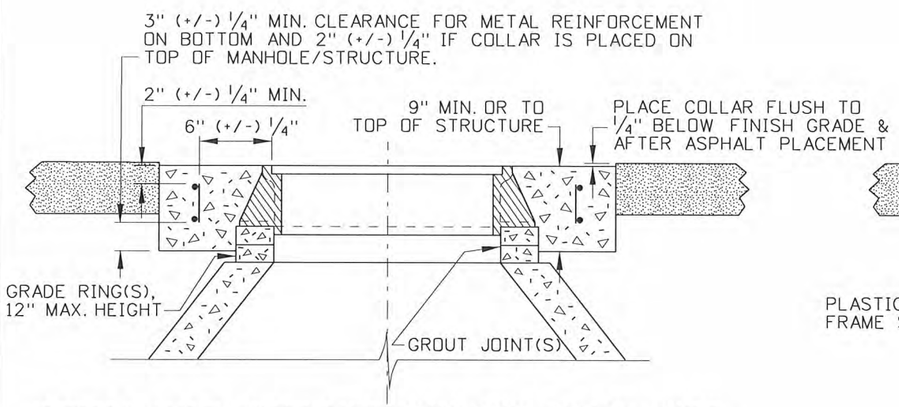

MANHOLE FRAME SUPPORTED WITH CONC. COLLAR RINGS
(SEE NOTE NO. 6)

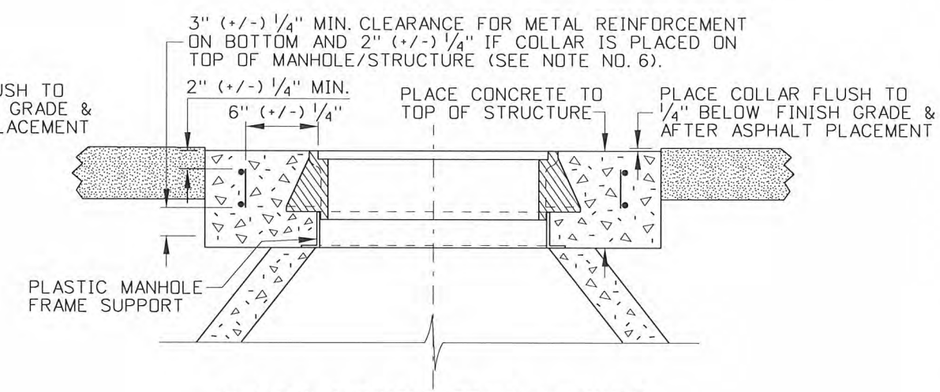

PLASTIC MANHOLE FRAME SUPPORT
(SEE NOTE NO. 7)

SECTION A-A

REVISIONS								
NO.	DATE	BY	NO.	DATE	BY	NO.	DATE	BY
1	6-61	NS	6	10-05	MSM			
2	2-74		7	6-07	MSM			
3	12-92	MSM	8	9-10	PLR			
4	5-95	MSM						
5	11-01	MSM						

SCALES SHOWN ARE FOR 11" X 17" PRINTS ONLY

CADD FILE NAME: e9__1010.std

DRAWING DATE: JUNE, 1961

IDAHO TRANSPORTATION DEPARTMENT

BOISE IDAHO

ASSISTANT CHIEF ENGINEER (DEVELOPMENT)

CHIEF ENGINEER

STANDARD DRAWING

STANDARD MANHOLE FRAME, COVER, & CONCRETE COLLAR

English

STANDARD DRAWING NO.

E-9

SHEET 1 OF 1

PROFESSIONAL ENGINEER REGISTERED 6506 10/26/2010 STATE OF IDAHO TED E. MASON

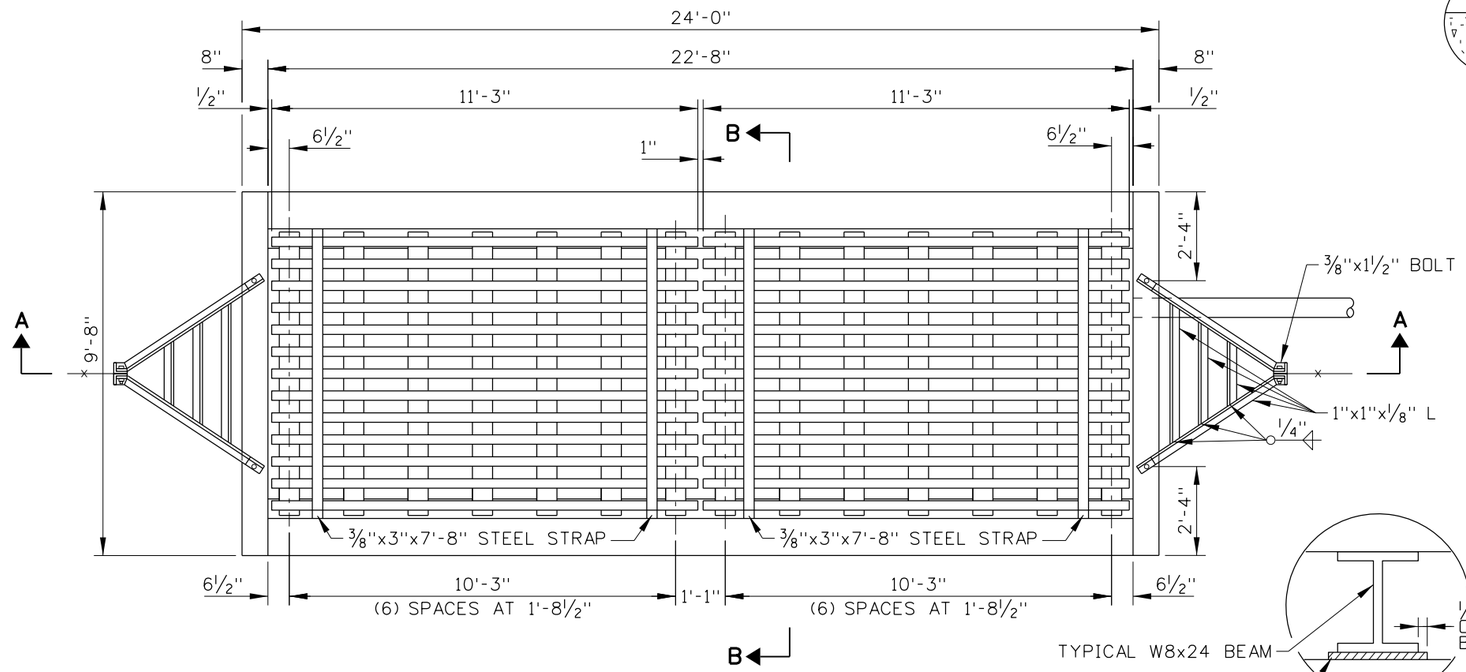

PLAN

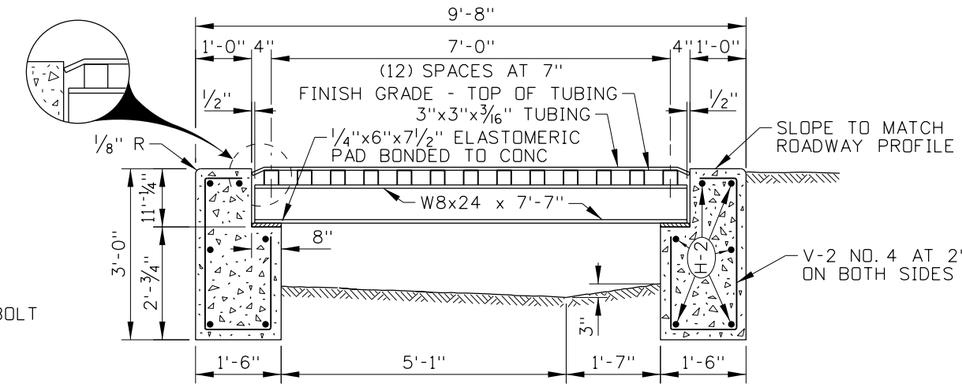

SECTION B-B

REINFORCEMENT STEEL				
MARK	LOCATION	SIZE NO.	BAR LENGTH	NO. REQ'D
V-1	END WALLS	4	2'-8"	18
V-2	SIDE WALLS	4	6'-0"	11
H-1	END WALLS	4	9'-4"	6
H-2	SIDE WALLS (TIE BARS)	4	23'-8"	12
454 LIN. FT. NO.4 BARS @ 0.668 LB./FT.= 304 LB.				

BILL OF MATERIALS	
CONCRETE, CLASS 30	8.2 C.Y.
METAL REINFORCEMENT	304 LBS
STRUCTURAL STEEL	4600 LBS

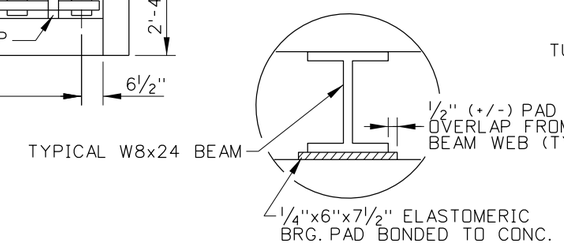

PAD DETAIL

(SEE NOTE NO. 3)

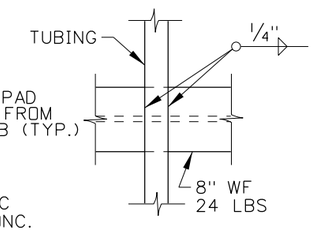

TYPICAL WELD DETAIL

NOTES

1. ENSURE THAT CATTLE GUARD MEETS THE REQUIREMENTS OF SECTION 611 - CATTLE GUARDS OF THE STANDARD SPECIFICATIONS FOR HIGHWAY CONSTRUCTION.
2. ENSURE THAT THE EXPOSED STEEL SURFACES ARE BLASTED CLEAN TO AN SSPC SP-10 AND PAINTED WITH PAINT SYSTEM D IN ACCORDANCE WITH SECTION 627 - PAINTING OF THE STANDARD SPECIFICATIONS FOR HIGHWAY CONSTRUCTION.
3. ENSURE THAT THE CATTLE GUARD AND SUPPORTS ARE DESIGNED FOR HS-25 LOADING. ENSURE THAT THE ELASTOMERIC BEARING PADS ARE 50 DUROMETER IN HARDNESS.
4. PLACE THE CATTLE GUARD ON BASE AGGREGATE, 3" MINIMUM THICKNESS OVER HAND LEVELED SOIL COMPACTED TO 95% DENSITY.
5. GALVANIZE CATTLE GUARD HARDWARE FASTENERS.
6. GRADE TO DRAIN.
7. PLACE THE CATTLE GUARD TO MATCH THE ROADWAY SLOPE, CROWN, OR BOTH.
8. ALTERNATE CATTLE GUARD DESIGNS MAY BE USED. PRIOR APPROVAL, BY THE ENGINEER, OF SHOP DRAWINGS IS REQUIRED FOR THE USE OF ALTERNATE CATTLE GUARDS.
9. NOT TO SCALE.

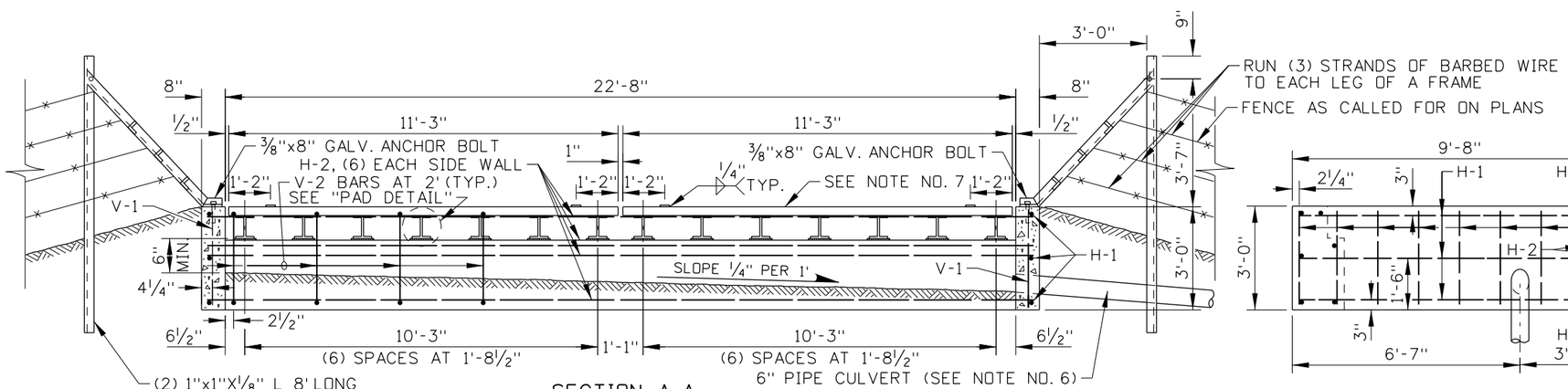

SECTION A-A

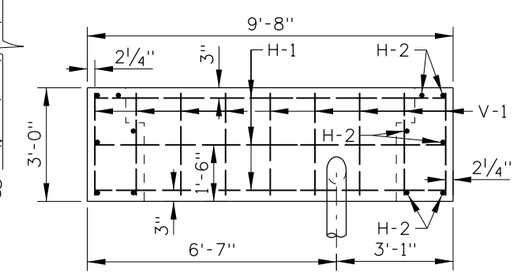

END VIEW

REVISIONS								
NO.	DATE	BY	NO.	DATE	BY	NO.	DATE	BY
1	12-72		6	5-95	IJR	11	12-12	RDL
2	12-73		7	1-00	MSM			
3	2-74		8	9-02	MSM			
4	3-81		9	10-05	MSM			
5	6-81		10	08-11	RSC			

SCALES SHOWN ARE FOR 11" X 17" PRINTS ONLY

CADD FILE NAME: flo_1212.std

DRAWING DATE: JANUARY, 1971

IDAHO TRANSPORTATION DEPARTMENT

BOISE IDAHO

ORIGINAL SIGNED BY: LOREN THOMAS
HIGHWAYS PROGRAM OVERSIGHT ENGINEER

ORIGINAL SIGNED BY: TOM COLE
CHIEF ENGINEER

STANDARD DRAWING

CATTLE GUARD TYPE A

English

STANDARD DRAWING NO.

F-1-A

SHEET 1 OF 1

ORIGINAL STORED AT: ITD. Headquarters 3311 West State Boise, Idaho

ORIGINAL SIGNED BY: RYAN D. LANCASTER
DATE ORIGINAL SIGNED: DECEMBER 17, 2012

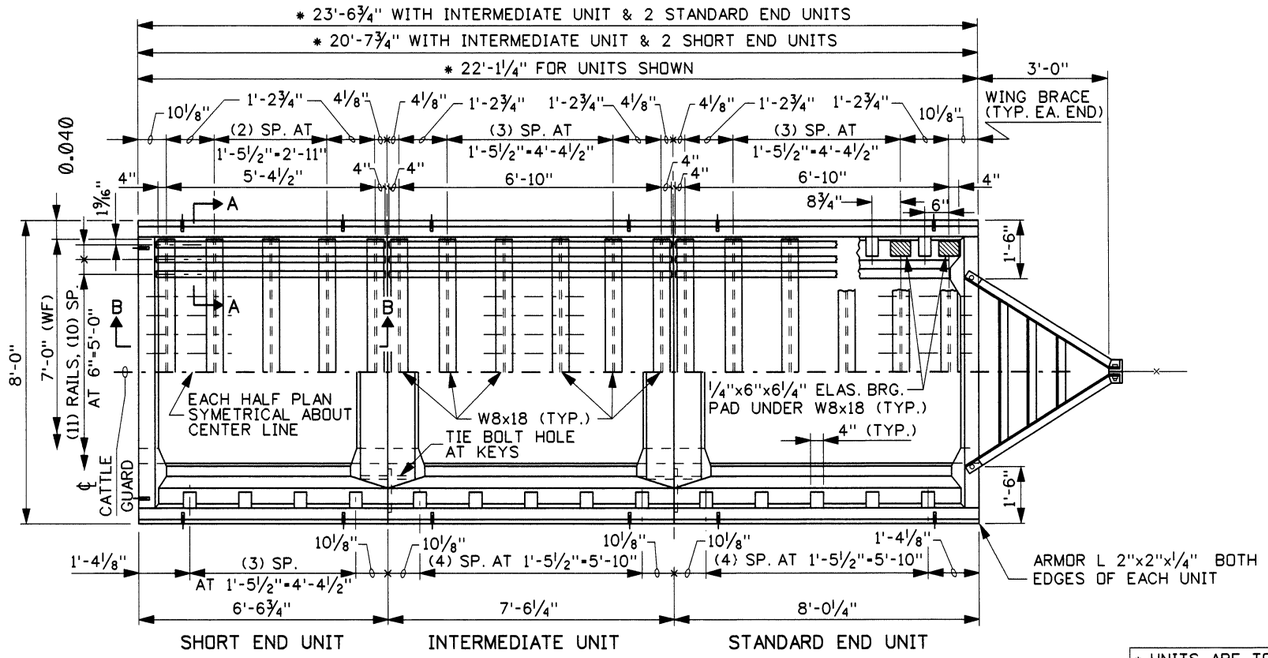

PART PLAN - CONCRETE, RAILS & RAIL SUPPORTS

* UNITS ARE TO BE FURNISHED AS REQUIRED BY THE SPECIFIED CATTLE GUARD WIDTH.

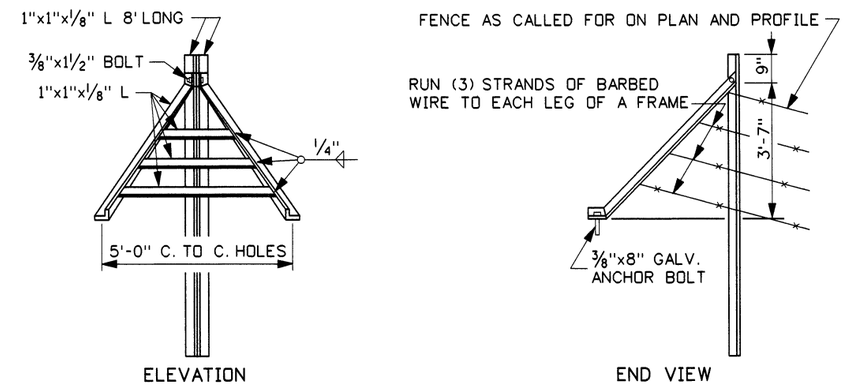

WING BRACE

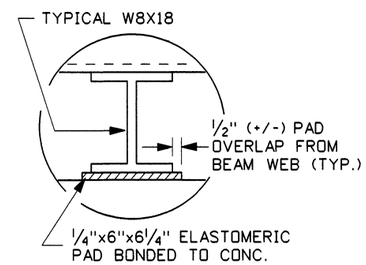

PAD DETAIL

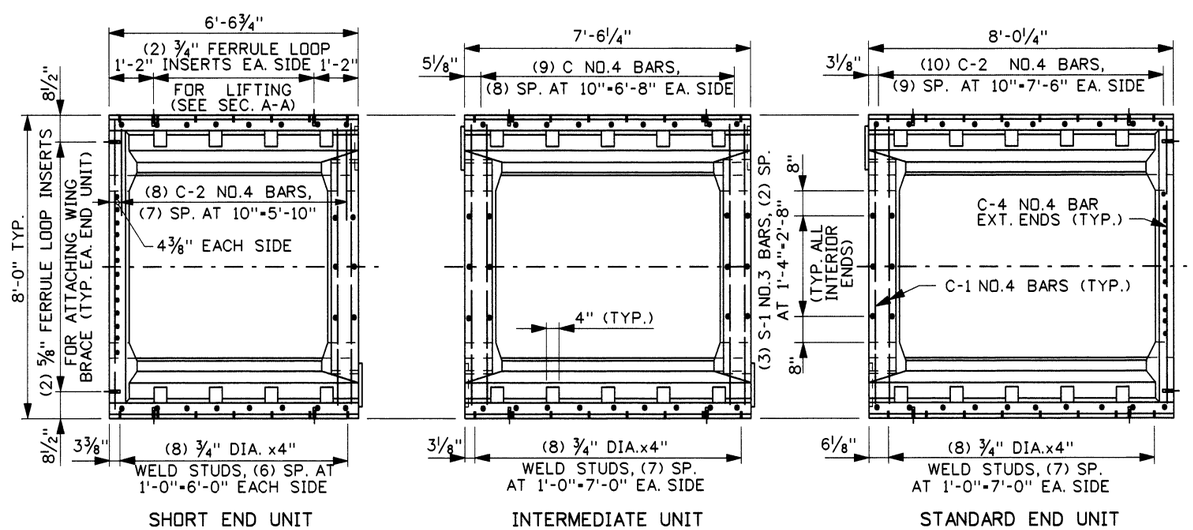

PLAN - WELD STUD, INSERT & METAL REINFORCEMENT PLACEMENT

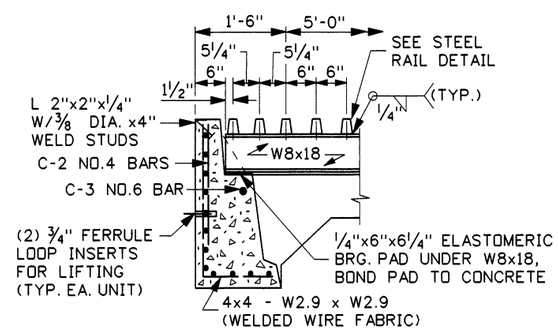

SECTION A-A

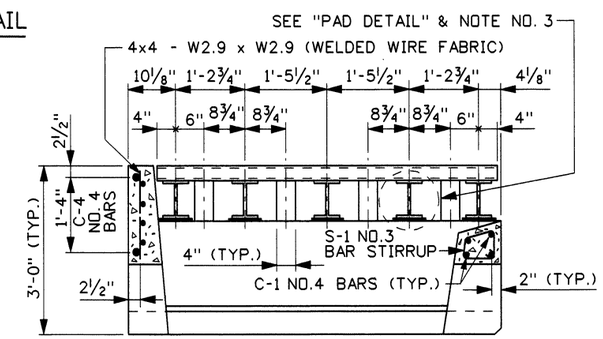

SECTION B-B

REVISIONS								
NO.	DATE	BY	NO.	DATE	BY	NO.	DATE	BY
1	7-02	MSM						
2	12-05	MSM						

SCALES SHOWN ARE FOR 11" X 17" PRINTS ONLY

CADD FILE NAME f1b_1205.std

DRWG. ORIG. DATE: MARCH, 1981

IDAHO TRANSPORTATION DEPARTMENT

BOISE IDAHO

ASSISTANT CHIEF ENGINEER (DEVELOPMENT)

CHIEF ENGINEER

STANDARD DRAWING

CATTLE GUARD TYPE B

REQUIRES SHEET 2 OF 2

English

STANDARD DRWG. NO.

F-1-B

SHEET 1 OF 2

PROFESSIONAL ENGINEER * LAND SURVEYOR REGISTERED 2240 12/19/05 STATE OF IDAHO MILFORD MILLER

SUPPORT REINFORCEMENT TABLE								
MARK	BAR SIZE	NO. PER UNIT			LENGTH PER UNIT			SKETCH
		INTER. UNIT	STD. END	SHORT END	INTER. UNIT	STD. END	SHORT END	
C-1	NO. 4	8	4	4	7'-9"	7'-9"	7'-9"	
C-2	NO. 4	18	20	16	1'-9"	1'-9"	1'-9"	
C-3	NO. 6	2	2	2	7'-3"	7'-9"	6'-3"	
C-4	NO. 4	-	2	2	-	7'-9"	7'-9"	
S-1	NO. 3	6	3	3	1'-9 5/8"	1'-9 5/8"	1'-9 5/8"	
W.W.F.	4x4-W2.9xW2.9	2	2	2	4'-0"x7'-3"	4'-0"x7'-9"	4'-0"x6'-3"	
W.W.F.	4x4-W2.9xW2.9	-	1	1	-	1'-6"x7'-9"	1'-6"x7'-9"	135° HOOKS

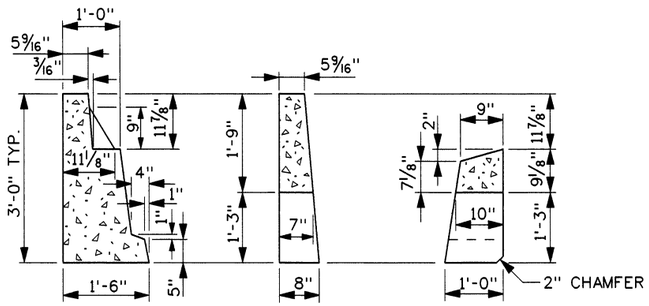

THE SECTIONS THRU SUPPORT WALLS GIVE DIMENSIONS FOR FORMING. SEE SECTIONS A-A & B-B ON PLAN VIEW ORENTATION.

SUPPORT DIMENSIONS

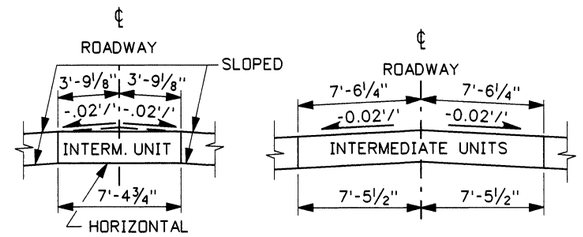

TWO TYPES OF COMBINATIONS OF BEVELED INTERMEDIATE UNITS

ROADWAY SECTIONS

STRUCTURAL STEEL TABLE							
MARK	SIZE	NO. PER UNIT			LENGTH PER UNIT		
		INTER. UNIT	STD. END	SHORT END	INTERMED. UNIT	STANDARD END UNIT	SHORT END UNIT
WIDE FLG.	W8x18	6	6	5	7'-0"	7'-0"	7'-0"
RAIL	SEE D.	15	15	15	7'-6"	7'-6"	6'-0 1/2"
WELDSTUD	3/8" DIA.	16	16	14	4"	4"	4"
ARMOR L	2x2x1/4"	2	2	2	7'-6 1/4"	8'-6 1/4"	6'-6 3/4"
WING BRACE							
ANGLE	1x1x1/8"	WING FRAME			4 REQ'D	21'-1" TOTAL	
ANGLE	1x1x1/8"	WING FILLER			6 REQ'D	16'-6" TOTAL	
POST L	1x1x1/8"	WING SUPPORT			4 REQ'D	VARIES APPR. 8'-0"	
PLATE	3x5 1/2x1/8	WING FRAME TIE			2 REQ'D	TOTAL L = 37'-9"	

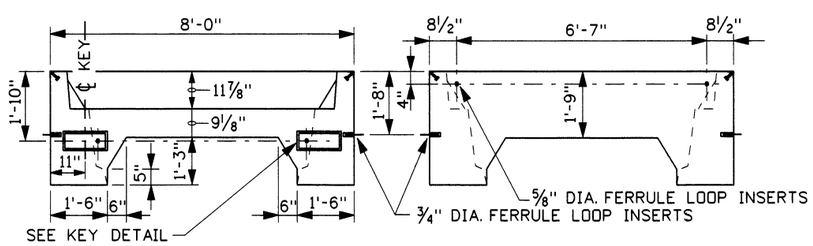

TYPICAL VIEW OF INTERIOR END

TYPICAL VIEW OF INTERIOR END

END VIEWS

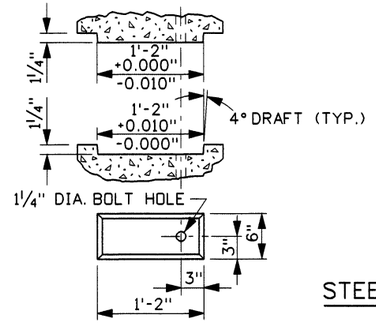

KEY DETAILS

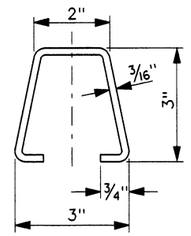

STEEL RAIL DETAIL

NOTES

1. THE ABOVE SECTIONS SHOW REINFORCEMENT, RAIL, AND RAIL SUPPORT PLACEMENT ONLY.
2. ALL CATTLE GUARDS SHALL MEET THE REQUIREMENTS OF SECTION 611 - CATTLE GUARDS OF THE STANDARD SPECIFICATIONS.
3. THE CATTLE GUARD AND SUPPORTS SHALL BE DESIGNED FOR HS-25 LOADING. THE ELASTOMERIC BEARING PADS SHALL BE 50 DUROMETER IN HARDNESS.
4. THE CATTLE GUARD SHALL BE PLACED ON BASE AGGREGATE 3" MIN. THICKNESS OVER HAND LEVELED SOIL COMPACTED TO 95% DENSITY.
5. CATTLE GUARD EXPOSED STEEL MEMBERS AND HARDWARE SHALL BE GALVANIZED.
6. DRAINAGE SHALL BE PROVIDED AT THE TIME OF INSTALLATION SO THE CATTLE GUARD WILL DRAIN.
7. THE CATTLE GUARD SHALL BE PLACED TO MATCH THE ROADWAY SLOPE AND/OR THE CROWN.
8. COMMERCIAL OR ALTERNATE CATTLE GUARD DESIGNS MAY BE USED UPON MEETING THE ABOVE REQUIREMENTS.
9. ALL DETAILS SHOWN ARE NOT DRAWN TO ANY SCALE.
10. NOT TO SCALE.

REVISIONS								
NO.	DATE	BY	NO.	DATE	BY	NO.	DATE	BY
1	7-02	MSM						
2	12-05	MSM						

SCALES SHOWN ARE FOR 11" X 17" PRINTS ONLY

CADD FILE NAME f1b_1205.std

DRWG. ORIG. DATE: MARCH, 1981

IDAHO TRANSPORTATION DEPARTMENT

BOISE IDAHO

ASSISTANT CHIEF ENGINEER (DEVELOPMENT)

CHIEF ENGINEER

STANDARD DRAWING

CATTLE GUARD TYPE B

REQUIRES SHEET 1 OF 2

English

STANDARD DRWG. NO.

F-1-B

SHEET 2 OF 2

PROFESSIONAL ENGINEER * LAND SURVEYOR REGISTERED 2240 12/19/05 STATE OF IDAHO MILFORD MILLER

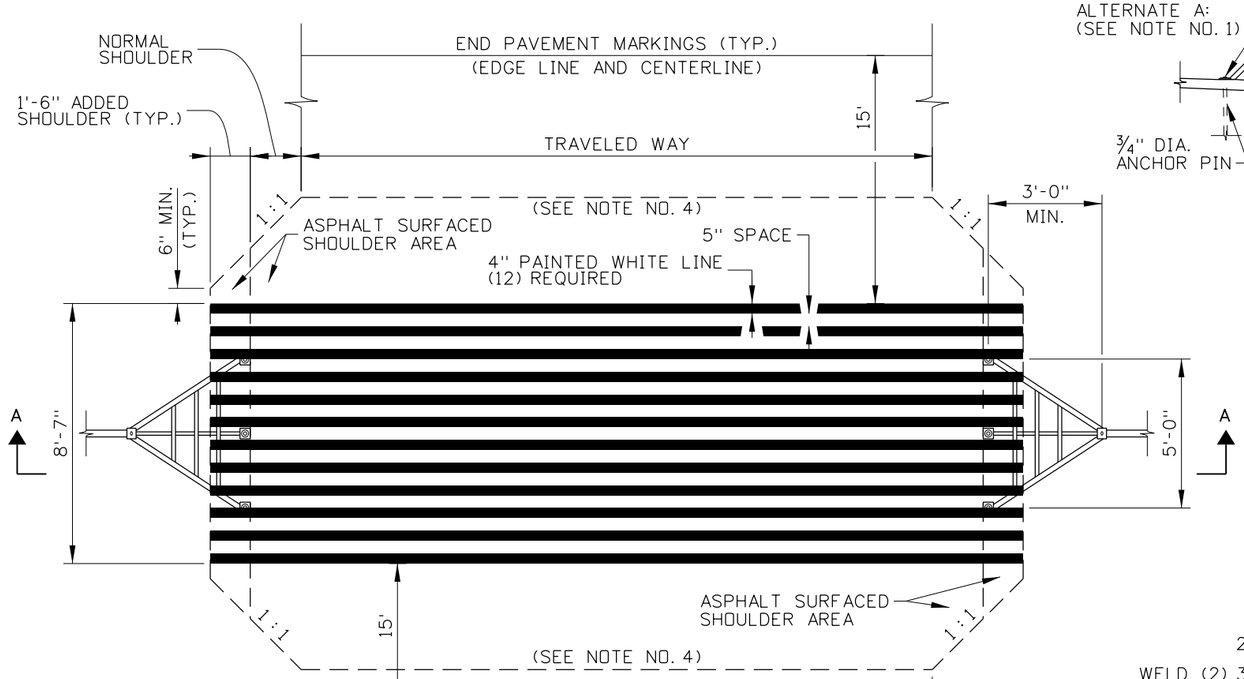

PLAN

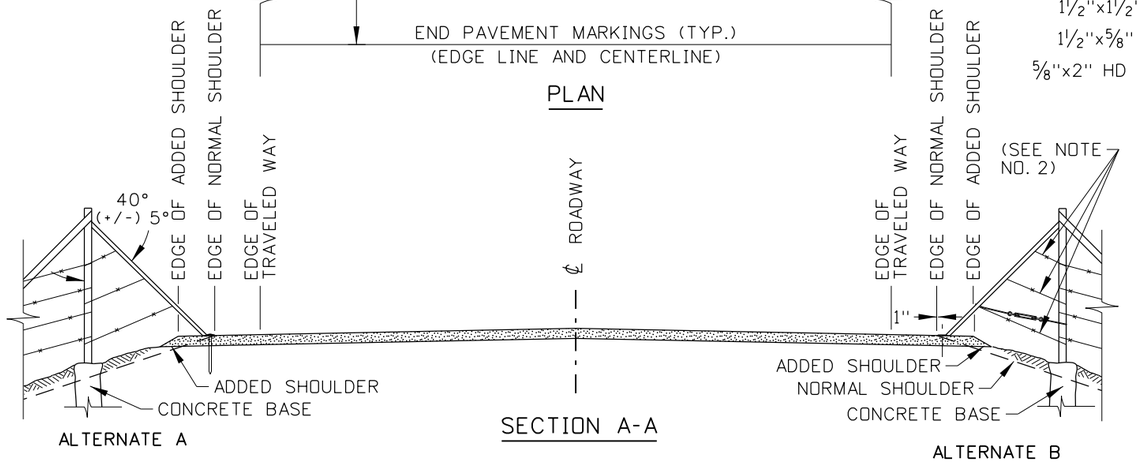

SECTION A-A

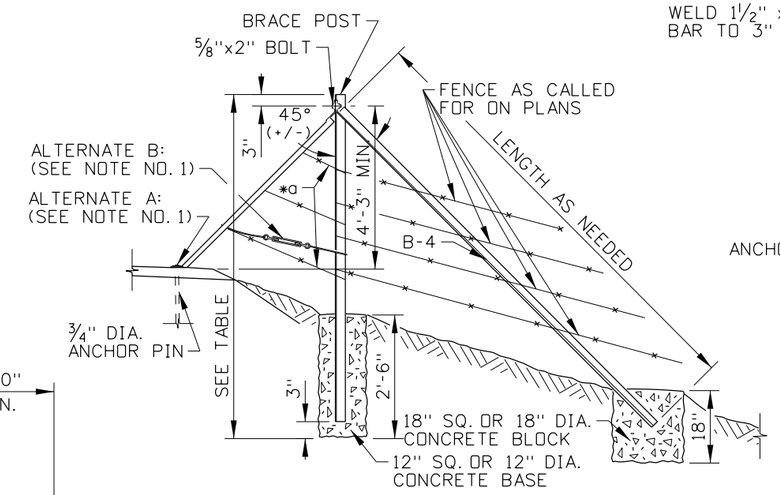

SIDE VIEW

* a (SEE NOTE NO. 3)

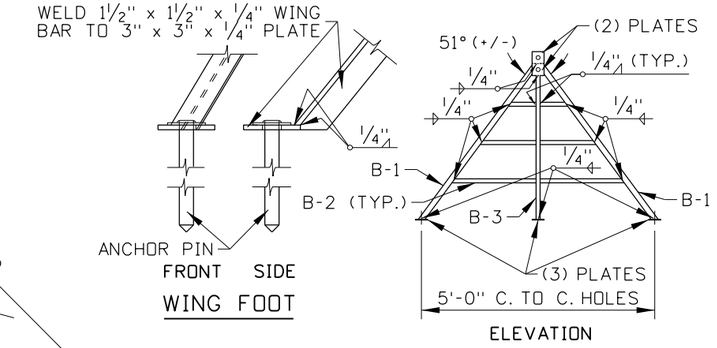

WING FOOT

ELEVATION

WING BRACE DETAILS

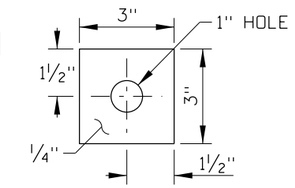

PLATE

(5) REQUIRED FOR EACH WING

MATERIALS TABLE				
BAR	NUMBER OF BARS	TYPE	* b LENGTH(S)	BAR SIZES IN INCHES
B-1	2	∠	5'-8"	1 1/2x1 1/2x1/4
B-2	3	∠	1'-6", 2'-8", & 3'-10"	1x1x1/8
B-3	1	FLAT	5'-0"	1x1/4
B-4	1	∠	VARIES	2x2x1/4
POST	1	∠	8'-0"	2 1/2x2 1/2x1/4
PLATE	5	FLAT	3" LENGTHS OR DIA.	3"x3"x1/4
PIN	2	ROUND	* c 18"/24"	3/4 DIA,

* b (SEE NOTE NO. 3)
* c (SEE NOTE NO. 1, ALT. A)

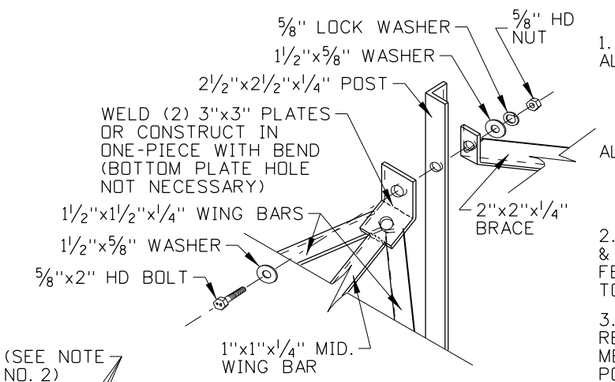

BOLTING DIAGRAM

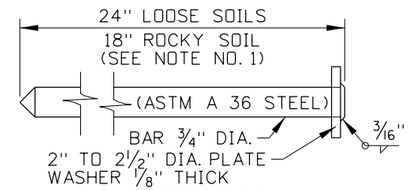

ANCHOR PIN

(3) REQUIRED FOR EACH WING

NOTES

1. SECURE CATTLE GUARD WINGS TO PAVEMENT.
ALTERNATE A:
DRIVE (3) 3/4" DIA. ANCHOR PINS THROUGH WING FEET PLATE HOLES INTO 1" PRE ROTO-DRILLED HOLES IN THE ASPHALT OR CONCRETE PAVEMENT. DRIVE THE ANCHOR PIN HEAD FLUSH TO THE WING FOOT. THE ANCHOR PIN LENGTH MAY BE ADJUSTED FOR THE SOIL TYPE.
ALTERNATE B:
PLACE A 3/8" TURNBUCKLE FASTENED WITH MIN. 10 GAUGE WIRE BETWEEN THE WING CENTER MEMBER AND THE BRACE POST. TIGHTEN TURNBUCKLE TO PRESS WING FEET TO ROADWAY PAVEMENT.

2. TIE A MINIMUM OF (3) WIRES FROM THE BRACE POST TO THE WING B-2 & B-3 BAR INTERSECTIONS FOR BARBED WIRE INSTALLATIONS. MESH WIRE FENCES WILL REQUIRE A SECTION OF WIRE MESH TIED FROM THE B-2 BAR TO THE BRACE POST.

3. WHEN RETROFITTING AN EXISTING CATTLE GUARD INSTALLATION, REPLACE THE BRACE POST AND B-4 MEMBERS. PROVIDE LONGER WING BAR MEMBERS WHEN THE DISTANCE FROM THE ROADWAY SHOULDER TO THE POST EXCEEDS 3'-0", THE POST HEIGHT EXCEEDS 4'-3", OR BOTH.

4. PAVE THE AREA BETWEEN THE CATTLE GUARD WINGS AND THE 1 : 1 TAPER. THE PAINTED CATTLE GUARD CAN BE PLACED ON A GRAVEL SURFACE ROADWAY IF THE MARKED AREA IS PAVED AS SHOWN.

5. THE PAINTED CATTLE GUARD MARKINGS ARE PAINTED WITH ITD FORMULA NO. 14 OR OTHER MARKINGS AS APPROVED BY THE ENGINEER.

6. ALL THE EXPOSED STEEL SURFACES BELONGING TO THE CATTLE GUARD WINGS SHALL BE GALVANIZED.

7. NOT TO SCALE.

ORIGINAL STORED AT: ITD, Headquarters 3311 West State Boise, Idaho

ORIGINAL SIGNED BY: RYAN D. LANCASTER DATE ORIGINAL SIGNED: DECEMBER 17, 2012

REVISIONS								
NO.	DATE	BY	NO.	DATE	BY	NO.	DATE	BY
1	8-04	MSM						
2	10-05	MSM						
3	12-12	RDL						

SCALES SHOWN ARE FOR 11" X 17" PRINTS ONLY

CADD FILE NAME: f1c_1212.std

DRAWING DATE: JANUARY, 2004

IDAHO TRANSPORTATION DEPARTMENT

BOISE IDAHO

ORIGINAL SIGNED BY: LOREN THOMAS
HIGHWAYS PROGRAM OVERSIGHT ENGINEER
ORIGINAL SIGNED BY: TOM COLE
CHIEF ENGINEER

STANDARD DRAWING

CATTLE GUARD TYPE C
PAINTED CATTLE GUARD

English

STANDARD DRAWING NO.

F-1-C

SHEET 1 OF 1

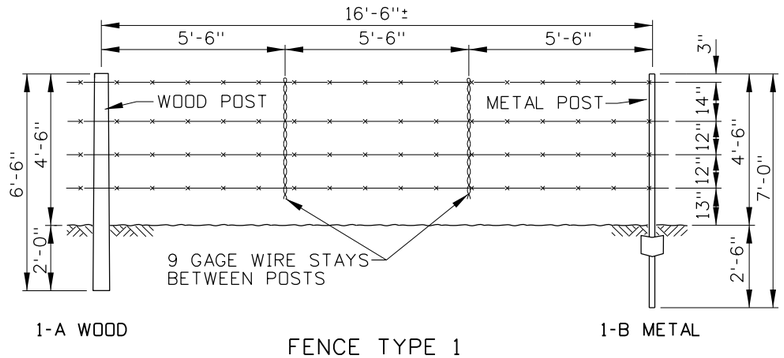

FENCE TYPE 1

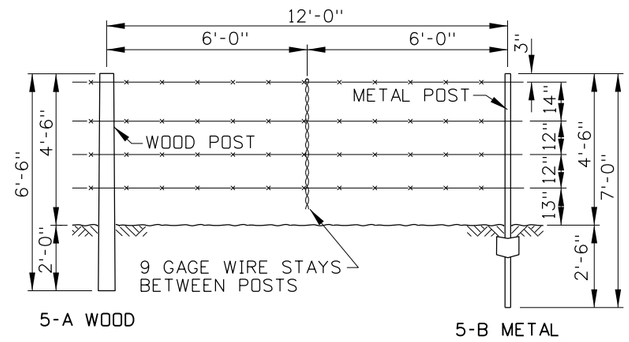

FENCE TYPE 5

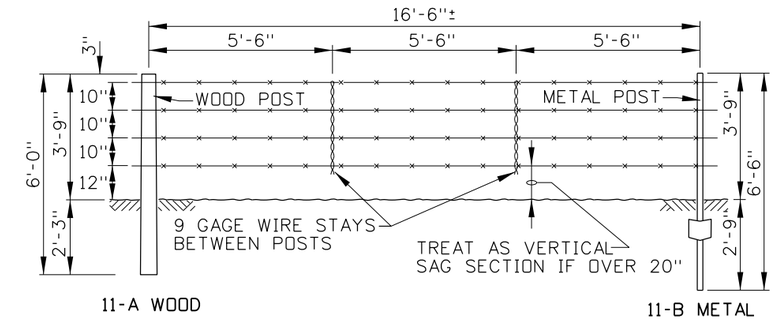

FENCE TYPE 11

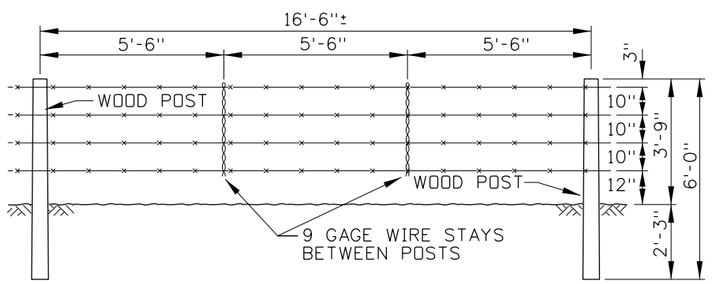

DROP FENCE TYPE 6

(SEE WOOD POST STAPLE DETAIL, SHEET 2 OF 3)

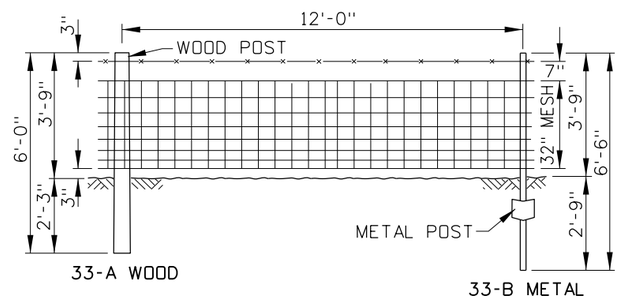

FENCE TYPE 33

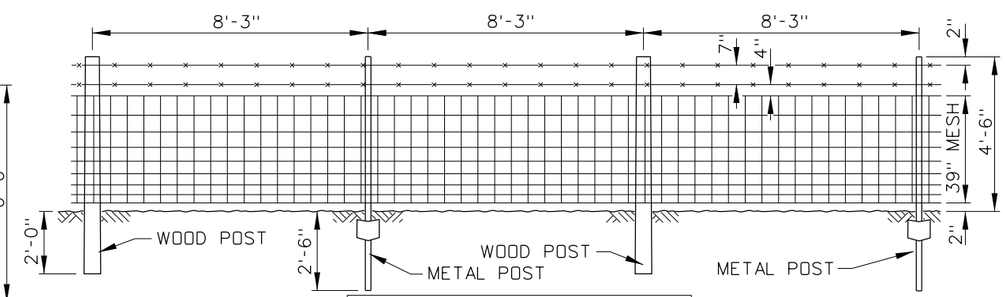

ALTERNATE WOOD & METAL POSTS

FENCE TYPE 2

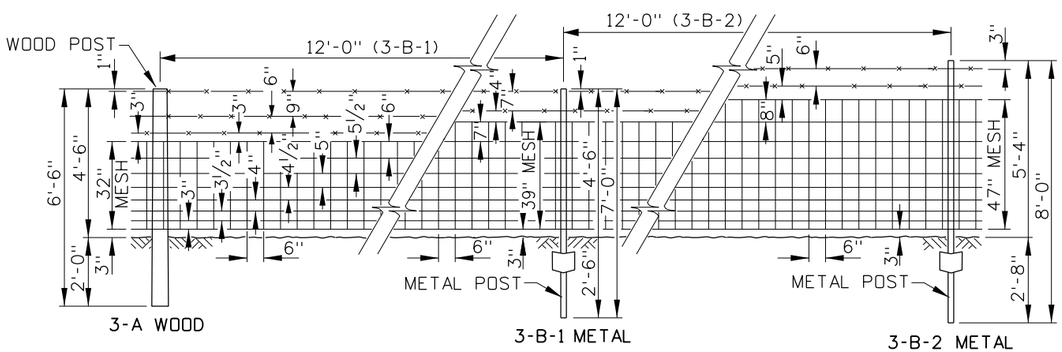

FENCE TYPE 3 WILL HAVE THE MESH HT. SHOWN AFTER THE POST MATERIAL SUFFIX i.e., TYPE 3-A (32"), OR TYPE 3-B-1 (39"), TYPE 3-B-2 (47").

FENCE TYPE 3

WRAP THE TIE WITH 11 GAGE WIRE, ONE WRAP PER EACH 6" OF MESH SECTION. OTHER METHODS MAY BE USED WITH PRIOR APPROVAL OF THE ENGINEER.

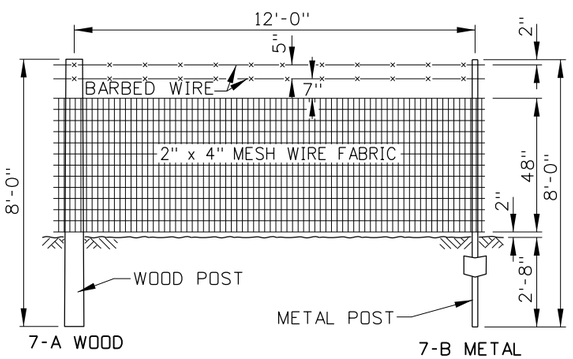

FENCE TYPE 7

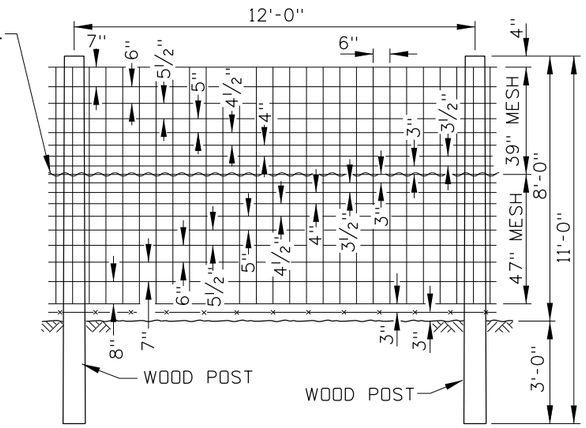

DEER PROOF FENCE TYPE 8

ORIGINAL STORED AT: ITD, Headquarters 3311 West State Boise, Idaho

ORIGINAL SIGNED BY: RYAN D. LANCASTER DATE ORIGINAL SIGNED: DECEMBER 17, 2012

REVISIONS

NO.	DATE	BY	NO.	DATE	BY	NO.	DATE	BY
16	9-10	PLR	6	3-80		11	1-97	MSM
17	12-12	RDL	7	7-84		12	11-00	MSM
3	2-74		8	5-90	GB	13	11-01	MSM
4	2-77		9	12-92	MSM	14	5-04	MSM
5	1-78		10	9-93	MSM	15	10-04	MSM

SCALES SHOWN ARE FOR 11" X 17" PRINTS ONLY

CADD FILE NAME: f2a_1212.std

DRAWING DATE: FEBRUARY, 1973

IDAHO TRANSPORTATION DEPARTMENT

BOISE IDAHO

ORIGINAL SIGNED BY: LOREN THOMAS
HIGHWAYS PROGRAM OVERSIGHT ENGINEER
ORIGINAL SIGNED BY: TOM COLE
CHIEF ENGINEER

STANDARD DRAWING

STANDARD BARBED, WOVEN, MESH, COMBINATION WIRE FENCES, & FENCING DETAILS

REQUIRES SHEETS 2 OF 3 & 3 OF 3

English

STANDARD DRAWING NO.

F-2-A

SHEET 1 OF 3

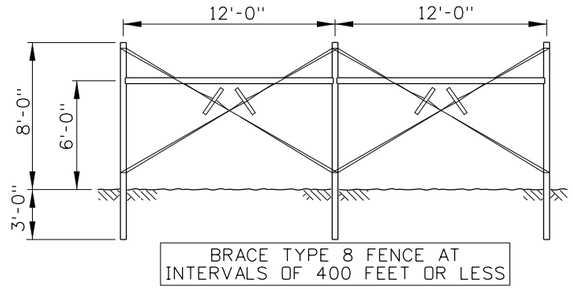

WOOD LINE BRACE FOR TYPE 8 FENCE

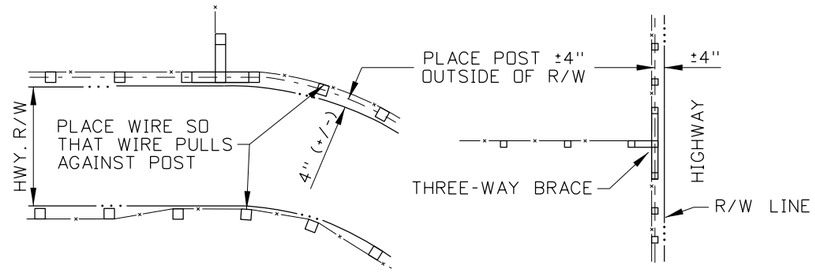

POST & WIRE LOCATION PLAN - FENCE TERMINAL

STANDARD APPROACH POLICY & PARTIAL CONTROL ACCESS

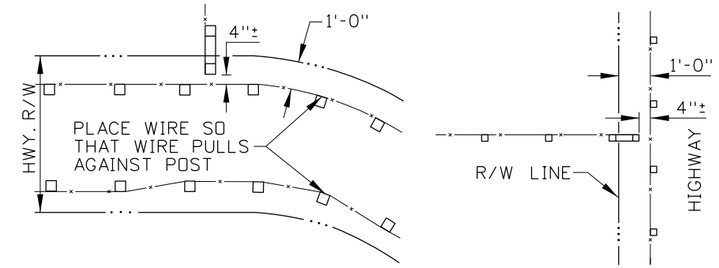

POST & WIRE LOCATION PLAN - FENCE TERMINAL

FULL CONTROL ACCESS

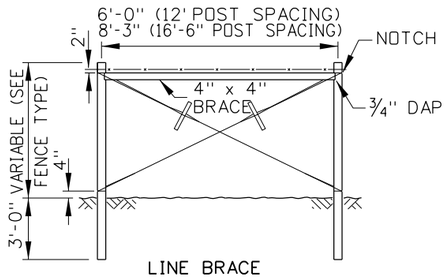

LINE BRACE

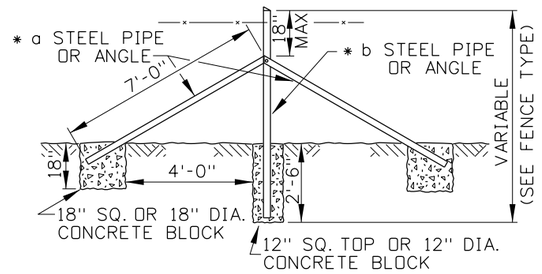

LINE BRACE

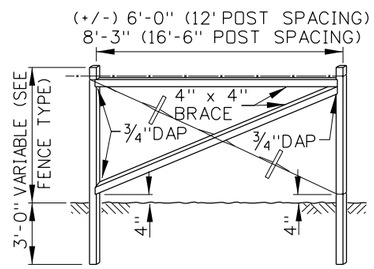

TERMINAL BRACE

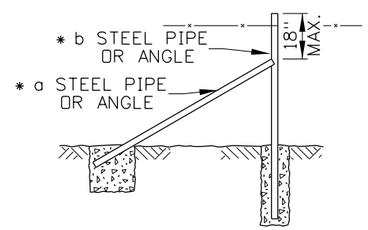

TERMINAL BRACE

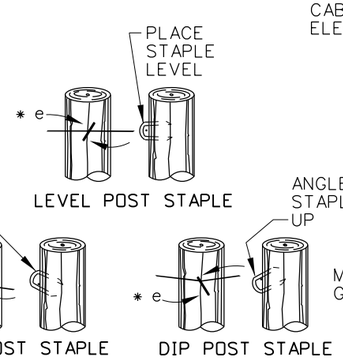

* e ROTATE STAPLE ON ALL POSTS TO STRADDLE ACROSS THE WOOD GRAIN & ALLOW ENOUGH SPACE FOR WIRE TO SLIDE THROUGH THE DRIVEN BACK OF THE STAPLE.

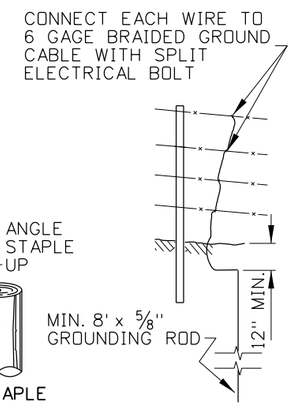

STRAND WIRE FENCES

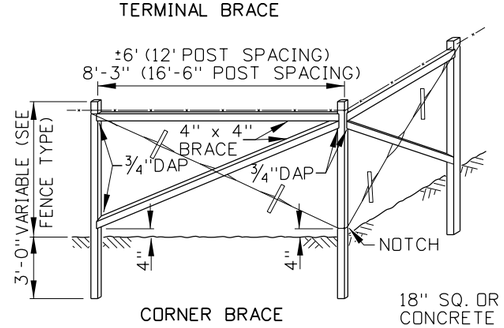

CORNER BRACE

WOOD BRACES

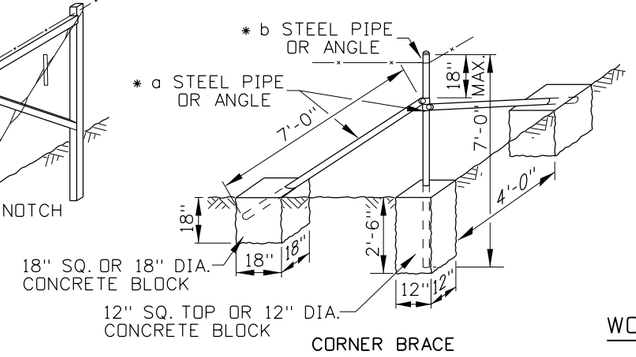

CORNER BRACE

* a 2" x 2" x 1/4" ANGLE OR 1.625" O.D. STD. STEEL PIPE BRACE.
* b 2 1/2" x 2 1/2" x 1/4" ANGLE OR 2.375" O.D. STD. STEEL PIPE POST.

METAL BRACES DETAILS

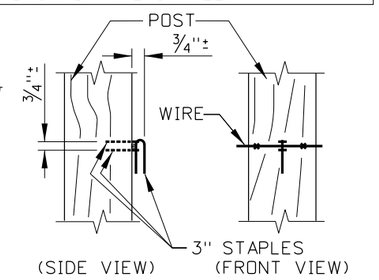

FOR DROP FENCE TYPE 6

WOOD POST STAPLEING DETAILS

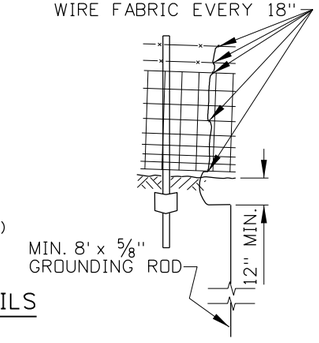

MESH WIRE FENCES

FENCE GROUNDING DETAILS

FENCE GROUNDING TABLE			
kV	* c GROUNDING INTERVAL	FENCE DISTANCE FROM TRANSMISSION ℄	FENCE TYPE
500	200'	0' - 100'	ALL
500	500'	100' - 200'	ALL
345	400'	0' - 100'	ALL
345	1000'	100' - 150'	ALL
>230	500'	50' - 100'	ALL
100-230	120'	WITHIN R/W	ALL
<100	NONE	WITHIN R/W	W/METAL POSTS
	1/4 Mi.	WITHIN R/W	W/WOOD POSTS
* c FENCE SECTIONS SHORTER THAN THE GROUNDING INTERVAL IN LENGTH SHALL BE GROUNDED ONCE.			

NOTES

1. WHEN A FENCE LINE APPROACHES A DITCH, GULLY, OR DEPRESSION, PLACE THE LAST POST ON LEVEL GROUND CLOSE ENOUGH TO THE EDGE OF THE DROP-OFF THAT THE WIRE MAY BE STRUNG TO A POST IN THE DEPRESSION WITHOUT TOUCHING THE GROUND.

2. WHEN THE DEPTH OF A DEPRESSION ON A TYPE 1, 5, OR 11 FENCE EXCEEDS THE TOTAL VERTICAL WIRE SPACING OVER A MAXIMUM HORIZONTAL RUN OF 2 FENCE SECTIONS, CONSTRUCT AN EXTRA FENCE SECTION THROUGH THE DEPRESSION. EXTRA LINE BRACES AND A DEADMAN ARE TO BE INCLUDED IN THIS APPLICATION. SEE THE SPECIAL APPLICATIONS FOR BARBED WIRE FENCES DETAIL.

3. WHEN A TYPE 1 GATE IS USED IN A SPECIAL APPLICATION FOR BARBED WIRE FENCES, AS SHOWN ON THE DETAIL, EXTRA LINE BRACES AND THE ATTACHED UNDER TIMBER, WIRE, AND WIRE STAYS ARE INCLUDED. THE HORIZONTAL WIRES ON THE UNDER TIMBER ARE NOT TO BE STAPLED BUT WRAPPED AROUND BRACE POST TWICE, THEN AROUND THE WIRE ITSELF.

4. THE SPECIAL APPLICATIONS FOR BARBED WIRE FENCES DETAIL MAY BE USED FOR WOVEN WIRE AND MESH WIRE FENCE TYPES 2, 3, 7, AND 33 WITH PRIOR APPROVAL BY THE ENGINEER OR AS SHOWN ON THE PLANS. A TYPE 2 GATE SHOULD BE USED WITH THESE FENCES. BARBED WIRE MAY BE USED THROUGH THE DEPRESSIONS OR FEATURE. HOWEVER, THE WIRES MUST MATCH THE WOVEN/MESH WIRE SPACING AS PRACTICABLE. DO NOT ATTACH THE UNDER TIMBER TO A TYPE 2 GATE.

5. WHEN WOOD BRACES ARE USED AND THE EXTERIOR FENCE CORNER ANGLE EXCEEDS 30°, USE DOUBLE PANELS ON THE CORNER BRACE. INSTALL DOUBLE PANELS FOR LINE AND TERMINAL BRACES IN ACCORDANCE WITH THE FENCE BRACE TABLE.

ORIGINAL STORED AT: ITD, Headquarters 3311 West State Boise, Idaho

ORIGINAL SIGNED BY: RYAN D. LANCASTER DATE ORIGINAL SIGNED: DECEMBER 17, 2012

REVISIONS								
NO.	DATE	BY	NO.	DATE	BY	NO.	DATE	BY
16	9-10	PLR	6	3-80		11	1-97	MSM
17	12-12	RDL	7	7-84		12	11-00	MSM
3	2-74		8	5-90	GB	13	11-01	MSM
4	2-77		9	12-92	MSM	14	5-04	MSM
5	1-78		10	9-93	MSM	15	10-04	MSM

SCALES SHOWN ARE FOR 11" X 17" PRINTS ONLY

CADD FILE NAME: f2a_1212.std

DRAWING DATE: FEBRUARY, 1973

IDAHO TRANSPORTATION DEPARTMENT

BOISE IDAHO

ORIGINAL SIGNED BY: LOREN THOMAS
HIGHWAYS PROGRAM OVERSIGHT ENGINEER
ORIGINAL SIGNED BY: TOM COLE
CHIEF ENGINEER

STANDARD DRAWING

STANDARD BARBED, WOVEN, MESH, COMBINATION WIRE FENCES, & FENCING DETAILS

REQUIRES SHEETS 1 OF 3 & 3 OF 3

English

STANDARD DRAWING NO.

F-2-A

SHEET 2 OF 3

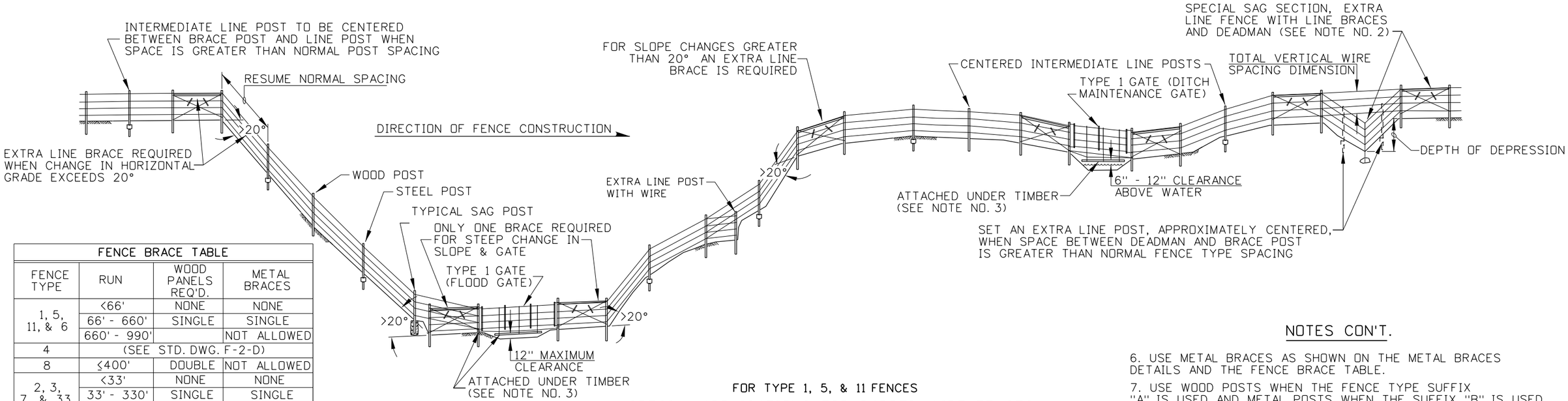

FOR TYPE 1, 5, & 11 FENCES

SPECIAL APPLICATIONS FOR BARBED WIRE FENCES

FENCE BRACE TABLE			
FENCE TYPE	RUN	WOOD PANELS REQ'D.	METAL BRACES
1, 5, 11, & 6	<66'	NONE	NONE
	66' - 660'	SINGLE	SINGLE
	660' - 990'		NOT ALLOWED
4	(SEE STD. DWG. F-2-D)		
8	≤400'	DOUBLE	NOT ALLOWED
2, 3, 7, & 33	<33'	NONE	NONE
	33' - 330'	SINGLE	SINGLE
	330' - 660'	DOUBLE	NOT ALLOWED

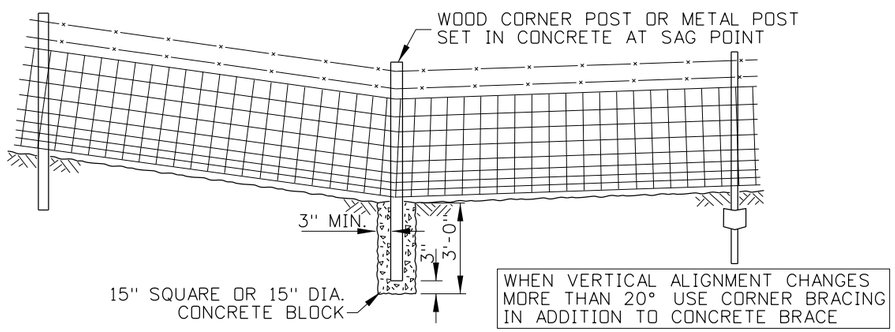

TYPICAL SAG SECTION FOR WOVEN WIRE, MESH, OR COMBINATION FENCES

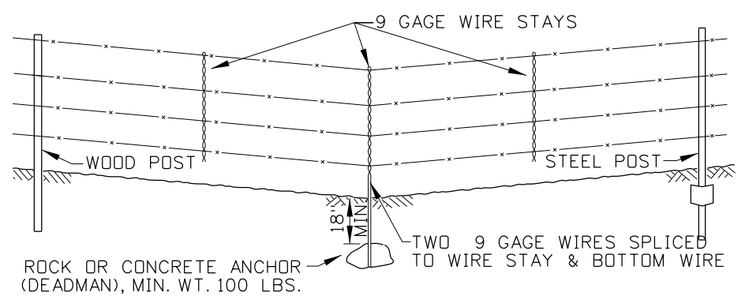

TYPICAL SAG SECTION - BARBED WIRE FENCES

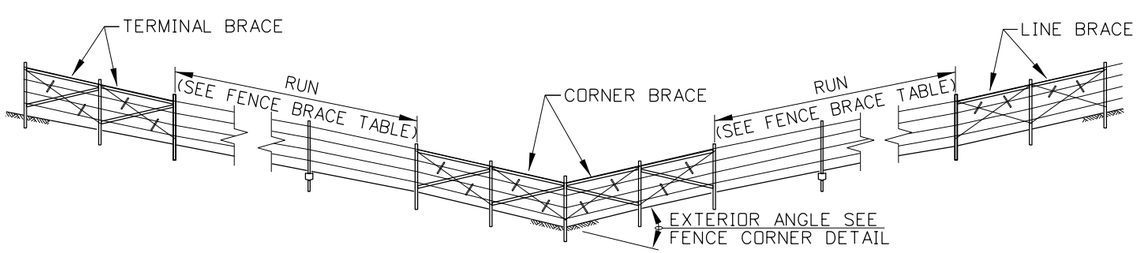

DOUBLE BRACE PANELS

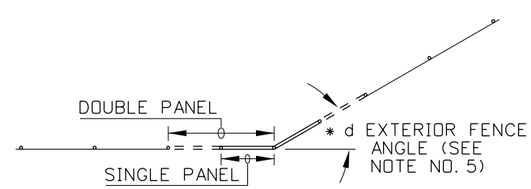

* d 30° OR LESS, SINGLE CORNER PANELS
MORE THAN 30°, DOUBLE CORNER PANELS

FENCE CORNER ANGLE

NOTES CON'T.

6. USE METAL BRACES AS SHOWN ON THE METAL BRACES DETAILS AND THE FENCE BRACE TABLE.

7. USE WOOD POSTS WHEN THE FENCE TYPE SUFFIX "A" IS USED AND METAL POSTS WHEN THE SUFFIX "B" IS USED I.E., TYPE 1-A (WOOD POSTS) OR TYPE 1-B (METAL POSTS).

8. STAPLE ALTERNATING MESH WIRES ON WOOD POSTS EXCEPT FOR SAG SECTIONS WHERE ALL WIRES WILL BE STAPLED. INSTALL FOUR WIRE CLAMPS PER POST FOR MESH WIRE ON STEEL POSTS SHALL EXCEPT IN SAG SECTIONS WHERE THREE ADDITIONAL CLAMPS PER POST ARE REQUIRED.

9. PLACE ONE STAPLE PER WIRE PER POST FOR BARBED WIRE ON WOOD POSTS AND TWO STAPLES PER WIRE PER POST ON BRACES IN SAG SECTIONS. SECURELY WRAP WIRE ENDS AROUND A POST AT A BRACE OR SPLICE IN LINE. PLACE ONE WIRE CLAMP PER WIRE PER POST FOR BARBED WIRE ON METAL POSTS.

10. ATTACH ANCHOR PLATES TO METAL POSTS UNLESS THE POST IS SET IN SOLID ROCK. GROUT DRILL HOLES FOR METAL POSTS SET IN SOLID ROCK.

11. ENSURE THAT THE TOP OF THE FENCE DOES NOT PROJECT ABOVE THE TOP OF THE PARAPET OR RAILING WHEN A FENCE TIES INTO A BRIDGE PARAPET OR RAILING.

12. CONSTRUCT WOVEN WIRE AND BARBED WIRE FENCES IN ACCORANCE WITH SECTION 610 - FENCES AND CONSTRUCT METAL POSTS, BARBED WIRE, MESH WIRE, AND WOVEN WIRE IN ACCORDANCE WITH 708.09 THRU 708.12 OF THE STANDARD SPECIFICATIONS FOR HIGHWAY CONSTRUCTION.

13. GROUND BARBED, WOVEN, MESH, AND COMBINATION WIRE FENCES IN ACCORDANCE WITH THE FENCE GROUNDING TABLE AND THE FENCE GROUNDING DETAIL. GROUND TYPE 2 GATES FALLING WITHIN THESE AREAS WITH A FLEXIBLE GROUNDING CABLE ATTACHED TO THE GATE FABRIC. ATTACH THE CABLE TO A SEPARATE FENCE GROUNDING SYSTEM ON THE SWING SIDE OF THE GATE. DO NOT GROUND TYPE 1 GATES.

14. NOT TO SCALE.

ORIGINAL STORED AT: ITD, Headquarters 3311 West State Boise, Idaho

ORIGINAL SIGNED BY: RYAN D. LANCASTER DATE ORIGINAL SIGNED: DECEMBER 17, 2012

REVISIONS								
NO.	DATE	BY	NO.	DATE	BY	NO.	DATE	BY
16	9-10	PLR	6	3-80		11	1-97	MSM
17	12-12	RDL	7	7-84		12	11-00	MSM
3	2-74		8	5-90	GB	13	11-01	MSM
4	2-77		9	12-92	MSM	14	5-04	MSM
5	1-78		10	9-93	MSM	15	10-04	MSM

SCALES SHOWN ARE FOR 11" X 17" PRINTS ONLY

CADD FILE NAME: f2a_1212.std

DRAWING DATE: FEBRUARY, 1973

IDAHO TRANSPORTATION DEPARTMENT

BOISE IDAHO

ORIGINAL SIGNED BY: LOREN THOMAS
HIGHWAYS PROGRAM OVERSIGHT ENGINEER
ORIGINAL SIGNED BY: TOM COLE
CHIEF ENGINEER

STANDARD DRAWING

STANDARD BARBED, WOVEN, MESH, COMBINATION WIRE FENCES, & FENCING DETAILS

REQUIRES SHEETS 1 OF 3 & 2 OF 3

English

STANDARD DRAWING NO.

F-2-A

SHEET 3 OF 3

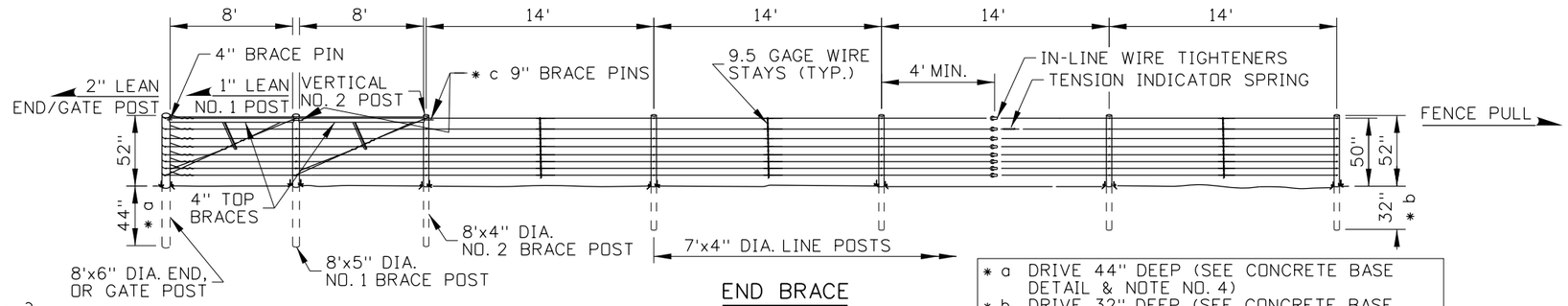

END BRACE

FENCE GROUNDING TABLE		
kV	* GROUNDING INTERVAL	FENCE DISTANCE FROM TRANSMISSION ℄
500	200'	<100'
500	500'	100' - 200'
345	400'	<100'
345	1000'	100' - 150'
>230	500'	50' - 100'
100-230	400'	WITHIN R/W
<100	1/4 MI.	WITHIN R/W

* GROUND FENCE SECTIONS THAT ARE SHORTER THAN THE GROUNDING INTERVAL ONCE.

* a DRIVE 44" DEEP (SEE CONCRETE BASE DETAIL & NOTE NO. 4)
* b DRIVE 32" DEEP (SEE CONCRETE BASE DETAIL & NOTE NO. 4)
* c INSTALL 3/8" DIA. GALVANIZED STEEL BRACE PINS WITH THE LENGTH SHOWN. PRE DRILL TIMBERS.
* d 7'-11" x 4" OUTSIDE HORIZ. TIMBERS.
* e ROTATE STAPLE ON POSTS TO STRADDLE ACROSS THE WOOD GRAIN AND ALLOW ENOUGH SPACE FOR WIRE TO SLIDE THROUGH THE BACK OF THE STAPLE.

MAXIMUM LENGTH OF WIRE PER IN-LINE TIGHTENER TABLE		
LEVEL TERRAIN		UNEVEN TERRAIN
STRAIGHT	4000'	REDUCE LENGTHS SHOWN BY 250' FOR EACH MAJOR RISE OR DIP.
ONE 90° CORNER	3000'	
TWO 90° CORNERS	2000'	
THREE 90° CORNERS	1500'	
FOUR 90° CORNERS	1000'	

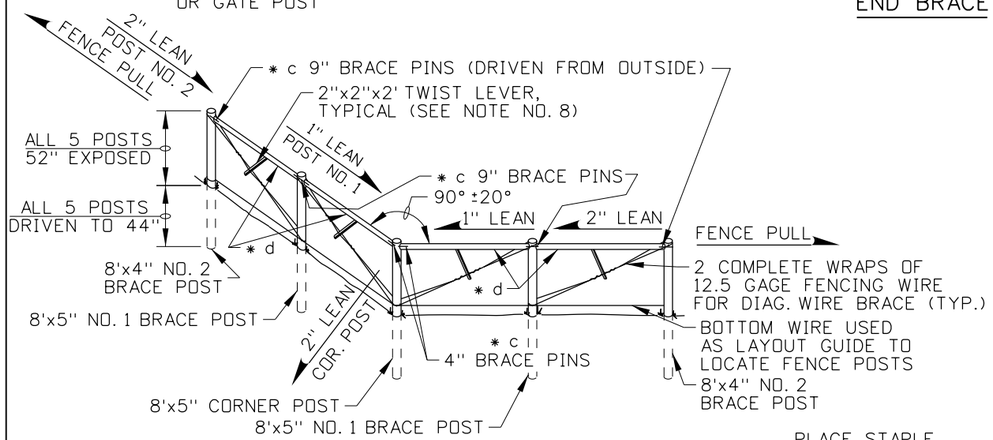

BRACED CORNER PERSPECTIVE

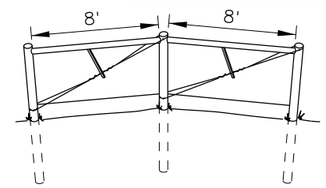

SAME CONSTRUCTION METHOD AS BRACE CORNER

TOP OF RISE BRACE

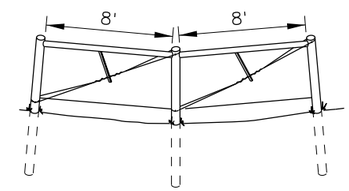

SAME CONSTRUCTION METHOD AS BRACE CORNER

BOTTOM OF DIP BRACE

NOTES

1. INSTALL FENCE IN ACCORDANCE WITH THE PUBLICATION HOW TO BUILD FENCES WITH USS MAX-TEN 200 HIGH-TENSILE FENCE WIRE, UNLESS OTHERWISE SPECIFIED.
2. PRESSURE TREAT WOOD POSTS AND STAYS IN ACCORDANCE WITH AASHTO M 133. MEASURE TIMBER DIAMETERS SHOWN AT THE SMALL END.
3. TO ALLOW FOR EXPANSION AND CONTRACTION, DO NOT STAPLE THE WIRE TIGHT TO THE POSTS. THE STAPLES ARE 1 3/4" - 9 GAGE WITH SLASH CUT POINTS. ENSURE THAT THE STAPLES ARE ZINC COATED IN ACCORDANCE WITH ASTM A 116, CLASS 1.
4. END POSTS, BRACE POSTS AND LINE POSTS ARE RECOMMENDED TO BE DRIVEN INTO THE GROUND WHERE SOIL CONDITIONS PERMIT. SEE CONCRETE BASE FOR INSTALLATION WHERE SOIL CONDITIONS DO NOT PERMIT DRIVEN POSTS.
5. ENSURE THAT BRACE PINS, WIRE CLIPS, TENSION INDICATOR SPRINGS, AND IN-LINE TIGHTENERS ARE ZINC COATED IN ACCORDANCE WITH ASTM A116, CLASS 3.
6. USE 12.5 GAGE STEEL FENCE WIRE WITH A MINIMUM OF 200,000 PSI TENSILE STRENGTH. ENSURE THAT THE WIRE IS ZINC COATED IN ACCORDANCE WITH ASTM A116, CLASS 3.
7. PLACE THE IN-LINE WIRE TIGHTENERS AS CLOSE TO THE CENTER OF THE FENCE RUN AS PRACTICABLE. PLACE TENSION INDICATOR SPRING(S) ON THE SECOND WIRE FROM THE TOP.
8. ACHIEVE PROPER TENSION ON THE DIAGONAL BRACE WIRE BY TWISTING THE WIRES 3 (MIN.) TO 5 (MAX.) TURNS. SECURELY FASTEN THE TWIST LEVER TO THE TOP HORIZONTAL TIMBER.
9. LINE WIRES SHOULD BE STAPLED TO THE LINE POSTS ONLY AFTER TAKING UP PRELIMINARY TENSION OF APPROXIMATELY 150 LBS. ON EACH WIRE.
10. STRING LINE WIRES ON THE LIVESTOCK SIDE OF THE FENCE, EXCEPT ON CURVES AND CORNERS. ON CURVES AND CORNERS STRING THE LINE WIRES ON THE OUTSIDE.
11. GROUND HIGH TENSION WIRE ACCORDING TO THE FENCE GROUNDING TABLE AND AS SHOWN ON GROUNDING DETAIL.
12. NOT TO SCALE.

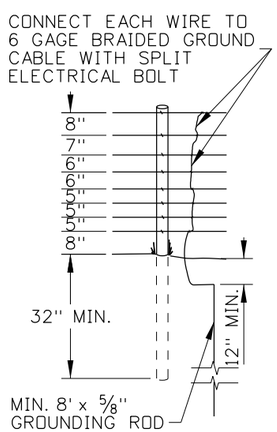

GROUNDING DETAIL

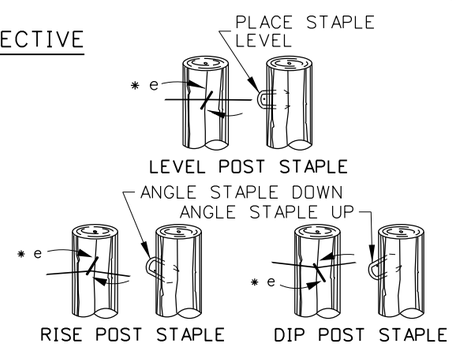

STAPLING DETAIL

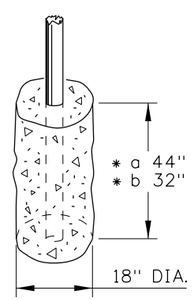

USE AT ALL POSTS WHEN SOIL CONDITIONS DO NOT PERMIT DRIVEN POSTS

CONCRETE BASE DETAIL

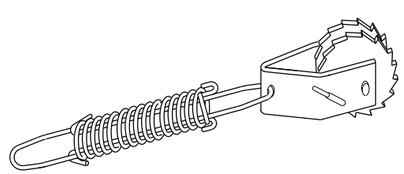

COMPRESSION OF THE INDICATOR SPRING BY 1 3/4" WILL INDICATE A TENSION OF APPROXIMATELY 250 LBS. ±10 LBS.

TENSION INDICATOR SPRING WITH IN-LINE TIGHTENER

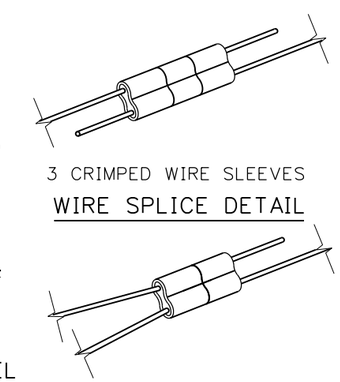

3 CRIMPED WIRE SLEEVES

WIRE SPLICE DETAIL

2 CRIMPED WIRE SLEEVES

WIRE TIE OFF AND END POSTS DETAIL

ORIGINAL STORED AT: ITD, Headquarters 3311 West State Boise, Idaho

ORIGINAL SIGNED BY: RYAN D. LANCASTER DATE ORIGINAL SIGNED: DECEMBER 17, 2012

REVISIONS									
NO.	DATE	BY	NO.	DATE	BY	NO.	DATE	BY	
1	1-97	MSM							
2	10-00	MSM							
3	10-04	MSM							
4	12-12	RDL							

SCALES SHOWN ARE FOR 11" X 17" PRINTS ONLY

CADD FILE NAME: f2b_1212.std

DRAWING DATE: SEPTEMBER, 1993

IDAHO TRANSPORTATION DEPARTMENT

BOISE IDAHO

ORIGINAL SIGNED BY: LOREN THOMAS
HIGHWAYS PROGRAM OVERSIGHT ENGINEER
ORIGINAL SIGNED BY: TOM COLE
CHIEF ENGINEER

STANDARD DRAWING

HIGH TENSION 8 WIRE FENCE

English

STANDARD DRAWING NO.

F-2-B

SHEET 1 OF 1

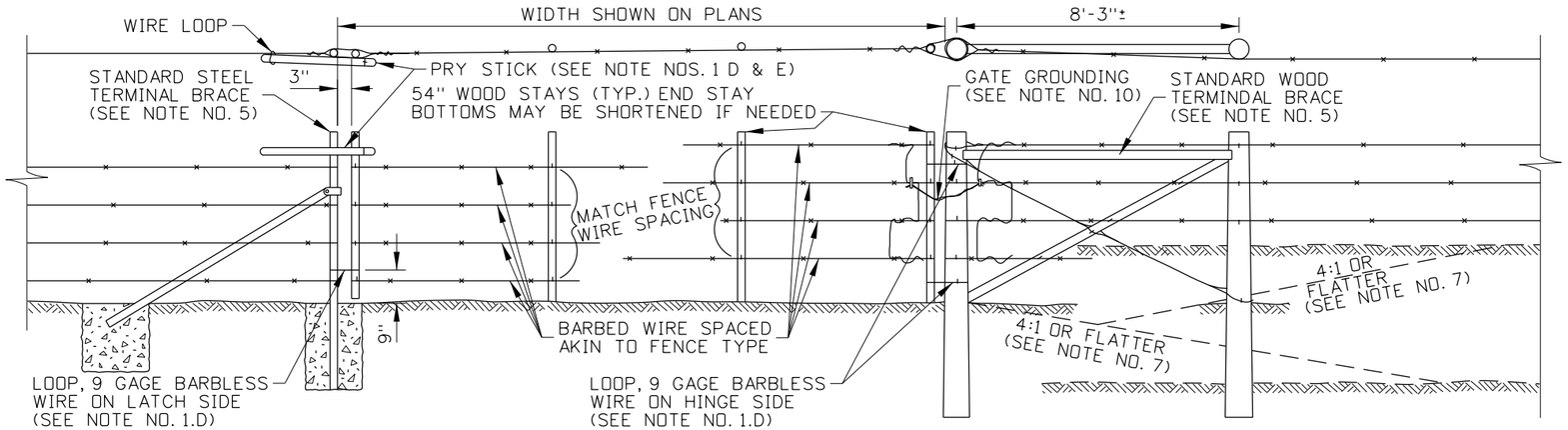

TYPE 1 GATE - FOR FENCE TYPES 1, 5, 6, & 11

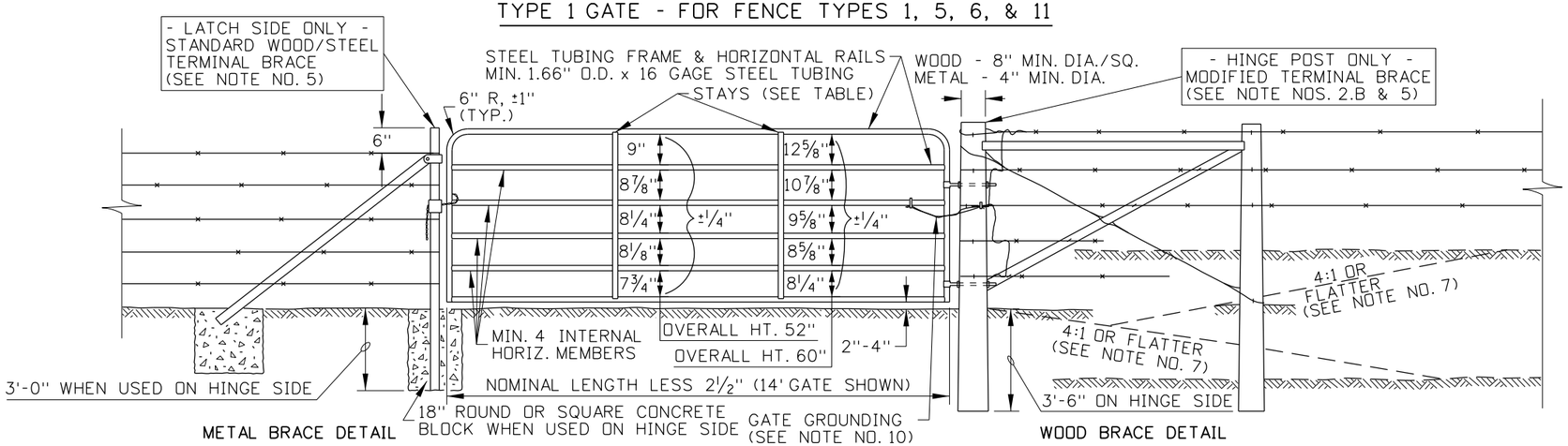

TYPE 1A GATE - RECOMMENDED FOR FENCE TYPES 1, 5, 6, & 11

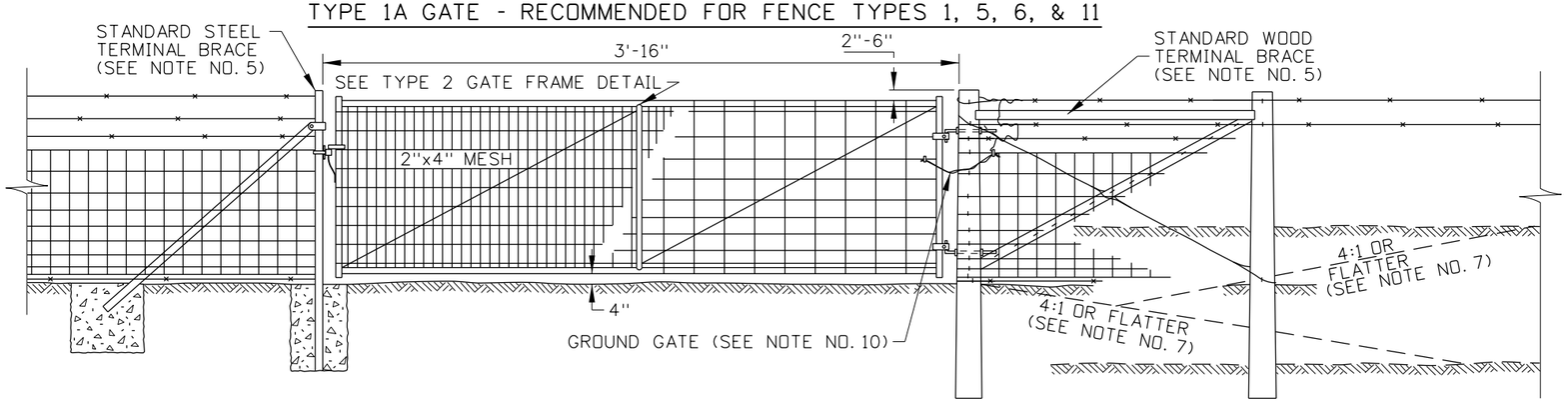

TYPE 2 GATE - FOR FENCE TYPES 2, 3, 7, 8, & 33

ORIGINAL STORED AT: ITD, Headquarters 3311 West State Boise, Idaho

ORIGINAL SIGNED BY: RYAN D. LANCASTER
DATE ORIGINAL SIGNED: JANUARY 31, 2013

REVISIONS

NO.	DATE	BY	NO.	DATE	BY	NO.	DATE	BY
1	9-76		6	10-04	MSM			
2	5-95	MSM	7	12-12	RDL			
3	8-97	MSM						
4	6-02	MSM						
5	6-03	MSM						

SCALES SHOWN ARE FOR 11" X 17" PRINTS ONLY

CADD FILE NAME: f2c_0213.std

DRAWING DATE: JANUARY, 1962

IDAHO TRANSPORTATION DEPARTMENT

BOISE IDAHO

ORIGINAL SIGNED BY: LOREN THOMAS
HIGHWAYS PROGRAM OVERSIGHT ENGINEER
ORIGINAL SIGNED BY: TOM COLE
CHIEF ENGINEER

STANDARD DRAWING

GATE TYPES 1, 1A, & 2

REQUIRES SHEET 2 OF 2 & STD. DWG. F-2-A

English

STANDARD DRAWING NO.

F-2-C

SHEET 1 OF 2

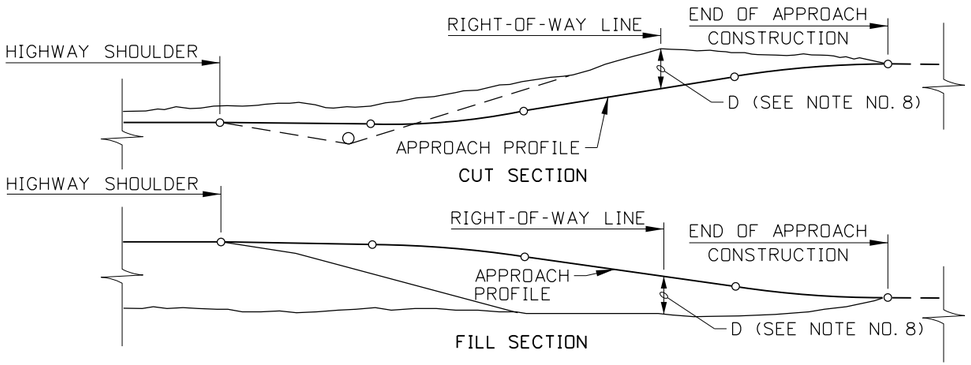

VEHICLE APPROACH GATE INSTALLATION DETAIL

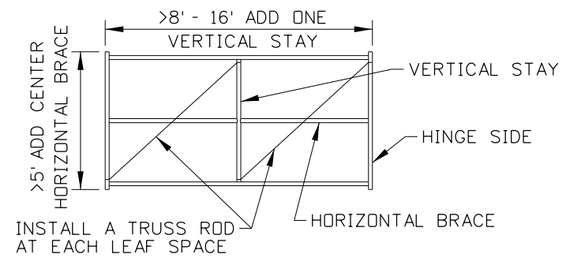

TYPE 2 GATE FRAME DETAIL

(SEE NOTE NO. 3.I)

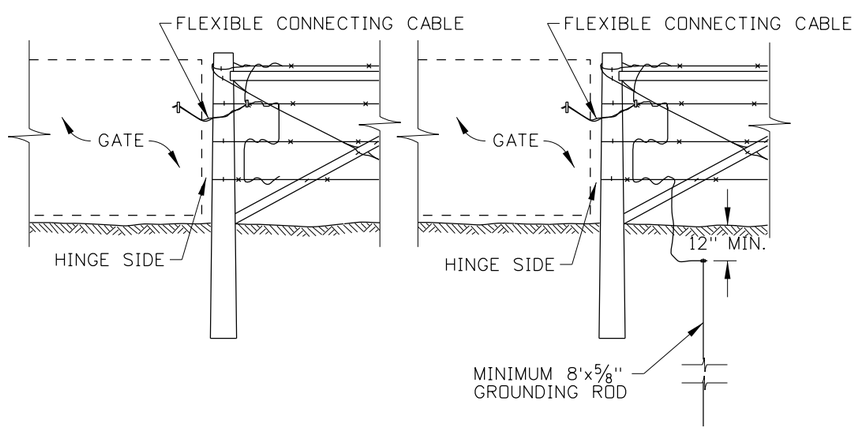

FENCE GROUNDING

ROD GROUNDING

GATE GROUNDING DETAIL

GATE GROUNDING TABLE			
kV	GATE DISTANCE FROM TRANSMISSION ℄	GATE TYPE	* GROUNDING TYPE
500	<100'	1, 1A, 2	ROD
500	100' - 200'	1, 1A, 2	FENCE
345	<100'	1A, 2	ROD
345	100' - 150'	1A, 2	FENCE
>230	50' - 100'	1A, 2	FENCE
100-230	WITHIN R/W	NONE	NONE
<100	WITHIN R/W	NONE	NONE
* SEE GATE GROUNDING DETAIL			

GATE STAY & WEIGHT TABLE			
GATE TYPE	WIDTH	NO. STAYS	GATE WT. (MIN. LBS.)
TYPE 1	4'-6'	0	N/A
	8'-12'	1	N/A
	14'-16'	2	N/A
	4'	0	37
TYPE 1A	6'	0	50
	8'	1	68
	10'	1	81
	12'	1	95
	14'	2	113
	16'	2	126
TYPE 2	SEE TYPE 2 GATE FRAME DETAIL		

NOTES

1. TYPE 1 GATES:
   A. USE FOR FENCE TYPES 1, 5, 6, & 11.
   B. USE A SECTION OF METAL FENCE POST OR ROUND WOOD POST 2 1/2" TO 3" IN DIAMETER. PLACE LARGER WOODEN STAYS AT THE GATE ENDS.
   C. ENSURE THAT PRY STICK ARE A 24" LENGTH OF HARDWOOD TOOL HANDLE.
   D. ATTACH WIRE LOOPS AND PRY STICK WIRE WITH A DOUBLE WOVEN 9 GAGE BARBLESS WIRE OR A SUITABLE CHAIN. ADJUST THE LOOPS AND PRY STICK SO THAT THE GATE IS TAUT WHEN CLOSED. FASTEN THE LOOPS TO THE ADJACENT LATCH/HINGE POST.
   E. STAPLE THE STAYS AND END POSTS TO THE CONNECTING WIRES.
   F. ENSURE THAT THE GATE BRACES MATCH THE ADJACENT FENCE TYPE.
2. TYPE 1A GATES:
   A. USE WITH FENCE TYPES 1, 5, 6, & 11. THE USE OF TYPE 1A GATES IN PLACE OF TYPE 2 GATES REQUIRES THE APPROVAL OF THE ENGINEER AND THE ADJACENT PROPERTY OWNER(S).
   B. TYPE 1A GATES REQUIRE A MODIFIED METAL OR WOODEN BRACE. USE OF THE METAL BRACE REQUIRES A 4" MINIMUM PIPE (1/4" WALL) ON THE HINGE POST. USE OF THE WOODEN BRACE REQUIRES A MINIMUM 8" SQUARE OR SMALL END DIAMETER FOR THE HINGE POST. DO NOT USE BAR ANGLES ON TUBE GATE TERMINALS. WOOD HINGE POSTS ARE 8' AND METAL HINGE POSTS ARE 7'-6" IN LENGTH. THE METAL HINGE POST REQUIRES AN 18" SQUARE OR ROUND ANCHOR BLOCK.
   C. ENSURE THAT HINGES FOR TYPE 1A GATES WIDER THAN 10' HAVE LEVELING THREADS ON A MINIMUM 3/4" DIAMETER ROD.
   D. ENSURE THAT LATCHES FOR TYPE 1A GATES ARE LOCKABLE AND NON-SAGGING ON THE LATCH SIDE WHEN LATCHED.
   E. ENSURE THAT TYPE 1A GATES SWING 180° UNLESS OTHERWISE SPECIFIED.
3. TYPE 2 GATES:
   A. USE FOR FENCE TYPES 2, 3, 7, 8, & 33.
   B. ENSURE THAT GATE FRAMES ARE FABRICATED WITH A 1.05 INCH O.D. COLD ROLLED OR DRAWN GALVANIZED STEEL TUBING WITH A WALL THICKNESS OF 0.095 INCHES OR 1 INCH GALVANIZED PIPE.
   C. USE 12.5 GAGE (MINIMUM) GALVANIZED WIRE MESH.
   D. EQUIP GATE WITH AN ADJUSTABLE DIAGONAL TRUSS ROD.
   E. USE GALVANIZED MALLEABLE STEEL HINGES AND LATCHES.
   F. CONSTRUCT GATES FOR TYPE 7 FENCING WITH A 2" x 4" MESH.
   G. ENSURE THAT GATES FOR TYPE 8 FENCING HAVE 3 SETS OF HINGES AND A HORIZONTAL BRACE MEMBER.
   H. ENSURE THAT TYPE 2 GATE FRAMES ARE SHOP WELDED. PAINT WELDS WITH 702.02 PAINT FORMULA NO.2. THE TRUSS ROD TIGHTENER AND NON-TIGHTENING END OF THE TRUSS ROD MAY BE WELDED TO THE GATE.
   I. ENSURE THAT TYPE 2 GATE FRAMES HAVE EXTRA VERTICAL STAY(S) AND A CENTERED HORIZONTAL BRACE WELDED IN PLACE IN ACCORDANCE WITH THE TYPE 2 GATE FRAME DETAIL. EVENLY SPACE THE VERTICAL STAY(S) ON THE GATE. ENSURE THAT EACH LEAF SPACE HAS A TRUSS ROD.
4. TYPE 3 GATES:
   TYPE 3 GATES ARE FOR CHAIN LINK FENCES ONLY. SEE STANDARD DRAWING F-2-D.
5. GATES REQUIRE A LIKE PAIR OF METAL OR WOOD TERMINAL BRACES AS DETAILED ON STANDARD DRAWING F-2-A (SHEET 2 of 3). GATE TYPE 1A REQUIRES A LARGER HINGE POST ON THE TERMINAL BRACE.
6. PROVIDE A DROP ROD, LATCH, CHAIN, OR SNAP, APPROVED BY THE ENGINEER, BETWEEN THE GATES WHEN TWO TYPE 1A OR 2 GATES ARE USED FOR A SINGLE OPENING.
7. PROVIDE 4:1 OR FLATTER SIDE SLOPES ON THE VEHICLE APPROACH TO PROVIDE FOR INSTALLATION OF THE CONNECTING FENCE.
8. D = DEPTH AT RIGHT-OF-WAY LINE. WHEN D IS 5' OR LESS, INSTALL GATES AT THE RIGHT-OF-WAY LINE. WHEN D IS MORE THAN 5', INSTALL GATES AT THE END OF THE APPROACH CONSTRUCTION OR AS DIRECTED BY THE ENGINEER. ANGLE AND INSTALL RIGHT-OF-WAY FENCE ALONG THE EDGE OF THE APPROACH CUT OR FILL SLOPE. CONSTRUCT APPROACHES IN ACCORDANCE WITH STD. DWG. H-4-A.
9. ALTERNATE DESIGNS OF TYPE 1A AND TYPE 2 GATES MAY BE USED. PRIOR APPROVAL OF THE SHOP DRAWINGS BY THE ENGINEER IS REQUIRED BEFORE USING ALTERNATE GATE DESIGNS.
10. GROUND GATES ACCORDING TO THE GATE GROUNDING TABLE AND GATE GROUNDING DETAIL. ENSURE THAT GROUNDED GATES HAVE A FLEXIBLE COPPER CABLE ATTACHING THE GATE AND FENCE WIRING ON THE HINGE SIDE OF THE GATE.
11. NOT TO SCALE.

ORIGINAL STORED AT: ITD, Headquarters 3311 West State Boise, Idaho

ORIGINAL SIGNED BY: RYAN D. LANCASTER DATE ORIGINAL SIGNED: JANUARY 31, 2013

REVISIONS								
NO.	DATE	BY	NO.	DATE	BY	NO.	DATE	BY
1	9-76		6	10-04	MSM			
2	5-95	MSM	7	12-12	RDL			
3	8-97	MSM						
4	6-02	MSM						
5	6-03	MSM						

SCALES SHOWN ARE FOR 11" X 17" PRINTS ONLY

CADD FILE NAME: f2c_0213.std

DRAWING DATE: JANUARY, 1962

IDAHO TRANSPORTATION DEPARTMENT

BOISE IDAHO

ORIGINAL SIGNED BY: LOREN THOMAS
HIGHWAYS PROGRAM OVERSIGHT ENGINEER
ORIGINAL SIGNED BY: TOM COLE
CHIEF ENGINEER

STANDARD DRAWING

GATE TYPES 1, 1A, & 2

REQUIRES SHEET 1 OF 2 & STD. DWG. F-2-A

English

STANDARD DRAWING NO.

F-2-C

SHEET 2 OF 2

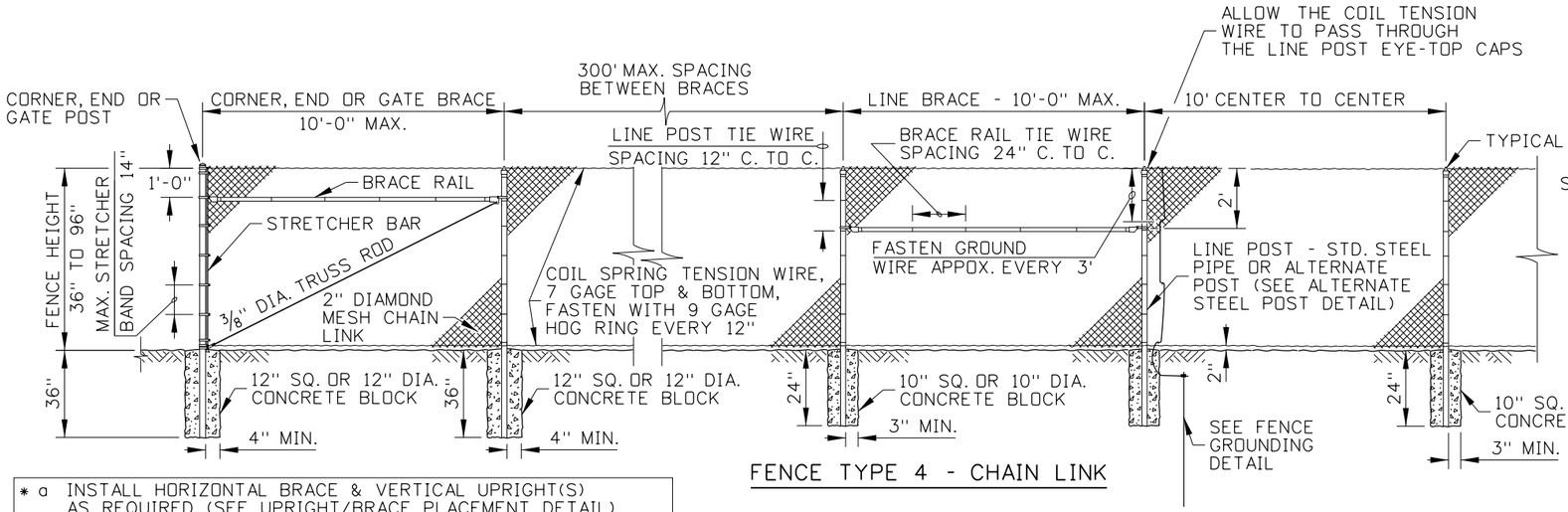

FENCE TYPE 4 - CHAIN LINK

* a INSTALL HORIZONTAL BRACE & VERTICAL UPRIGHT(S) AS REQUIRED (SEE UPRIGHT/BRACE PLACEMENT DETAIL)
* b INSTALL TWO NARROW SINGLE OR TWO WIDE SINGLE LEAVES WITH DROP ROD FORK, GUIDE, & BASE.

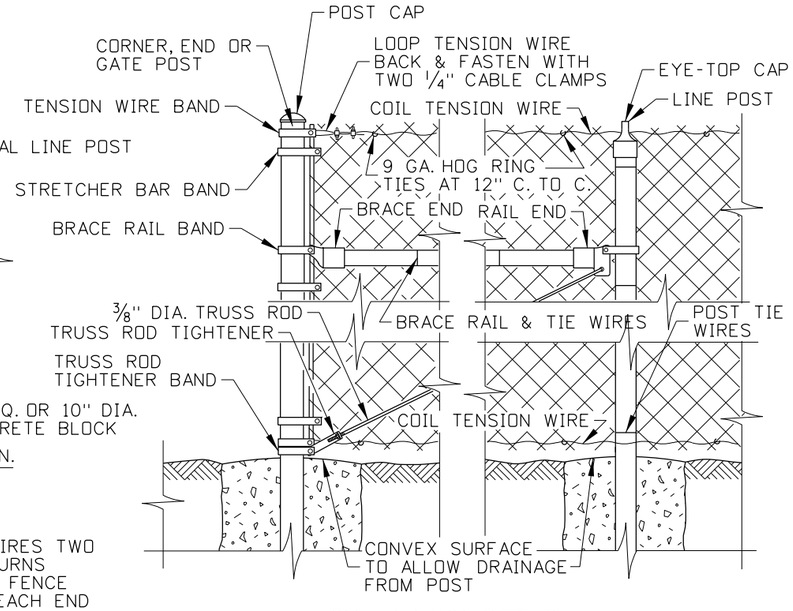

CHAIN LINK DETAIL

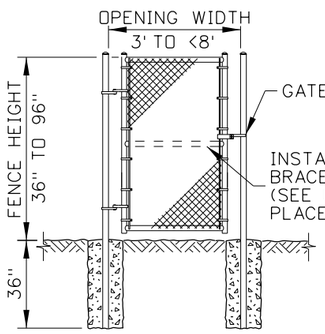

NARROW SINGLE LEAF GATES

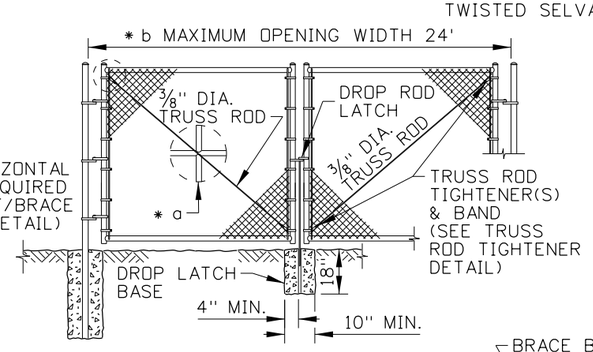

DOUBLE LEAF GATES

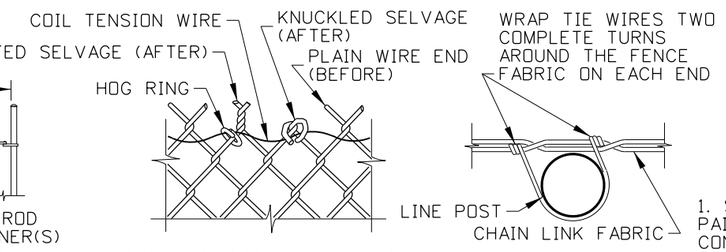

WIRE SELVAGE DETAIL

(SEE NOTE NO. 3.E)

CHAIN LINK FENCE TIE

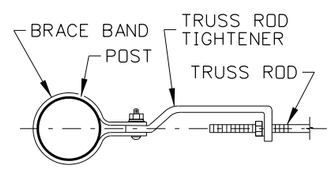

TRUSS ROD TIGHTENER DETAIL

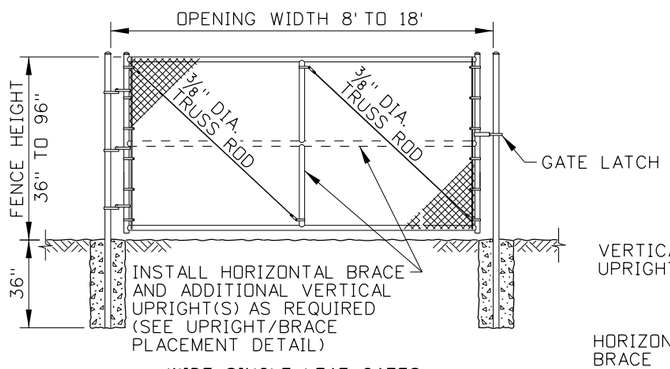

WIDE SINGLE LEAF GATES

TYPE 3 GATES

(SEE NOTE NO. 10)

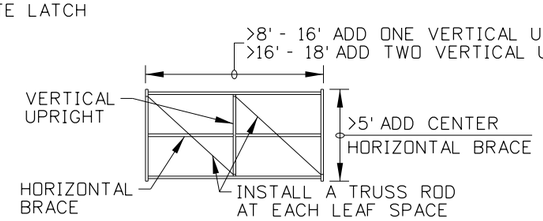

UPRIGHT/BRACE PLACEMENT DETAIL

(SEE NOTE NO. 2)

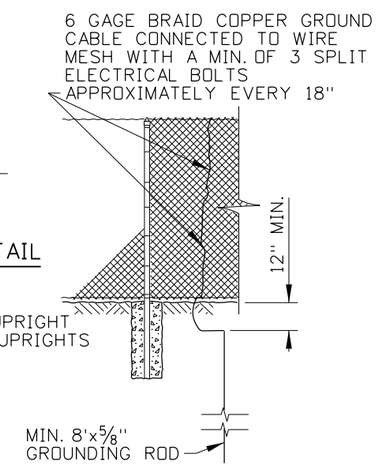

CHAIN LINK FENCES

FENCE GROUNDING DETAIL

(SEE FENCE GROUNDING TABLE AND NOTE NO. 10)

NOTES

1. SHOP WELD TYPE 3 GATES. PAINT WELDS IN ACCORDANCE WITH 707.02, PAINT FORMULA NO. 2 OF THE STANDARD SPECIFICATIONS FOR HIGHWAY CONSTRUCTION. THE TRUSS ROD TIGHTENER AND THE NON-TIGHTENING END OF THE TRUSS ROD MAY BE WELDED TO THE GATE.
2. SPACE THE VERTICAL UPRIGHT(S) EVENLY ON THE GATE LEAF AND INSTALL A TRUSS ROD(S) AS SHOWN ON THE UPRIGHT/BRACE PLACEMENT DETAIL. SPACE HORIZONTAL BRACE(S) EVENLY ON THE GATE LEAF.
3. CONSTRUCT CHAIN LINK FENCE IN ACCORDANCE WITH 708.13, CHAIN LINK FENCE OF THE STANDARD SPECIFICATIONS FOR HIGHWAY CONSTRUCTION.
   - A. SPACE POSTS EQUAL DISTANCES APART. 10' MAXIMUM SPACING UNLESS OTHERWISE DIRECTED ON PLANS OR BY THE ENGINEER.
   - B. SECURELY FASTEN THE POST CAPS TO THE POSTS.
   - C. SECURELY FASTEN THE BRACE RAILS AND TRUSS RODS TO POST WITH BRACE BANDS WITH THREADED TAKE-UP ON THE TRUSS RODS.
   - D. STRETCH THE FENCE FABRIC SMOOTH SO THAT IT HAS A UNIFORM APPEARANCE.
   - E. SELVAGE THE PLAIN WIRE ENDS ON THE TOP AND BOTTOM OF THE CHAIN LINK FABRIC BY THE TWISTED OR KNUCKLED METHOD. SEE WIRE SELVAGE DETAIL.
   - F. SET THE POSTS IN CONCRETE UNLESS OTHERWISE DIRECTED ON THE PLANS.
4. ADJUST THE POST TOP ELEVATIONS TO PROVIDE A SMOOTH VISUAL FENCE PROFILE. INSTALL CORNER POSTS AT HORIZONTAL BREAKS IN THE FENCE OF 15° OR MORE.
5. THE DESIGN OF CHAIN LINK HARDWARE MAY VARY SOMEWHAT FROM THAT SHOWN. ENSURE THAT HARDWARE AND MATERIALS USED ON A SINGLE INSTALLATION ARE UNIFORM AND COMPATIBLE.

ORIGINAL STORED AT: ITD, Headquarters 3311 West State Boise, Idaho

ORIGINAL SIGNED BY: RYAN D. LANCASTER
DATE ORIGINAL SIGNED: JANUARY 31, 2013

REVISIONS

NO.	DATE	BY	NO.	DATE	BY	NO.	DATE	BY
1	1-97	MSM						
2	12-01	MSM						
3	1-04	MSM						
4	10-04	MSM						
5	12-12	RDL						

SCALES SHOWN ARE FOR 11" X 17" PRINTS ONLY

CADD FILE NAME: f2d_0213.std

DRAWING DATE: DECEMBER, 1993

IDAHO TRANSPORTATION DEPARTMENT

BOISE IDAHO

ORIGINAL SIGNED BY: LOREN THOMAS
HIGHWAYS PROGRAM OVERSIGHT ENGINEER
ORIGINAL SIGNED BY: TOM COLE
CHIEF ENGINEER

STANDARD DRAWING

CHAIN LINK FENCE
FENCE TYPE 4

REQUIRES SHEET 2 OF 2

English

STANDARD DRAWING NO.

F-2-D

SHEET 1 OF 2

HARDWARE ITEM DESCRIPTION	STANDARD REQUIREMENTS
BRACE POST	(SEE NOTE NO. 3)
CORNER, END AND GATE POSTS	(SEE NOTE NO. 3)
LINE POST (INTERMEDIATE POST)	(SEE NOTE NO. 3)
POST CAP	CAST NON-FERROUS ALLOY OR GALVANIZED PRESSED STEEL CAP MUST FIT SNUGGLY ON POST AND GATE TOP
EYE-TOP CAP	GALVANIZED PRESSED STEEL MIN. 3/32" THICKNESS OR GALVANIZED MALLEABLE FERROUS ALLOY
STRECHER BAR BAND	CLASS 1 - MIN. 1/8" x 3/4" MIN. GALVANIZED STEEL CLASS 2 - MIN. 3/32" x 5/16" MIN. GALVANIZED STEEL
TENSION WIRE/BRACE BAND	CLASS 1 - MIN. 1/8" x 3/4" MIN. GALVANIZED STEEL CLASS 2 - MIN. 3/32" x 5/16" MIN. GALVANIZED STEEL
BAND BOLT	CLASS 1 - 5/16" DIA. x 1 3/4" GALV. CARRIAGE BOLT CLASS 2 - 3/8" DIA. x 1 1/4" GALV. CARRIAGE BOLT, (LOCK WASHER & FLAT WASHER FOR EACH BAND)
BRACE RAIL/TOP RAIL	MIN. 1 3/8" DIA. (SEE NOTE NO. 3)
RAIL END	GALVANIZED PRESSED STEEL OR GALVANIZED MALLEABLE FERROUS ALLOY MIN. 3/8" THICKNESS ON BACK BOLTING APPENDAGE
BRACE END	GALVANIZED PRESSED STEEL OR GALVANIZED MALLEABLE FERROUS ALLOY MIN. 3/8" THICKNESS ON BACK BOLTING APPENDAGE
TRUSS ROD TIGHTENER	CLASS 1 - MIN. 3/8" FORMED GALVANIZED STEEL CLASS 2 - MIN. 1/4" FORMED GALVANIZED STEEL
TRUSS ROD	3/8" GALVANIZED, NC TREADED ROD, LOCK WASHER, & FLAT WASHER WITH TWO 90° BENDS OPPOSITE OF TREADED END
TOP RAIL SLEEVE	GALVANIZED STEEL, NOT TO BE USED ON R/W FENCES, MUST MEET REQUIRED PIPE THICKNESSES
TENSION BAR	CLASS 1 - MIN. 1/8" x 3/4" GALVANIZED STEEL CLASS 2 - MIN. 1/8" x 5/16" GALVANIZED STEEL
FENCE FABRIC	2" GALVANIZED DIAMOND MESH STEEL FABRIC, (SEE NOTE NO. 3)
TIE WIRES	MIN. 9 GAGE ALUMINUM WITH ONE HOOKED END
COIL TENSION WIRE	MIN. 7 GAGE. (SEE NOTE NO. 3)
GATE FORK LATCH	MIN. 1/8" GALVANIZED PRESSED STEEL OR MALLEABLE FERROUS ALLOY. ONE LATCH PER EACH SINGLE GATE WITH BENT MIN. 3/8" DIA. ATTACHMENT BOLT, WASHER & NUT.
HEAVY GATE HINGE (FENCE SIDE / GATE SIDE)	MIN. 1/8" GALVANIZED PRESSED STEEL WITH TWO 3/8" U-BOLTS, LOCK WASHER & NUTS PER HINGE. USE 2 HINGES PER GATE LEAF UP TO 8' IN WIDTH AND 3 HINGES PER GATE LEAF WIDTHS GREATER THAN 8' (THESE HINGES ARE RECOMMENDED FOR MAINTENANCE & COMMERCIAL INSTALLATIONS).

HARDWARE ITEM DESCRIPTION (CON'T.)	STANDARD REQUIREMENTS
RESIDENTAL GATE HINGE	MIN. 1/8" GALVANIZED PRESSED STEEL WITH 3/8" DIA. x 3" CARRIAGE BOLTS, LOCK WASHER & NUTS PER HINGE. USE 2 HINGES PER GATE LEAF UP TO 6' IN HEIGHT AND 3 HINGES PER GATE LEAF HEIGHTS GREATER THAN 6'.
INDUSTRIAL DROP ROD FORK & GUIDE (1/4")	MIN. 1/8" GALVANIZED PRESSED STEEL. DROP ROD GUIDE INCLUDES 3/8" x 3" CARRIAGE BOLT WITH LOCK WASHER & NUT. DROP ROD FORK IS TO BE WELDED TO ROD & PAINTED WITH AN APPROVED ZINC RICH PAINT.
BARBED WIRE & 3-WIRE BARBARM	BARBED WIRE: 14 GAGE SPACED GALVANIZED MEDIUM CARBON STEEL WIRE WITH BARBS SPACED AT 5" C. to C. GALVANIZING SHALL CONFORM TO APPLICABLE A.S.T.M. DES. A-121-66 FOR ZINC-COATED & AASHTO M 280 SPECIFICATIONS. 3-WIRE BARBARM: BARBWIRE ARM (ONE PIECE "Z" CUT) FITS 1 5/8" O.D. POST, 1 5/8" TOP RAIL" FITS 2" O.D. POST, 1 5/8" TOP RAIL" FITS 2 1/2" O.D. POST, 1 5/8" TOP RAIL" FITS 3" O.D. POST, 1 5/8" TOP RAIL"

FENCE GROUNDING TABLE

kV	* GROUNDING INTERVAL	FENCE DISTANCE FROM TRANSMISSION ℄	FENCE TYPE
500	1, 1A, 2	<100'	4
500	1, 1A, 2	100' - 200'	4
345	1A, 2	<100'	4
345	1A, 2	100' - 150'	4
>230	1A, 2	50' - 100'	4
100-230	NONE	WITHIN R/W	4
<100	NONE	WITHIN R/W	4

* FENCE SECTIONS THAT ARE SHORTER THAN THE GROUNDING INTERVAL SHALL BE GROUNDED ONCE.

NOTES CON'T.

6. THE MINIMUM FENCE HEIGHT IS 8' WHEN INSTALLING SECURITY FENCING USING THE 3-WIRE BARBARM & BARBED WIRE. INSTALL THE TOP RAIL ON SECURITY FENCES USING THE 3-WIRE BARBARM. DO NOT USE RAZOR WIRE WITH 3-WIRE BARBARM.
7. THE ENGINEER MUST APPROVE CHAIN LINK HARDWARE PRIOR TO INSTALLATION.
8. A TOP RAIL MAY BE USED ON CHAIN LINK FENCES CONSTRUCTED OUTSIDE OF THE HIGHWAY RIGHT-OF-WAY. THE TOP RAIL IS INCIDENTAL TO THE COST OF THE FENCE.
9. LATH USED FOR VISUAL SCREENING, CANTILEVER GATES, ROLLER GATES, OR SPECIAL HARDWARE ITEM(S) AS SHOWN ON THE PLANS MUST BE APPROVED BY THE ENGINEER PRIOR TO INSTALLATION.
10. GROUND CHAIN LINK FENCES IN ACCORDANCE WITH THE FENCE GROUNDING TABLE AND THE FENCE GROUNDING DETAIL. GROUND CHAIN LINK GATES WITH A FLEXIBLE GROUNDING CABLE ATTACHED FROM THE GATE FABRIC TO THE FENCE FABRIC ON THE HINGE SIDE OF THE GATE.
11. NOT TO SCALE.

ORIGINAL STORED AT: ITD, Headquarters 3311 West State Boise, Idaho

ORIGINAL SIGNED BY: RYAN D. LANCASTER
DATE ORIGINAL SIGNED: JANUARY 31, 2013

REVISIONS

NO.	DATE	BY	NO.	DATE	BY	NO.	DATE	BY
1	1-97	MSM						
2	12-01	MSM						
3	1-04	MSM						
4	10-04	MSM						
5	12-12	RDL						

SCALES SHOWN ARE FOR 11" X 17" PRINTS ONLY

CADD FILE NAME: f2d_0213.std

DRAWING DATE: DECEMBER, 1993

IDAHO TRANSPORTATION DEPARTMENT

BOISE IDAHO

ORIGINAL SIGNED BY: LOREN THOMAS
HIGHWAYS PROGRAM OVERSIGHT ENGINEER
ORIGINAL SIGNED BY: TOM COLE
CHIEF ENGINEER

STANDARD DRAWING

CHAIN LINK FENCE
FENCE TYPE 4

REQUIRES SHEET 1 OF 2

English

STANDARD DRAWING NO.

F-2-D

SHEET 2 OF 2

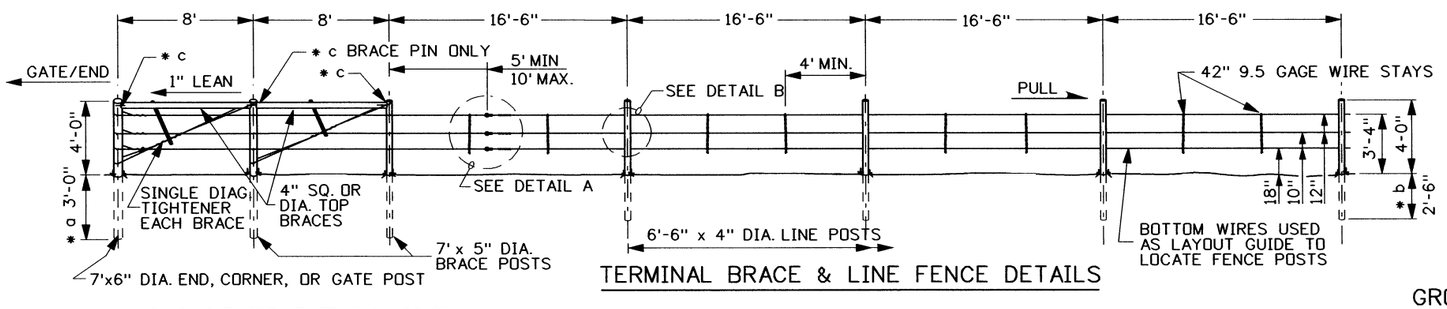

TERMINAL BRACE & LINE FENCE DETAILS

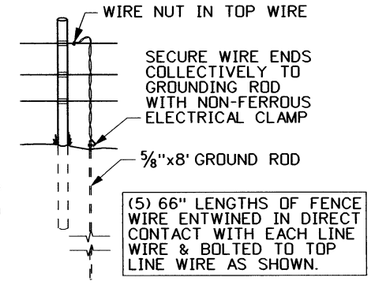

GROUNDING DETAIL

FENCE GROUNDING TABLE		
kV	* GROUNDING INTERVAL	FENCE DISTANCE FROM TRANSMISSION ℄
500	200'	<100'
500	500'	100' - 200'
345	400'	<100'
345	1000'	100' - 150'
>230	500'	50' - 100'
100-230	400'	WITHIN R/W
<100	1/4 MI.	WITHIN R/W

* FENCE SECTIONS THAT ARE LESS IN LENGTH THAN THE GROUNDING INTERVAL SHALL BE GROUNDED ONCE.

SUB-NOTES
* a DRIVEN DEPTH 36" (SEE CONCRETE BASE DETAIL & NOTE NO. 2).
* b DRIVEN DEPTH 30" (SEE CONCRETE BASE DETAIL & NOTE NO. 2).
* c BRACE PINS ARE 3/8" DIA. GALVANIZED STEEL, DRILL TIMBERS TO INSTALL OR 10" GALV. SPIKES MAY BE USED AT BRACE END POSTS.

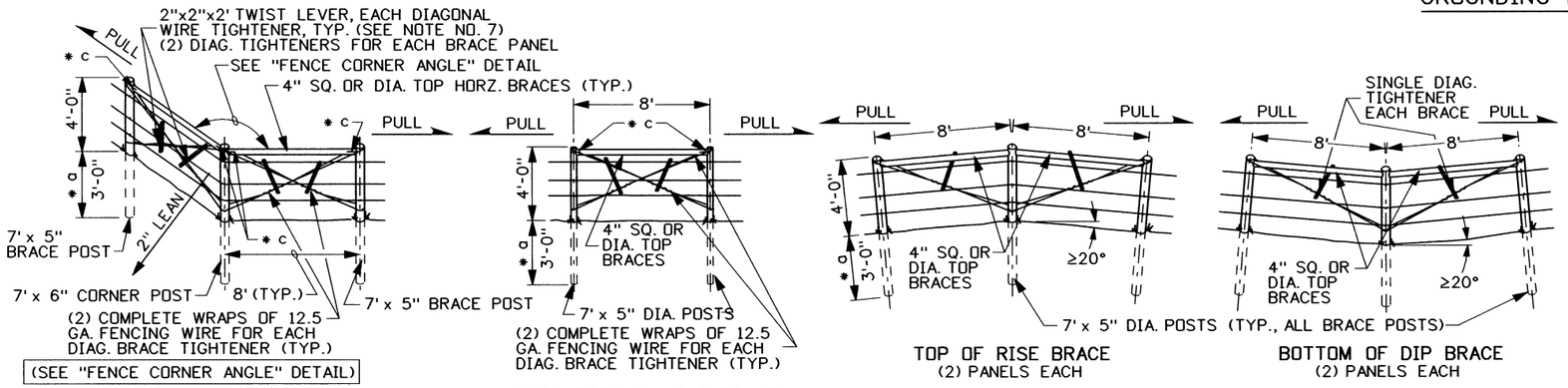

CORNER BRACE
(2) PANELS EACH

EVEN TERRAIN LINE BRACE
SINGLE PANEL

TOP OF RISE BRACE
(2) PANELS EACH

BOTTOM OF DIP BRACE
(2) PANELS EACH

BRACE DETAILS

NOTES

1. ALL WOODEN POSTS AND HORIZONTAL BRACES SHALL BE PRESSURE TREATED IN ACCORDANCE WITH AASHTO M 133. TIMBER DIAMETERS SHOWN SHALL BE MEASURED AT THE SMALL END. THE SMALL ENDS SHALL BE DRIVEN/SET IN THE SOIL.
2. END POSTS, BRACE POSTS AND LINE POSTS ARE RECOMMENDED TO BE MECHANICALLY DRIVEN INTO THE GROUND WHERE SOIL CONDITIONS PERMIT. WHERE SOIL CONDITIONS DO NOT PERMIT DRIVEN POSTS THE CONCRETE BASE SHALL BE INSTALLED (SEE CONCRETE BASE DETAIL).
3. TO ALLOW FOR EXPANSION AND CONTRACTION, DO NOT STAPLE THE WIRES TIGHT TO THE BRACE POSTS. THE STAPLES ARE 1 3/4" - 9 GAGE WITH SLASH CUT POINTS. THE STAPLES SHALL BE ZINC COATED IN ACCORDANCE WITH ASTM A 116, CLASS 1.
4. BRACE PINS, WIRE STAYS, SPIKES, TENSION INDICATOR SPRINGS, AND IN-LINE TIGHTENERS SHALL HAVE A ZINC COATING IN ACCORDANCE WITH ASTM A 116, CLASS 3.
5. ALL FENCE WIRE SHALL BE BARBLESS DOUBLE WEAVE 12.5 GAGE STEEL WITH A MINIMUM OF 57,000 PSI TENSILE STRENGTH. THE WIRE SHALL BE ZINC COATED IN ACCORDANCE WITH ASTM A 116, CLASS 3.
6 IN-LINE WIRE TIGHTENERS AND TENSION INDICATOR SPRINGS SHALL MEET THE FOLLOWING:
   a. IN-LINE WIRE TIGHTENERS AND TENSION INDICATOR SPRINGS SHALL BE USED WHEN CALLED FOR IN THE PLANS.
   b. THE IN-LINE WIRE TIGHTENERS AND TENSION INDICATOR SPRING SHALL BE A SEPARATE PAY ITEM.
   c. IN-LINE WIRE TIGHTENERS AND TENSION INDICATOR SPRINGS ARE TO BE USED AS A UNIT.
   d. TIGHTENERS ARE TO BE PLACED ON ALL THREE WIRE SETS. TIGHTENING FOR STRAIGHT RUNS SHOULD BE 80 TO 100 LBS. AND ON CRESTS AND DIPS SHOULD BE 50 TO 75 LBS. ROUNDED CORNERS ARE TIGHTENED THE SAME AS STRAIGHT RUNS.
   e. TIGHTENERS ARE TO BE PLACED 5' TO 10' FROM A BRACE.
   f. IN LINE WIRE TIGHTENERS SHALL BE INSTALLED BETWEEN EACH SET OF CORNER, EVEN TERRAIN LINE, AND RISE/DIP BRACES.
7. PROPER TENSION ON THE DIAGONAL BRACE TIGHTENERS IS TO BE ACCOMPLISHED BY TWISTING A MINIMUM OF 3 TO 5 TURNS. EACH DIAGONAL BRACE WIRE TIGHTENER SHALL CONSIST OF (2) COMPLETE WRAPS OF FENCE WIRE (THE WIRE TIE-OFF SHOULD BE OFFSET FROM THE POSITION OF THE TWIST LEVER). THE TWIST LEVER SHOULD BE SECURELY FASTENED AGAINST THE HORIZONTAL BRACE RAIL OR THE OPPOSING DIAGONAL BRACE TIGHTENER.
8. LINE WIRES SHOULD BE STAPLED TO THE BRACE POSTS ONLY AFTER TAKING UP PRELIMINARY TENSION OF APPROXIMATELY 50-80 LBS. ON EACH WIRE SET.
9. LINE WIRES SHALL BE STRUNG ON THE OUTSIDE (WILDLIFE SIDE) OF EVEN TERRAIN LINE BRACES AND RISE/DIP BRACES. LINE WIRES SHALL ALWAYS BE STRUNG ON THE EXTERIOR ANGLE SIDE OF CORNER BRACES.
10. THE MAXIMUM FENCE RUN BETWEEN BRACE PANELS SHALL BE 1320 FEET.
11. ALL WILDLIFE FENCE LINE WIRE SHALL BE GROUNDED ACCORDING TO THE "FENCE GROUNDING TABLE" ACCORDING TO THE METHOD SHOWN ON "GROUNDING DETAIL".
12. IN-LINE WIRE SPICES SHALL BE SPLICED ACCORDING TO THE METHOD SHOWN IN THE "WIRE SPLICES" DETAIL. WIRE TIE-OFFS AND TERMINAL ENDS MAY BE SPLICED OR WRAPPED.
13. NOT TO SCALE.

ROUNDED CORNER TABLE	
EXT. COR. ANGLE	MIN. NO. CORNER POSTS
0°-20°	3
>20°-40°	4
>40°-60°	5

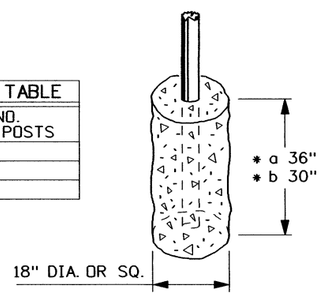

USE AT POSTS WHERE SOIL CONDITIONS DO NOT PERMIT DRIVEN POSTS

CONCRETE BASE

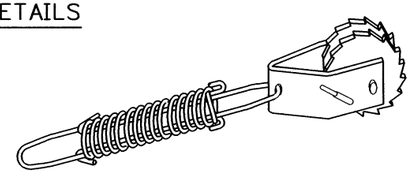

IN-LINE WIRE TIGHTENER & TENSION INDICATOR SPRING

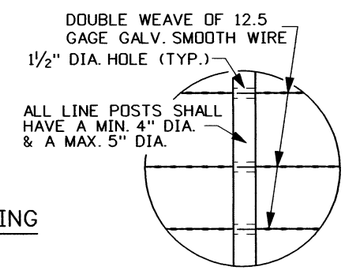

DETAIL B

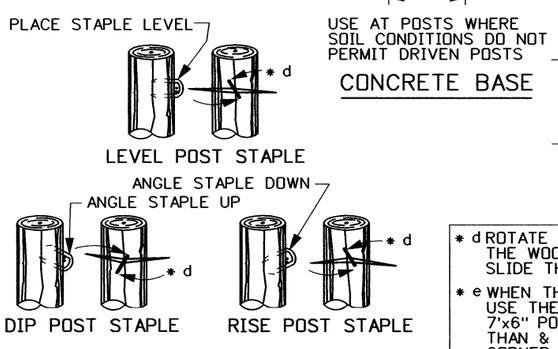

LEVEL POST STAPLE

DIP POST STAPLE

RISE POST STAPLE

BRACE STAPLING DETAILS

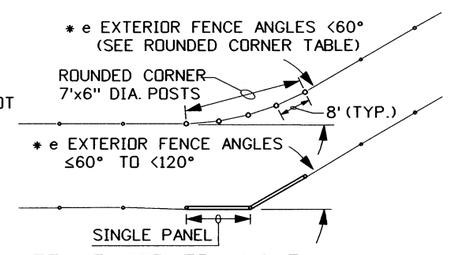

FENCE CORNER ANGLE

* d ROTATE STAPLE ON BRACE POSTS TO STRADDLE ACROSS THE WOOD GRAIN, ALLOW ENOUGH SPACE FOR WIRES TO SLIDE THROUGH THE DRIVEN BACK OF THE STAPLE.

* e WHEN THE EXTERIOR FENCE ANGLE IS 60° OR LESS, USE THE ROUNDED FENCE CORNER (SEE TABLE) WITH 7'x6" POSTS. FOR EXTERIOR FENCE ANGLES GREATER THAN & EQUAL TO 60° AND LESS THAN 120° USE (1) CORNER BRACE. FOR EXTERIOR ANGLES GREATER THAN 120° A COMBINATION (2) CORNER BRACES ARE REQUIRED.

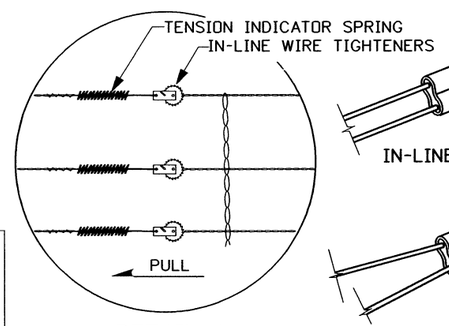

DETAIL A
(SEE NOTE NO. 6)

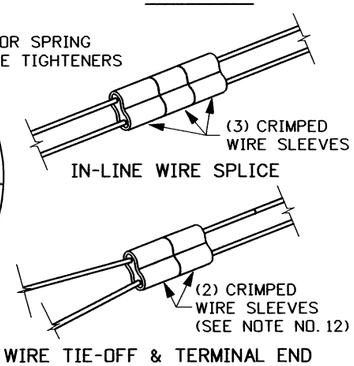

WIRE SPLICES

REVISIONS								
NO.	DATE	BY	NO.	DATE	BY	NO.	DATE	BY
1	10-05	MSM						

SCALES SHOWN ARE FOR 11" X 17" PRINTS ONLY

CADD FILE NAME f2e_1005.std

DRWG. ORIG. DATE: JANUARY, 2004

IDAHO TRANSPORTATION DEPARTMENT

BOISE IDAHO

ASSISTANT CHIEF ENGINEER (DEVELOPMENT)

CHIEF ENGINEER

STANDARD DRAWING

WILDLIFE FENCE
FENCE TYPE 9

English

STANDARD DRWG. NO.

F-2-E

SHEET 1 OF 1

PROFESSIONAL ENGINEER * LAND SURVEYOR REGISTERED 2240 10/17/05 STATE OF IDAHO MILFORD MILLER

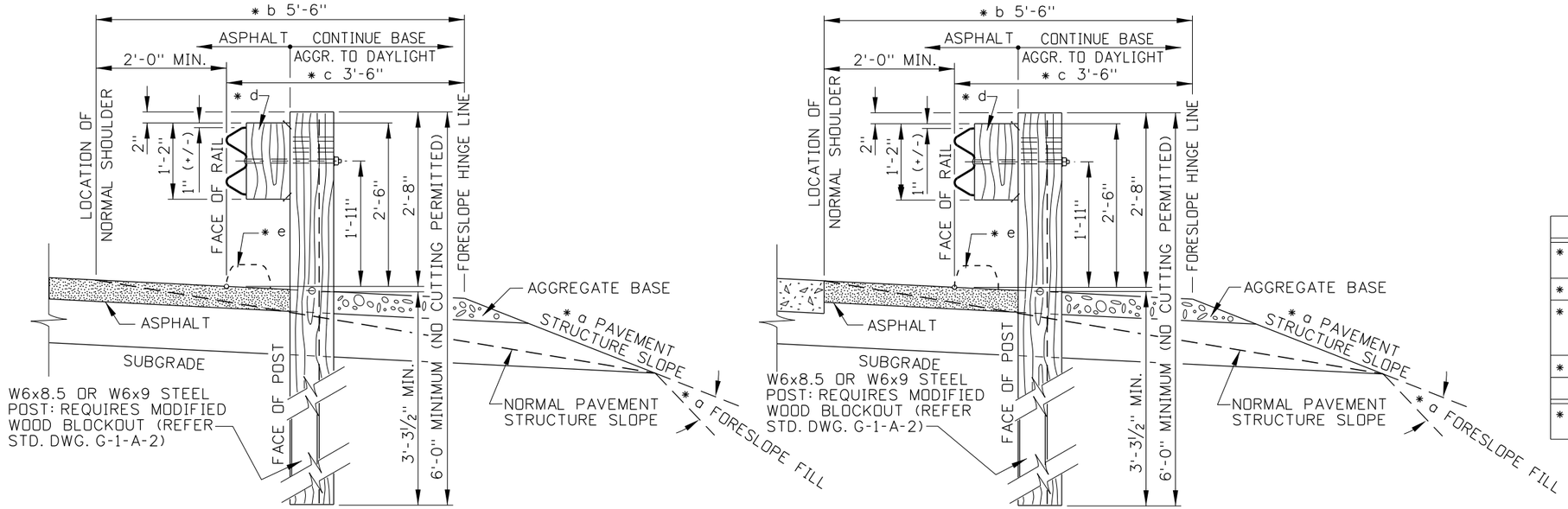

LOCATION OF GUARDRAIL WITH ASPHALT SHOULDER

LOCATION OF GUARDRAIL WITH CONCRETE SHOULDER

STANDARD GUARDRAIL & SLOPE TREATMENT - TYPE A INSTALLATION

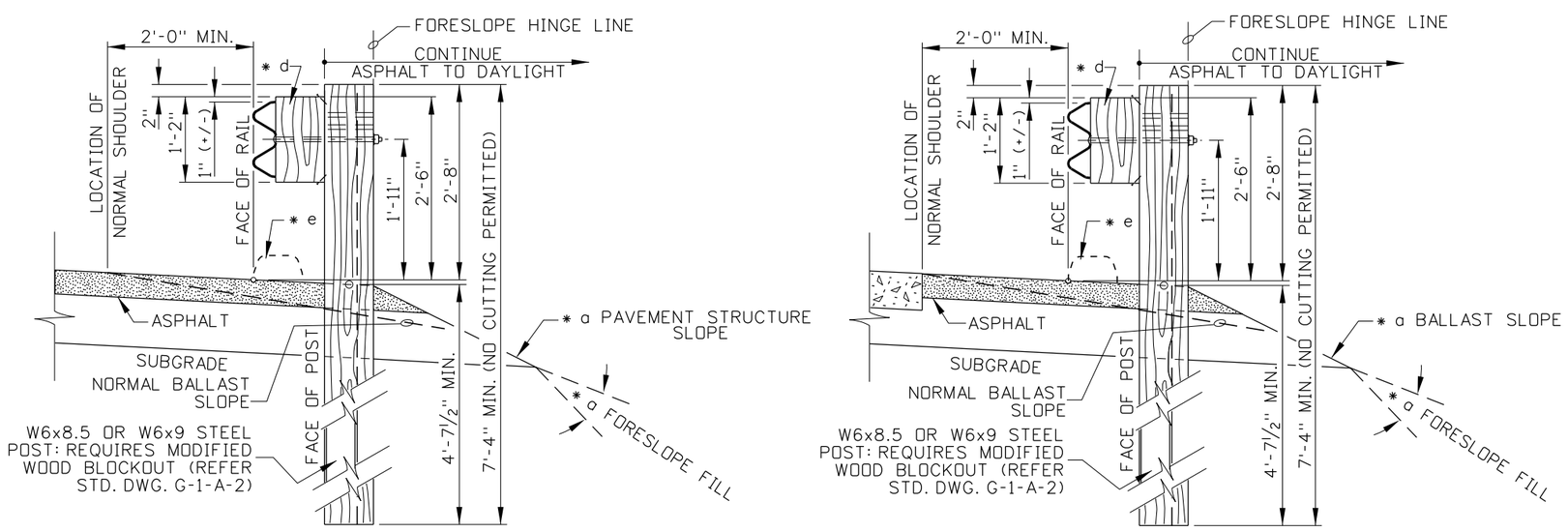

LOCATION OF GUARDRAIL WITH ASPHALT SHOULDER

LOCATION OF GUARDRAIL WITH CONCRETE SHOULDER

7'-4" POST ALTERNATE & SLOPE TREATMENTS - TYPE B INSTALLATION

SLOPE REQUIREMENTS (MINIMUM)
* a PAVEMENT STRUCTURE SLOPE SAME AS FORESLOPE BUT NOT STEEPER THAN 2:1.
* b 4'-8" MIN. IN DIFFICULT TERRAIN.
* c 1'-0" MIN. FROM BACK OF POST TO FORESLOPE HINGE LINE IN DIFFICULT TERRAIN.
* d BLOCKOUT TYPE, SEE STD. DWG. G-1-A-3
USE OF CURB
* e SEE NOTE NO. 5 (REFER TO STD. DWG. G-1-A-2)

NOTES

1. THE 6'-0" STANDARD POST DESIGN (TYPE A INSTALLATION) SHALL BE INSTALLED UNLESS THE 7'-4" POST ALTERNATE DESIGN (TYPE B INSTALLATION) IS SPECIFIED ON THE PLANS. TYPE B INSTALLATION SHALL ONLY BE USED WHEN ALL OTHER REMEDIES HAVE BEEN ELIMINATED BECAUSE OF ENVIRONMENTAL CONSIDERATIONS OR DIFFICULT ROADSIDE CONDITIONS. WHEN USED THE FOLLOWING CONDITIONS MUST BE MET:

   I. APPROVAL OF USE IN CONCEPT REVIEW PROCESS.
   THE BALLAST AND FORESLOPE SHALL BE 2:1 OR FLATTER BEGINNING AT THE BACK OF THE GUARDRAIL POST.
   II. THE SOIL FOUNDATION OF EACH POST SHALL BE COMPACTED TO A MINIMUM OF 95% OF STANDARD DENSITY.
   III. SURFACING SHALL CONTINUE BEHIND THE POST AND IF DISTURBED DURING INSTALLATION IT SHALL BE REPAIRED OR REPLACED.
   IV. ON ROADS SURFACED WITH A BST, A 0.2' MIN. THICKNESS OF ASPHALT SURFACING SHALL BE PLACED AROUND EACH POST AND A
   V. 2'-0" MINIMUM PLACED LONGITUDINALLY WITH GUARDRAIL.

2. THE SLOPE OF THE SURFACE BETWEEN THE EDGE OF THE SHOULDER AND THE HINGE LINE SHOULD BE THE SAME AS THE ADJACENT ROADWAY SLOPE.

3. THE GUARDRAIL POSTS SHALL BE PLUMBED AND SET VERTICALLY. REFER TO SECTION 612 - GUARDRAIL, OF THE ITD STANDARD SPECIFICATIONS FOR HIGHWAY CONSTRUCTION.

4. GUARDRAIL POST SPACING SHALL BE 6'-3" C.T.C. UNLESS OTHERWISE SHOWN.

5. WHEN CURB IS CALLED FOR THE CURB FACE SHALL BE LOCATED ALONG THE FACE OF RAIL. REFER TO STANDARD DRAWING G-1-A-2 FOR CURB INSTALLATION DETAILS AND STANDARD DRAWING H-1 FOR CURB TYPES.

6. NOT TO SCALE.

ORIGINAL STORED AT: ITD, Headquarters 3311 West State Boise, Idaho

ORIGINAL SIGNED BY: RYAN SCOT CARNIE DATE ORIGINAL SIGNED: AUGUST 26, 2011

REVISIONS

NO.	DATE	BY	NO.	DATE	BY	NO.	DATE	BY	NO.	DATE	BY
1	3-89	GB	6	1-97	WC	11	8-00	MSM	15	4-06	MSM
2	3-90	GB	7	6-97	MSM	12	6-01	MSM	16	8-10	MGL
3	6-90	GB	8	7-98	RG	13	10-02	MSM	17	8-11	RSC
4	7-92	MSM	9	2-00	MSM	14	12-03	MSM			
5	2-96	MSM	10	6-00	MSM	15	10-04	MSM			

SCALES SHOWN ARE FOR 11" X 17" PRINTS ONLY

CADD FILE NAME: g1a10811.std

DRAWING DATE: MAY, 1989

IDAHO TRANSPORTATION DEPARTMENT

BOISE IDAHO

ORIGINAL SIGN BY: LOREN THOMAS
HIGHWAYS PROGRAM OVERSIGHT ENGINEER

ORIGINAL SIGN BY: TOM COLE
CHIEF ENGINEER

STANDARD DRAWING

GUARDRAIL SLOPE TREATMENT TYPES A & B

English

STANDARD DRAWING NO. G-1-A-1

SHEET 1 OF 1

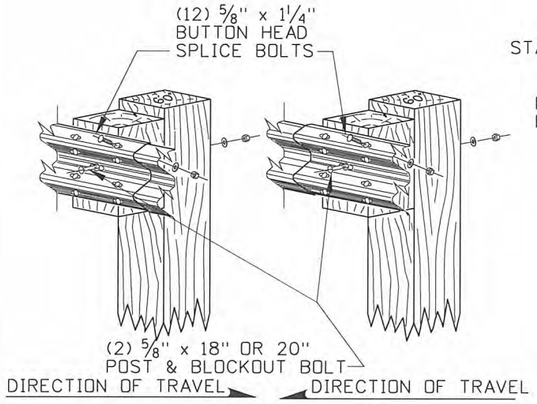

W-BEAM LAPPING DETAILS

(STANDARD WOOD POST INSTALLATION SHOWN)

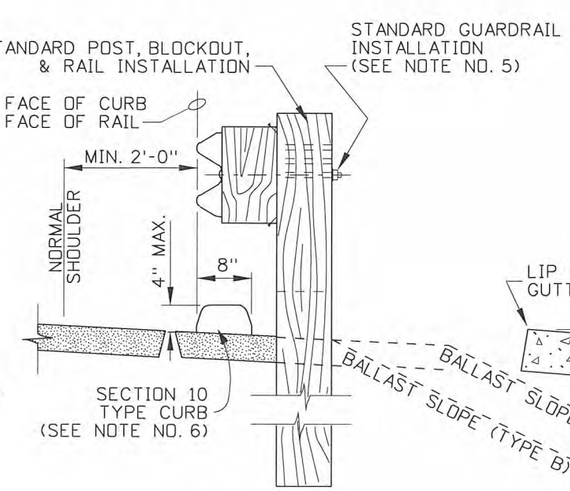

CURB ONLY

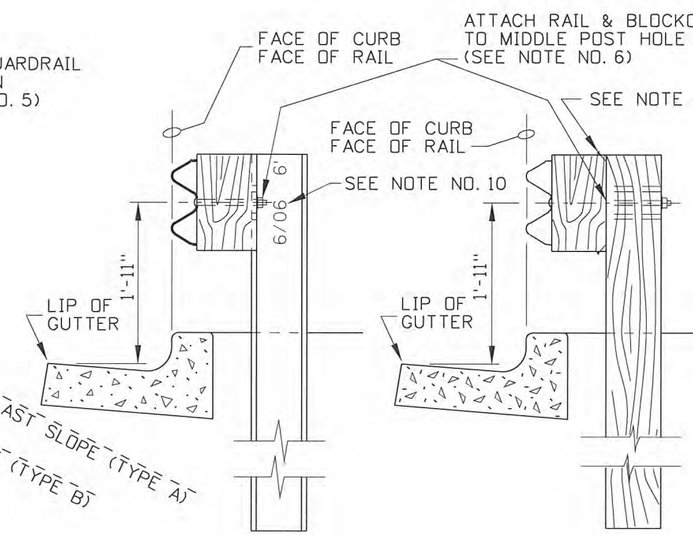

STEEL POST

WOOD POST

CURB & GUTTER INSTALLATION WITH GUARDRAIL

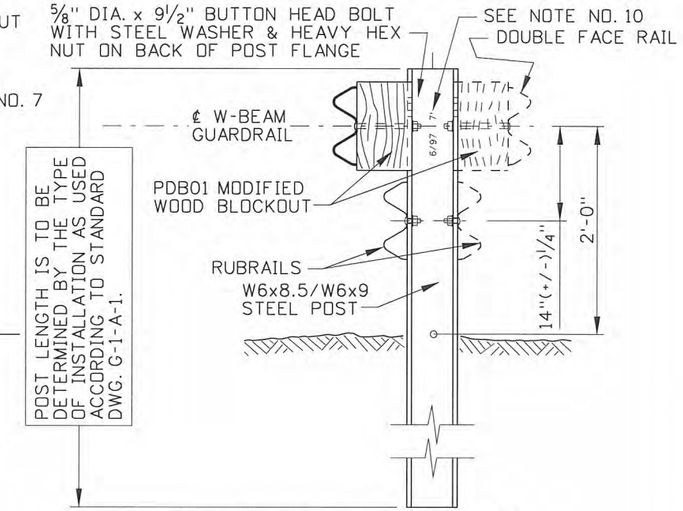

MEDIAN BARRIER DETAIL

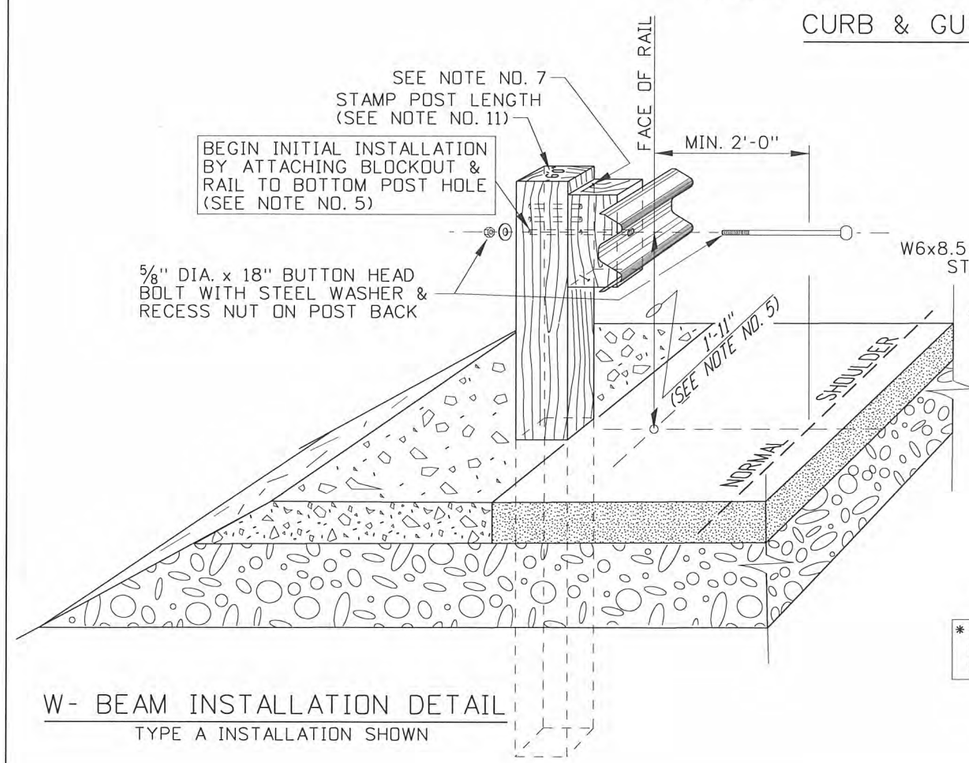

W- BEAM INSTALLATION DETAIL

TYPE A INSTALLATION SHOWN

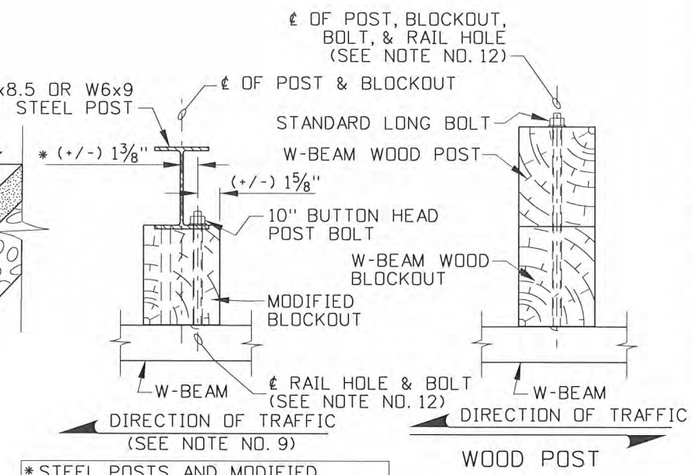

WOOD POST

* STEEL POSTS AND MODIFIED BLOCKOUTS ARE OFFSET (+/-) 1 3/8" FROM THE RAIL BOLTING HOLE.

STEEL POST

W-BEAM BOLTING DETAILS

NOTES

1. STEEL GUARDRAIL POSTS SHALL CONFORM TO THE "SPECIFICATIONS" OF THE WIDE-FLANGE GUARDRAIL POST (PWE01-04) IN THE "A GUIDE TO STANDARDIZED HIGHWAY BARRIER HARDWARE".
2. ALL W-BEAM METAL GUARDRAIL WILL BEGIN AND END WITH A TERMINAL.
3. A SINGLE W-BEAM GUARDRAIL INSTALLATION: POSTS MAY BE WOOD OR STEEL, HOWEVER THE LINE POSTS SHALL BE CONTIGUOUS OF EITHER WOOD OR STEEL. WOOD POSTS SHALL BE OF CONTIGUOUS SIZES SUCH AS, 6"x8" POSTS WITH 6"x8" BLOCKOUTS OR WITH 8"x8" POSTS WITH 8"x8" BLOCKOUTS. BLOCKOUT MATERIAL MAY VARY (REFER TO STD. DWG. G-1-A-3).
4. W-BEAM METAL GUARDRAIL SHALL BE LAPPED IN THE DIRECTION OF TRAFFIC TO PREVENT RAIL SNAGGING.
5. INITIAL RAIL AND BLOCKOUT BOLTING TO THE POST SHALL BEGIN IN THE LOWEST POST HOLE FOR BOTH WOOD AND STEEL POSTS EXCEPT FOR URBAN CURB AND GUTTER INSTALLATIONS (SEE NOTE NO. 7). SUBSEQUENTLY THE RAIL AND BLOCKOUT SHOULD BE RAISED IN CONJUNCTION WITH THE RISE OF THE PAVEMENT SURFACE DUE TO OVERLAYS AND SEAL COATS. NORMALLY RAISING SHOULD OCCUR WHEN THE VERTICAL DISTANCE IS LESS THAN 1'-9" ALONG THE FACE OF RAIL FROM THE CENTERLINE OF BOLT TO ROADWAY SURFACE.
6. WHEN CURB AND GUTTER IS USED IN AN URBAN SETTING WITH W-BEAM GUARDRAIL, BOLT THE RAIL IN THE MIDDLE POST HOLE. ON STANDARD GUARDRAIL INSTALLATIONS THE TYPE SECTION 10 CURB IS USED EXCLUSIVELY.
7. THE WOODEN BLOCKOUTS SHALL BE TOE-NAILED TO THE WOODEN POST WITH 16d GALVANIZED NAILS TO RESTRICT BLOCK ROTATION.
8. GUARDRAIL POST SPACING SHALL BE 6'-3" C.T.C. UNLESS OTHERWISE SHOWN.
9. POST BOLTS FOR THE MODIFIED BLOCKOUT AND STEEL POST SHALL BE PLACED ON WEB HOLE ON THE APPROACHING TRAFFIC SIDE.
10. WHEN STEEL GUARDRAIL POSTS ARE INSTALLED, THE DATE (MONTH/YEAR) AND POST LENGTH SHALL BE STAMPED IN A CONSPICUOUS PLACE NEAR THE TOP AND BETWEEN THE WEBS OF THE POST. THE CHARACTERS SHALL BE 1/4" TO 3/8" IN HEIGHT.
11. WOODEN POSTS SHALL BE STAMPED OR SCRIBED WITH THE LENGTH (EITHER FEET OR INCHES IS ACCEPTABLE) OF THE POST ON THE TOP SURFACE. THE STAMPED LETTERING SHALL BE APPROXIMATELY 1 1/2" HIGH AND 1/4" DEEP. IF THE LETTERING IS DISTURBED DURING INSTALLATION IT SHALL BE RE-STAMPED.
12. ALL POST SPACING MEASUREMENTS ARE MADE ALONG THE (BACK OF RAIL) FROM CENTERLINE OF THE USED BOLT HOLE TO CENTERLINE OF THE USED BOLT HOLE.
13. NOT TO SCALE.

REVISIONS								
NO.	DATE	BY	NO.	DATE	BY	NO.	DATE	BY
1	6-00	MSM	6	5-06	MSM			
2	6-01	MSM	7	8-10	MGL			
3	12-01	MSM						
4	9-03	MSM						
5	10-04	MSM						

SCALES SHOWN ARE FOR 11" X 17" PRINTS ONLY

CADD FILE NAME: glo21210.std

DRAWING DATE: JUNE, 1997

IDAHO TRANSPORTATION DEPARTMENT

BOISE IDAHO

ASSISTANT CHIEF ENGINEER (DEVELOPMENT)

CHIEF ENGINEER

STANDARD DRAWING

W-BEAM GUARDRAIL INSTALLATION ASSEMBLIES

English

STANDARD DRAWING NO.

G-1-A-2

SHEET 1 OF 1

PROFESSIONAL ENGINEER REGISTERED 6506 STATE OF IDAHO TED E. MASON 6/20/10

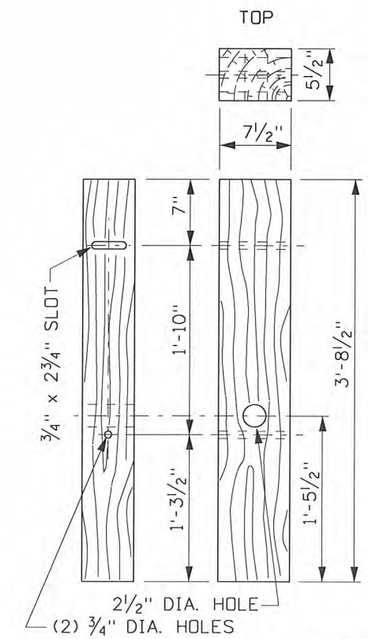

MODIFIED BCT TIMBER POST

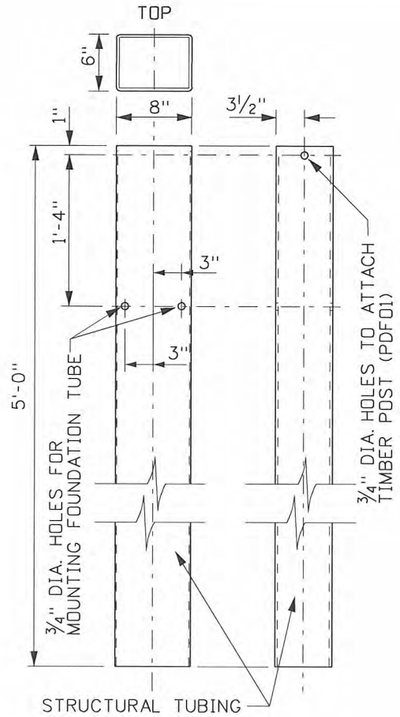

FOUNDATION TUBE

ITEM NO. PTE05

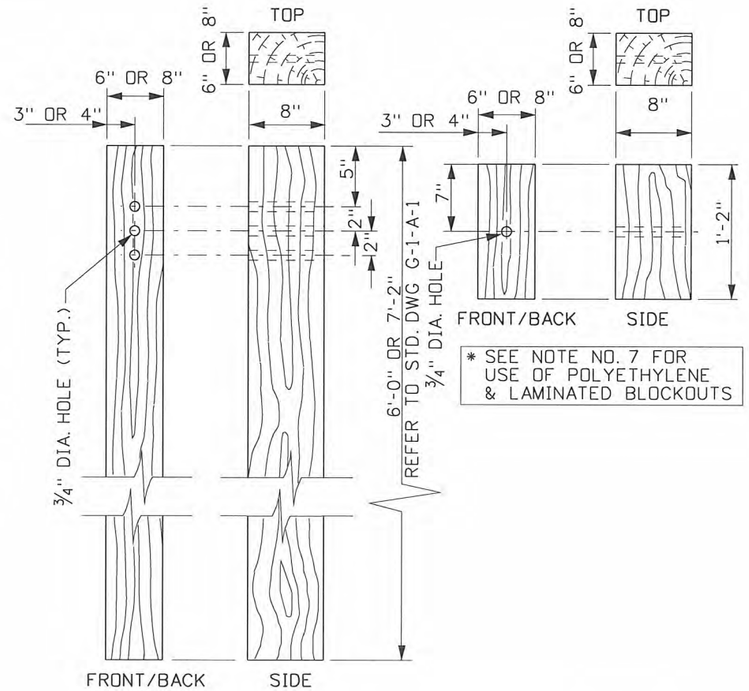

* WOODEN GUARDRAIL POST & BLOCKOUT

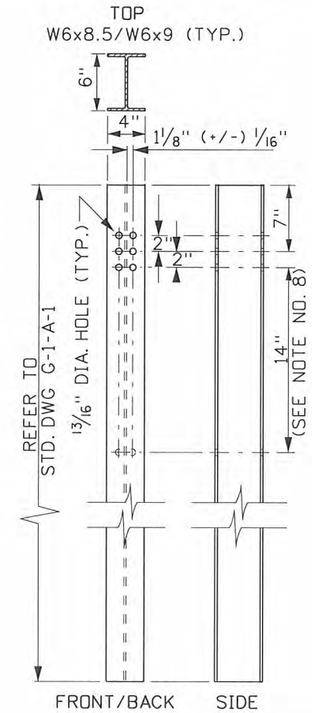

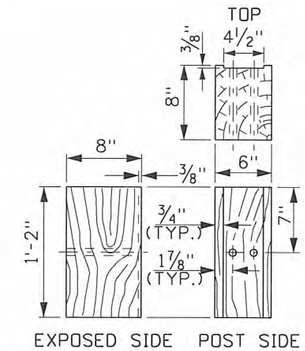

* STEEL GUARDRAIL POST & MODIFIED BLOCKOUT

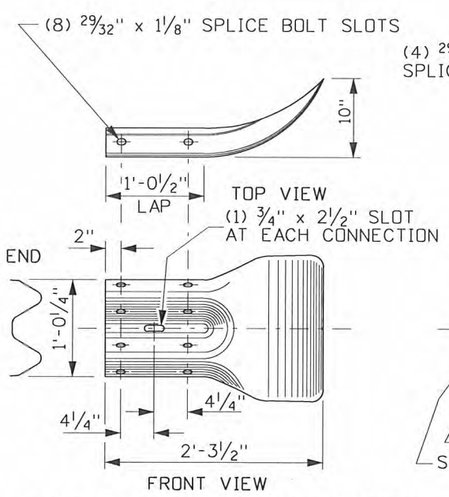

W-BEAM END SECTION (FLARED)

ITEM NO. RWE01a

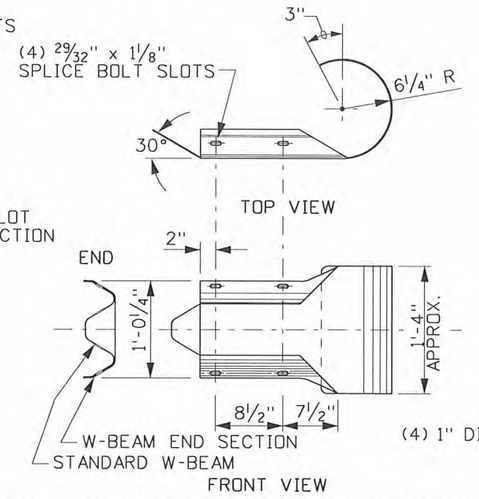

W-BEAM END SECTION (ROUNDED)

ITEM NO. RWE03a

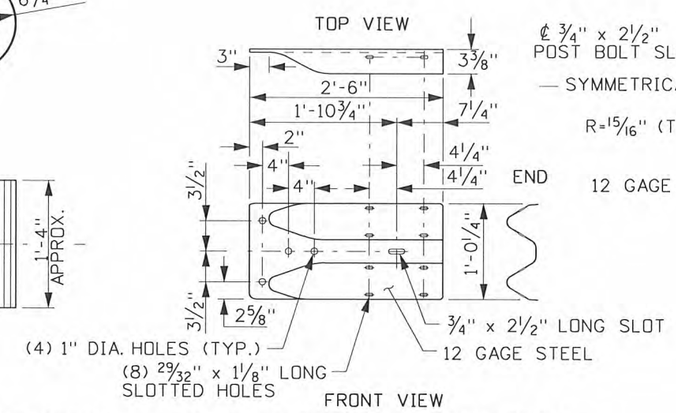

W-BEAM TERMINAL CONNECTOR

ITEM NO. RWE02a

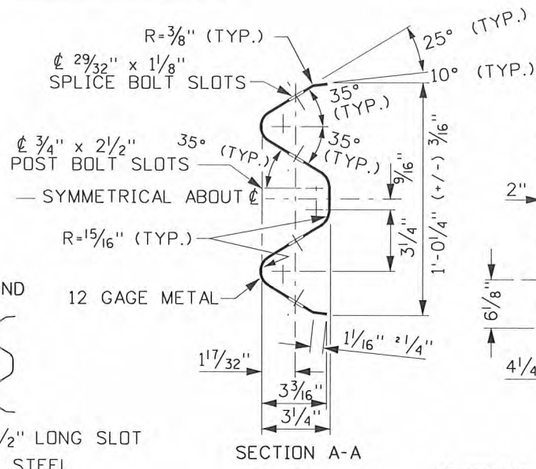

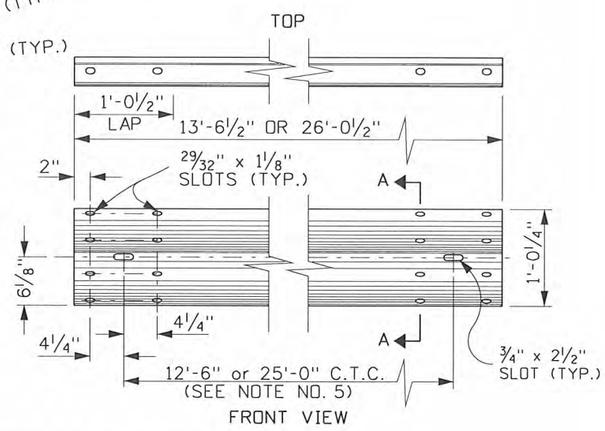

W-BEAM RAIL DETAILS

ITEM NO. RWM02a-b

REVISIONS								
NO.	DATE	BY	NO.	DATE	BY	NO.	DATE	BY
1	6-96	MSM	5	12-04	MSM			
2	6-97	MSM	6	5-06	MSM			
3	7-00	MSM	7	5-07	MSM			
4	12-01	MSM	8	11-08	JRV			
5	6-04	MSM	9	10-10	PLR			

SCALES SHOWN ARE FOR 11" X 17" PRINTS ONLY

CADD FILE NAME: g1a31010.std

DRAWING DATE: JUNE, 1996

IDAHO TRANSPORTATION DEPARTMENT

BOISE IDAHO

ASSISTANT CHIEF ENGINEER (DEVELOPMENT)

CHIEF ENGINEER

STANDARD DRAWING

W-BEAM GUARDRAIL POSTS, BLOCKOUTS, & HARDWARE

REQUIRES SHEET 2 OF 2

English

STANDARD DRAWING NO.

G-1-A-3

SHEET 1 OF 2

PROFESSIONAL ENGINEER REGISTERED 6506 10/26/2010 STATE OF IDAHO TED E. MASON

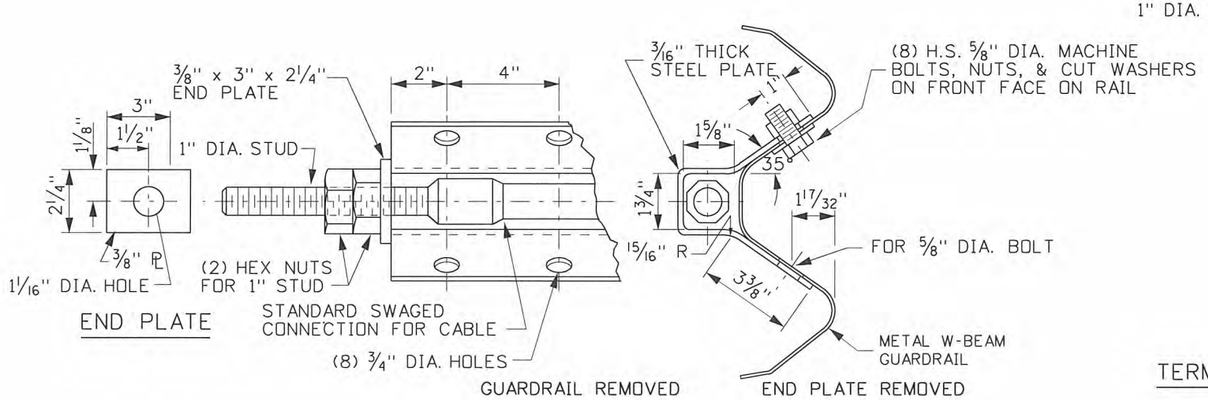

END PLATE

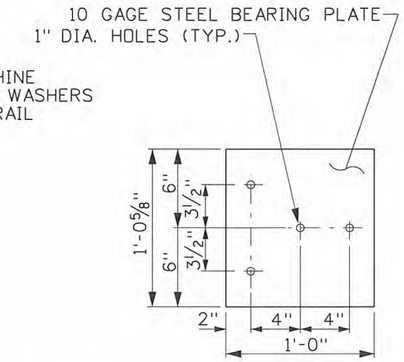

TERMINAL CONNECTOR BEARING PLATE
ITEM NO. FPB02

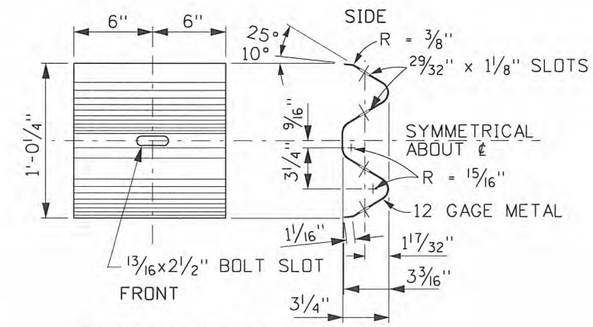

W-BEAM BACK-UP PLATE
ITEM NO. RWB01a-b

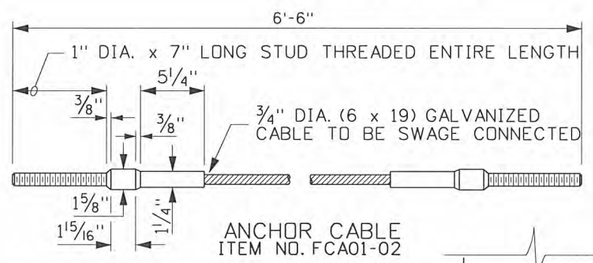

ANCHOR CABLE
ITEM NO. FCA01-02

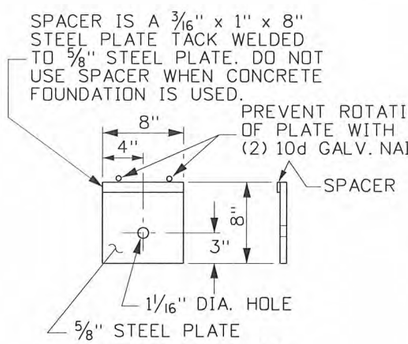

BCT BEARING PLATE
ITEM NO. F-36-79)

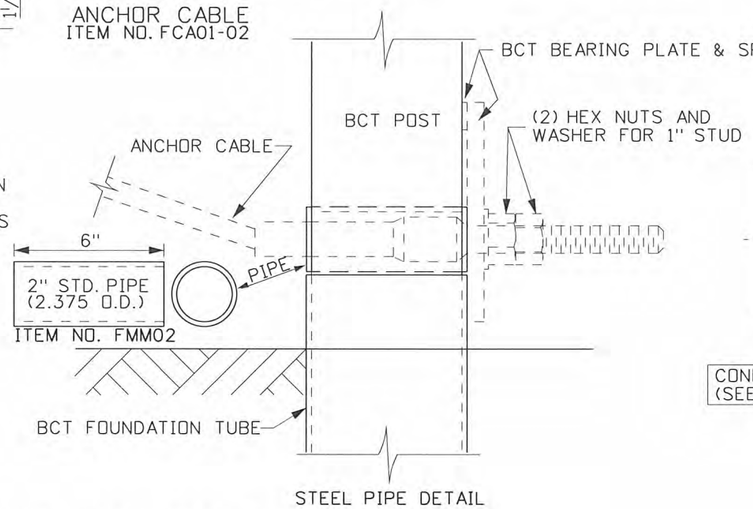

ITEM NO. FMM02

STEEL PIPE DETAIL

ANCHOR PLATE DETAILS

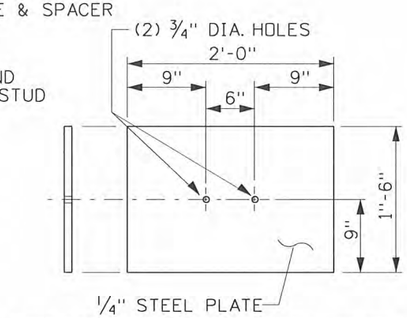

CONNECTS TO BCT FOUNDATION TUBE (SEE NOTE NOS. 9 & 10)

BCT SOIL PLATE
ITEM NO. PLS03

NOTES

1. ALL GUARDRAIL AND ACCESSORIES SHALL CONFORM TO THE "A GUIDE TO STANDARDIZED HIGHWAY BARRIER HARDWARE".
2. W-BEAM RAIL AND TERMINAL SECTIONS SHALL BE GALVANIZED IN ACCORDANCE WITH AASHTO M180, CLASS A, TYPE 2 WITH THE EXCEPTION THAT ALL RAIL AND TERMINAL SECTIONS SHALL BE GALVANIZED AFTER FABRICATION WITH FABRICATION TO INCLUDE FORMING, CUTTING, SHEARING, PUNCHING, DRILLING BENDING, WELDING AND RIVETING.
3. NO TERMINAL HARDWARE OR TERMINAL ACCESSORY SHALL BE FIELD OR OTHERWISE MODIFIED. SLIGHT FIELD FITTING MODIFICATIONS ARE ALLOWED ON STANDARD GUARD-RAIL INSTALLATIONS. ANY DRILLING, CUTTING (NOT BY HEAT), OR PUNCHING TO STANDARD GUARDRAIL ITEMS SHALL BE PAINTED WITH TWO COATS OF FORMULA 14-82 ZINC SILICATE PAINT.
4. TIMBER POSTS AND BLOCKS SHALL BE TREATED. REFER TO SECTION 710 - TIMBER AND PRESERVATIVES, OF THE "ITD STANDARD SPECIFICATIONS FOR HIGHWAY CONSTRUCTION".
5. 12'-6" W-BEAM METAL GUARDRAIL LENGTHS SHALL BE USED UNLESS OTHERWISE SPECIFIED.
6. W-BEAM METAL GUARDRAIL SECTIONS SHALL BE PRECURVED FOR CURVES LESS THAN 150 FT. RADII (RADIUS TO FACE OF RAIL).
7. W-BEAM GUARDRAIL POSTS MAY BE WOOD OR STEEL; HOWEVER, POSTS AND BLOCKOUTS MAY BE MADE OF POLYETHYLENE PLASTIC, WOOD, LAMINATED WOOD, OR OTHER PRODUCTS PROVIDED THEY ARE LISTED IN AND USED ACCORDING TO THE IDAHO TRANSPORTATION DEPARTMENT'S "QUALIFIED PRODUCTS LIST".
8. THE POST HOLE(S) FOR RUBRAIL ON THE W6x8.5 OR W6x9 POST ARE NECESSARY ONLY WHEN A RUBRAIL IS TO BE INSTALLED.
9. THE BCT SOIL PLATE IS TO BE USED WITH THE BCT FOUNDATION TUBE. IT IS TO BE ATTACHED WITH BOLTS. THE PLATE SHALL BE INSTALLED WHEN THE ENGINEER DETERMINES THAT FIELD CONDITIONS WARRANTS ITS USE.
10. SOIL PLATES SHALL CONFORM TO ASTM A36 AND STRUCTURAL TUBING TO ASTM A500. WELDING SHALL MEET ALL REQUIREMENTS OF THE AMERICAN WELDING SOCIETY D1.1.
11. ALL WOODEN BREAKAWAY POSTS AND BLOCKOUTS WITH DRILLED HOLES SHALL BE PRESERVATIVE TREATED PRIOR TO INSTALLATION. PRESERVATIVE TREATMENT SHALL BE IN ACCORDANCE WITH AASHTO M133 AND WITH ITD STANDARD SPECIFICATIONS.
12. NOT TO SCALE.

REVISIONS

NO.	DATE	BY	NO.	DATE	BY	NO.	DATE	BY
1	6-96	MSM	5	12-04	MSM			
2	6-97	MSM	6	5-06	MSM			
3	7-00	MSM	7	5-07	MSM			
4	12-01	MSM	8	11-08	JRV			
5	6-04	MSM	9	10-10	PLR			

SCALES SHOWN ARE FOR 11" X 17" PRINTS ONLY

CADD FILE NAME: g1a31210.std

DRAWING DATE: JUNE, 1996

IDAHO TRANSPORTATION DEPARTMENT

BOISE IDAHO

ASSISTANT CHIEF ENGINEER (DEVELOPMENT)

CHIEF ENGINEER

STANDARD DRAWING

W-BEAM GUARDRAIL POSTS, BLOCKOUTS, & HARDWARE

REQUIRES SHEET 1 OF 2

English

STANDARD DRAWING NO.

G-1-A-3

SHEET 2 OF 2

PROFESSIONAL ENGINEER REGISTERED 6506 STATE OF IDAHO TED E. MASON 12/06/2010

W-BEAM:
6"x8" WOOD POST & 6"x8" BLOCKOUT (1'-6)
8"x8" WOOD POST & 8"x8" BLOCKOUT (1'-6")
STEEL POST & MODIFIED BLOCKOUT (10")

THRIE BEAM:
8"x8" WOOD POST & 8"x8" BLOCKOUT (1'-6")
STEEL POST & MODIFIED BLOCKOUT (10")

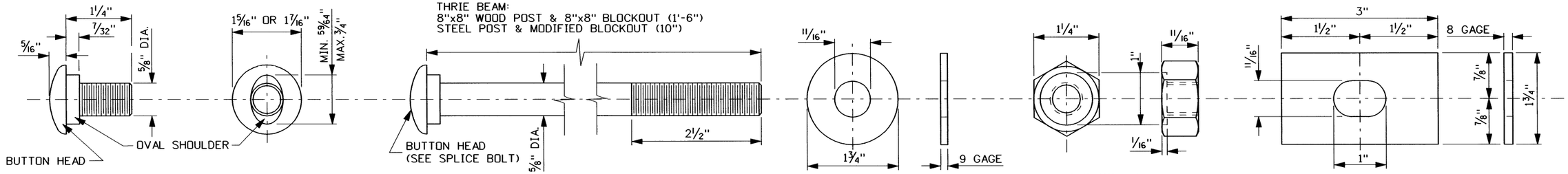

RAIL SPLICE BUTTON HEAD RAIL BOLT

WOOD POST BUTTON HEAD BOLT

ROUND WASHER

RECESS NUT

NOTE: RECTANGULAR WASHER USED ONLY ON SPECIFIC TERMINAL INSTALLATIONS. DO NOT USE ON REGULAR GUARDRAIL INSTALLATIONS

RECTANGULAR WASHER
(F-12-73)

BOLTING HARDWARE

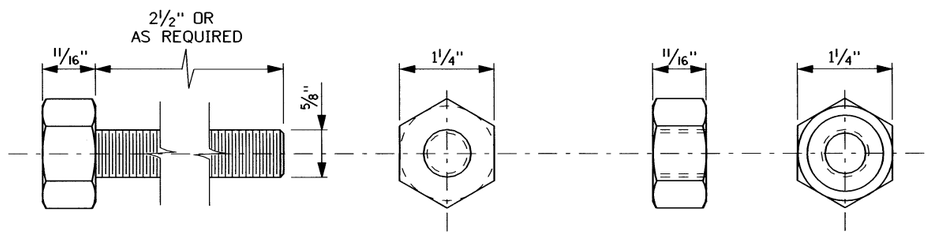

HEX BOLT

HEX NUT

STEEL POST BOLTING HARDWARE

ITEM NO. FBX16a

NOTES

1. ALL GUARDRAIL BOLTING HARDWARE AND ACCESSORIES SHALL CONFORM TO THE SPECIFICATIONS AS INDICATED IN THE AASHTO "A GUIDE TO STANDARDIZED HIGHWAY BARRIER HARDWARE".
2. THE BOLTING HARDWARE SHOWN IS USED FOR BOTH W-BEAM AND THRIE BEAM INSTALLATIONS.
3. NOT TO SCALE.

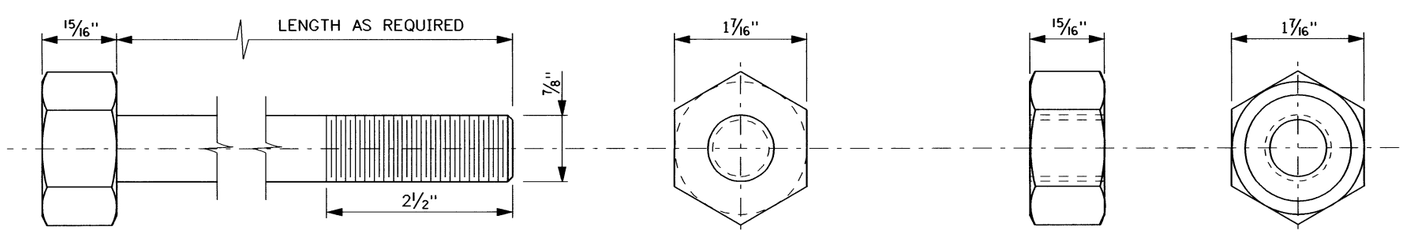

HEX BOLT

HEX NUT

HIGH STRENGTH BOLTING HARDWARE

ITEM NO. FBX16b-36b

REVISIONS								
NO.	DATE	BY	NO.	DATE	BY	NO.	DATE	BY

SCALES SHOWN ARE FOR 11" X 17" PRINTS ONLY

CADD FILE NAME g1a40406.std

DRWG. ORIG. DATE: APRIL, 2006

IDAHO TRANSPORTATION DEPARTMENT

BOISE IDAHO

ASSISTANT CHIEF ENGINEER (DEVELOPMENT)

CHIEF ENGINEER

STANDARD DRAWING

GUARDRAIL BOLTING HARDWARE FOR W-BEAM & THRIE BEAM

English

STANDARD DRWG. NO.

G-1-A-4

SHEET 1 OF 1

PROFESSIONAL ENGINEER & LAND SURVEYOR REGISTERED 2240 4/26/06 STATE OF IDAHO MILFORD MILLER

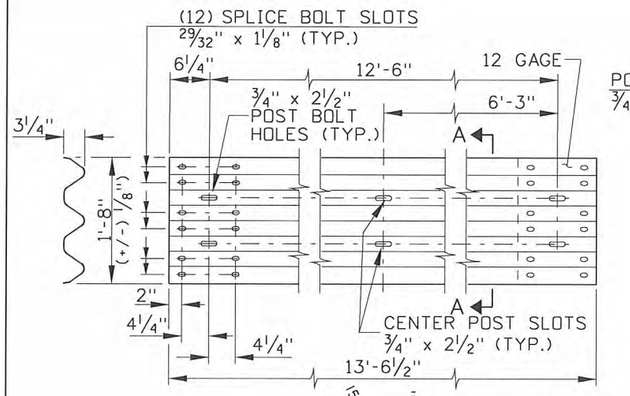

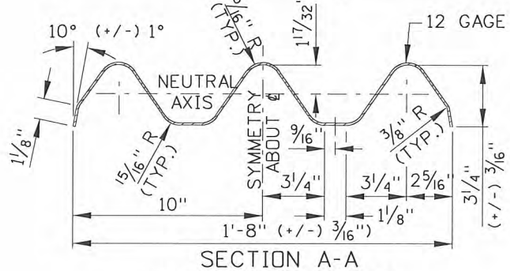

SECTION A-A

THRIE BEAM RAIL

ITEM NO. RTM01a-02b

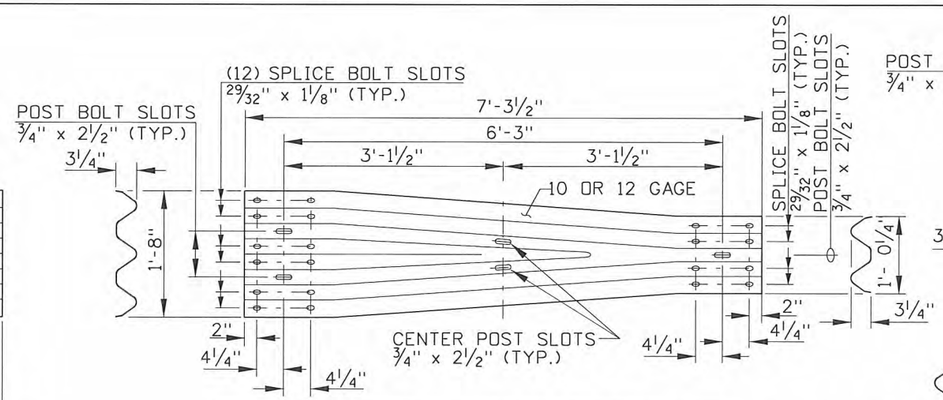

NOTE: THE CENTER POST OF THE SYMMETRICAL TRANSITION ELEMENT REQUIRES A MODIFIED BLOCKOUT WHICH IS DETAILED ON STD. DWG. G-1-E

SYMMETRICAL TRANSITION ELEMENT
(ITEM NO. RWT01a-b)

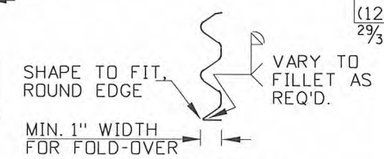

SECTION B-B

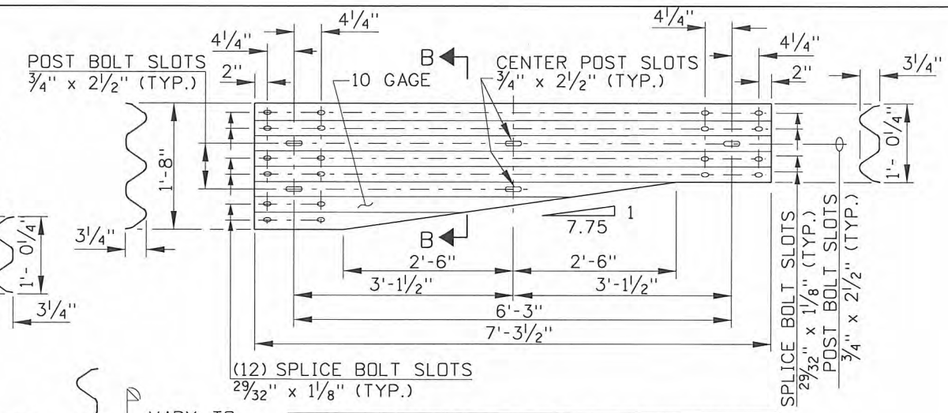

NOTE: THE CENTER POST OF THE ASYMMETRICAL TRANSITION ELEMENT REQUIRES THE TOP TO BE TRIMMED TO MATCH THE RAIL TOP

ASYMMETRICAL TRANSITION ELEMENT
(SEE NOTE NO. 7)

THRIE BEAM TO W-BEAM TRANSITION SECTIONS

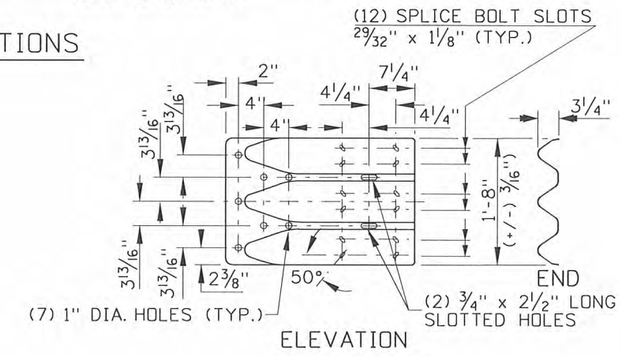

ELEVATION

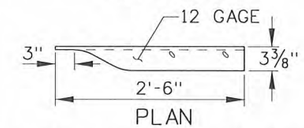

PLAN

THRIE BEAM TERMINAL CONNECTOR DETAILS

(ITEM NO. RTE01b)

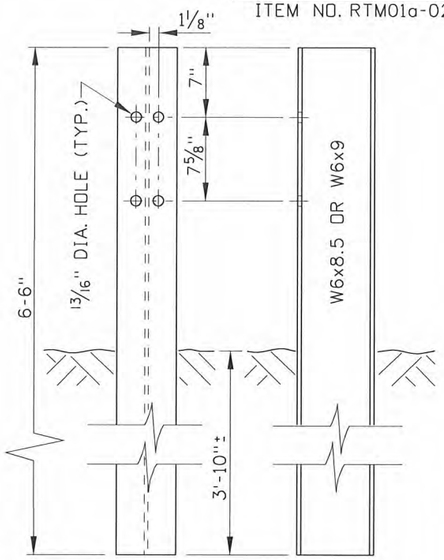

FRONT/BACK SIDE

THRIE BEAM STANDARD STEEL POST

NCHRP 350,TL-3

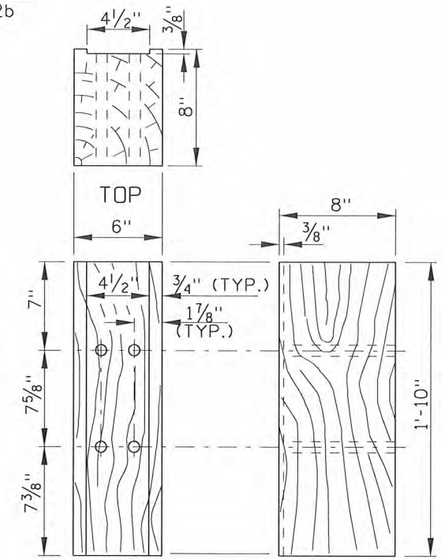

FRONT SIDE

THRIE BEAM STEEL POST BLOCKOUT

NCHRP 350,TL-3

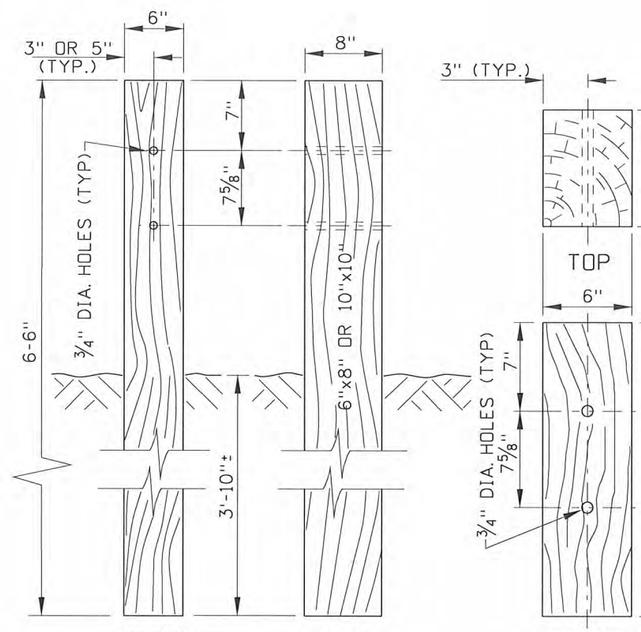

FRONT SIDE

THRIE BEAM STANDARD WOOD POST

NCHRP 350,TL-3

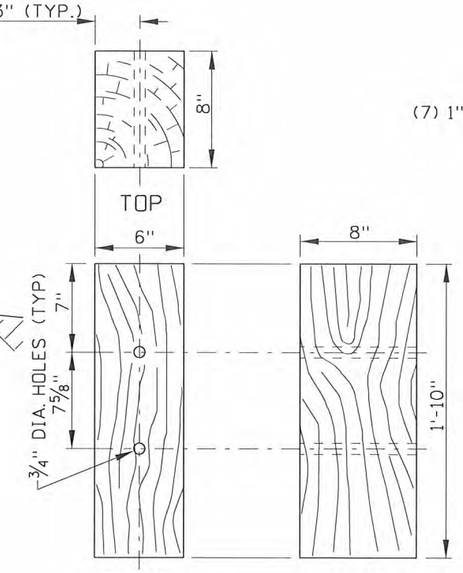

FRONT SIDE

THRIE BEAM WOOD POST BLOCKOUT

NCHRP 350,TL-3

REVISIONS								
NO.	DATE	BY	NO.	DATE	BY	NO.	DATE	BY
1	5-07	MSM						
2	10-10	PLR						

SCALES SHOWN ARE FOR 11" X 17" PRINTS ONLY

CADD FILE NAME: g1a51010.std

DRAWING DATE: MAY, 2006

IDAHO TRANSPORTATION DEPARTMENT

BOISE IDAHO

ASSISTANT CHIEF ENGINEER (DEVELOPMENT)

CHIEF ENGINEER

STANDARD DRAWING

THRIE BEAM GUARDRAIL

REQUIRES SHEET 2 OF 2

English

STANDARD DRAWING NO.

G-1-A-5

SHEET 1 OF 2

PROFESSIONAL ENGINEER REGISTERED 6506 10/26/2010 STATE OF IDAHO TED E. MASON

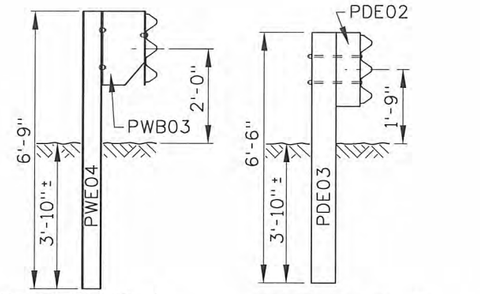

NCHRP 350, TL-4: 6'-9" LONG, W6x8.5 OR W6x9 STEEL POST WITH MODIFIED THRIE BEAM TAPERED BLOCKOUT

NCHRP 350, TL-3: 6'-6" LONG WOOD POST WITH THRIE BEAM WOOD BLOCKOUT

NCHRP 350 DETAILS

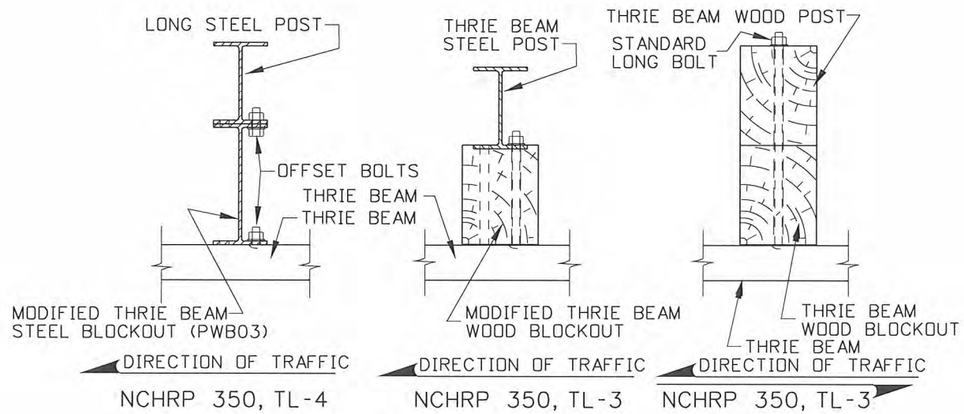

NCHRP 350, TL-4 NCHRP 350, TL-3 NCHRP 350, TL-3

THRIE BEAM BOLTING DETAILS

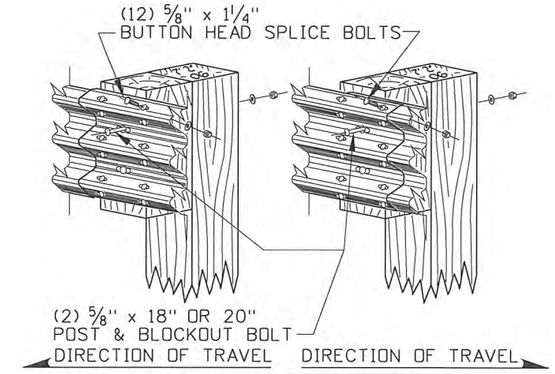

THRIE BEAM LAPPING DETAILS

(STANDARD WOOD POST INSTALLATION SHOWN)

SLOPE REQUIREMENTS (MINIMUM)
* a BALLAST SLOPE SAME AS FORESLOPE BUT NOT STEEPER THAN 2:1.
* b SEE NOTE NO. 11
USE OF CURB
* c SEE NOTE NO. 8

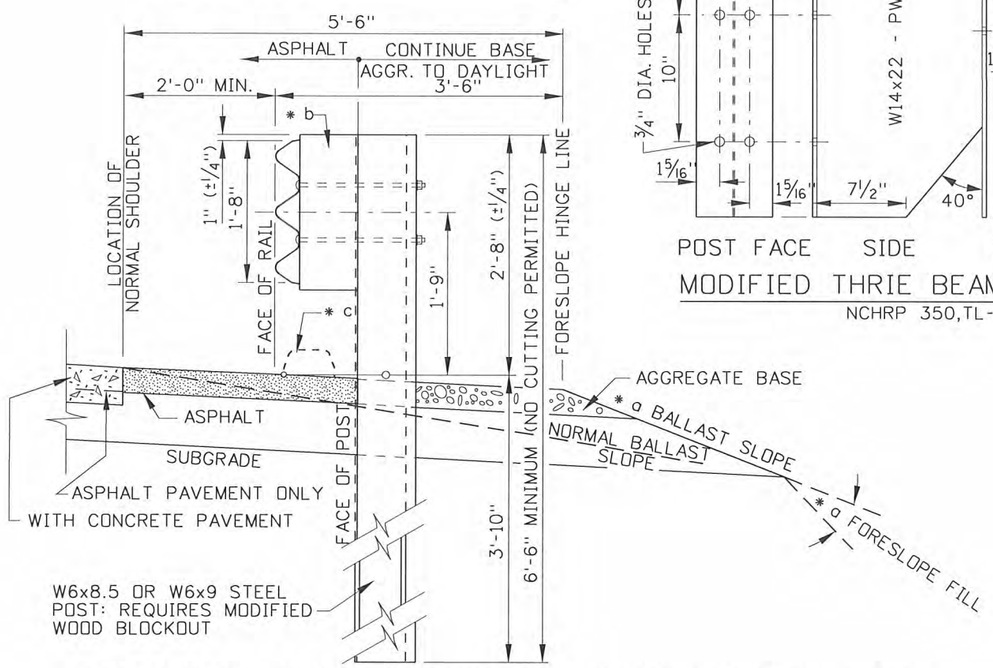

THRIE BEAM SLOPE TREATMENT - TYPE A INSTALLATION

(NCHRP 350,TL-3 SHOWN)

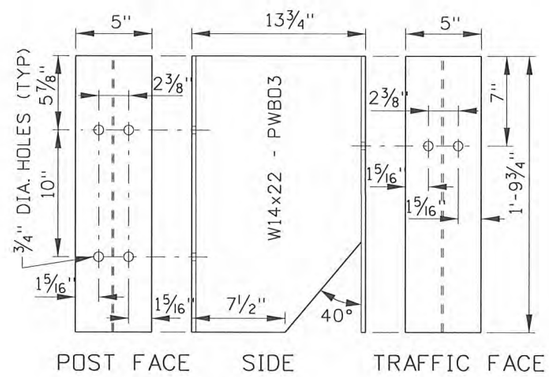

MODIFIED THRIE BEAM BLOCKOUT

NCHRP 350,TL-4

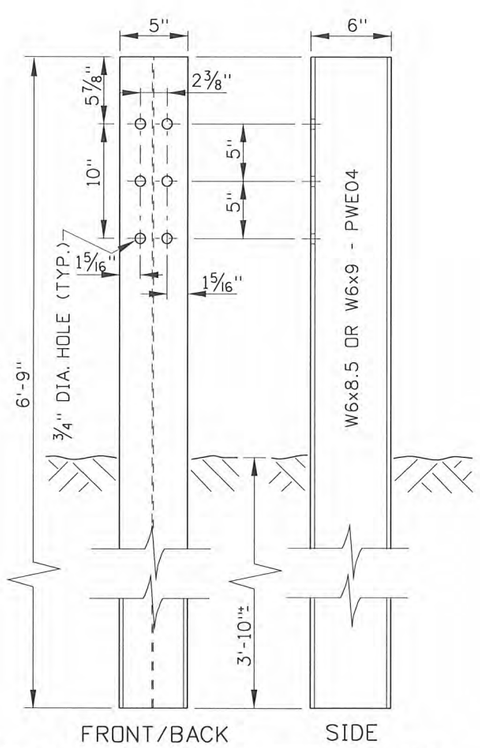

THRIE BEAM LONG STEEL POST

NCHRP 350,TL-4

NOTES

1. ALL GUARDRAIL AND ACCESSORIES SHALL CONFORM TO THE "A GUIDE TO STANDARDIZED HIGHWAY BARRIER HARDWARE".
2. THRIE BEAM RAIL AND TERMINAL SECTIONS SHALL BE GALVANIZED IN ACCORDANCE WITH AASHTO M180, CLASS A, TYPE 2 WITH THE EXCEPTION THAT ALL RAIL AND TERMINAL SECTIONS SHALL BE GALVANIZED AFTER FABRICATION WITH FABRICATION TO INCLUDE FORMING, CUTTING, SHEARING, PUNCHING, DRILLING, BENDING, WELDING, AND RIVETING.
3. NO TERMINAL HARDWARE OR TERMINAL ACCESSORY SHALL BE FIELD OR OTHERWISE MODIFIED. SLIGHT FIELD FITTING MODIFICATIONS ARE ALLOWED ON STANDARD GUARDRAIL INSTALLATIONS. ANY DRILLING, CUTTING (NOT BY HEAT), OR PUNCHING TO STANDARD GUARDRAIL ITEMS SHALL BE PAINTED WITH TWO COATS OF FORMULA 14-82 ZINC SILICATE PAINT.
4. TIMBER POSTS AND BLOCKS SHALL BE TREATED. REFER TO SECTION 710 - TIMBER AND PRESERVATIVES, OF THE "ITD STANDARD SPECIFICATIONS FOR HIGHWAY CONSTRUCTION".
5. ALL GUARDRAIL SHALL BE LAPPED IN THE DIRECTION OF THE NEAREST TRAFFIC LANE TO PREVENT SNAGGING.
6. THE THRIE BEAM ASYMMETRICAL TRANSITION ELEMENT (SEE NOTE NO. 5) SHALL BE FABRICATED FROM A RAW SECTION OF THIRE BEAM GUARDRAIL AND THE TAPERED TOP SHALL BE CUT WITH A METAL SAW (NOT WITH HEAT).
7. USE OF OTHER MANUFACTURER'S VERSIONS OF THE ASYMMETRICAL AND SYMMETRICAL THRIE BEAM TRANSITION SECTIONS AS SHOWN ARE ALLOWED; HOWEVER, THE OTHER VERSIONS SHALL HAVE THE SAME SLOT AND HOLE CONFIGURATION AND BE CONSTRUCTED OF A MINIMUM 10 GAGE GALVANIZED STEEL.
8. WHEN CURB IS CALLED FOR THE CURB FACE SHALL BE LOCATED ALONG THE FACE OF RAIL (SEE THE "TYPICAL CURB WITH GUARDRAIL INSTALLATION" DETAIL). REFER TO STANDARD DWG. H-1 FOR CURB DETAILS
9. WHEN STEEL GUARDRAIL POSTS ARE INSTALLED, THE DATE (MONTH & YEAR) AND POST LENGTH SHALL BE STAMPED IN A CONSPICUOUS PLACE NEAR THE TOP AND BETWEEN THE WEBS OF THE POST. THE CHARACTERS SHALL BE 1/4" TO 3/8" IN HEIGHT.
10. THRIE BEAM STEEL GUARDRAIL POSTS SHALL CONFORM TO THE "SPECIFICATIONS" OF THE WIDE-FLANGE GUARDRAIL POST (PWE01-04) IN THE "A GUIDE TO STANDARDIZED HIGHWAY BARRIER HARDWARE".
11. THRIE BEAM GUARDRAIL POSTS MAY BE WOOD OR STEEL. STEEL POSTS AND WOOD POSTS MAY HAVE ONLY WOOD BLOCKOUTS TO COMPLY WITH NCHRP 350, TL-3 REQUIREMENTS. NCHRP 350, TL-4 REQUIRES A 6'-9" STEEL POST AND THE MODIFIED THRIE BEAM (STEEL) BLOCKOUT.
12. NOT TO SCALE.

REVISIONS								
NO.	DATE	BY	NO.	DATE	BY	NO.	DATE	BY
1	5-07	MSM						
2	10-10	PLR						

SCALES SHOWN ARE FOR 11" X 17" PRINTS ONLY

CADD FILE NAME: g1a51010.std

DRAWING DATE: MAY, 2006

IDAHO TRANSPORTATION DEPARTMENT

BOISE IDAHO

ASSISTANT CHIEF ENGINEER (DEVELOPMENT)

CHIEF ENGINEER

STANDARD DRAWING

THRIE BEAM GUARDRAIL

REQUIRES SHEET 2 OF 2

English

STANDARD DRAWING NO.

G-1-A-5

SHEET 2 OF 2

PROFESSIONAL ENGINEER REGISTERED 6506 10/26/2010 STATE OF IDAHO TED E. MASON

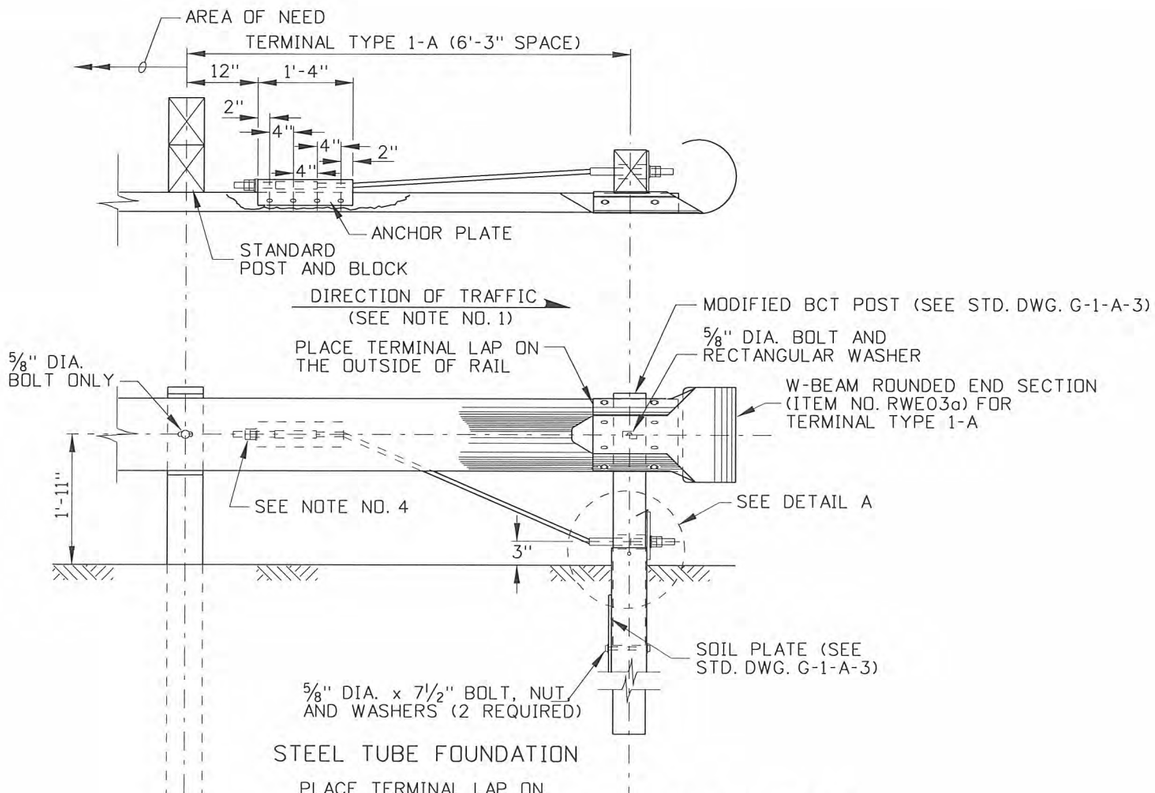

STEEL TUBE FOUNDATION

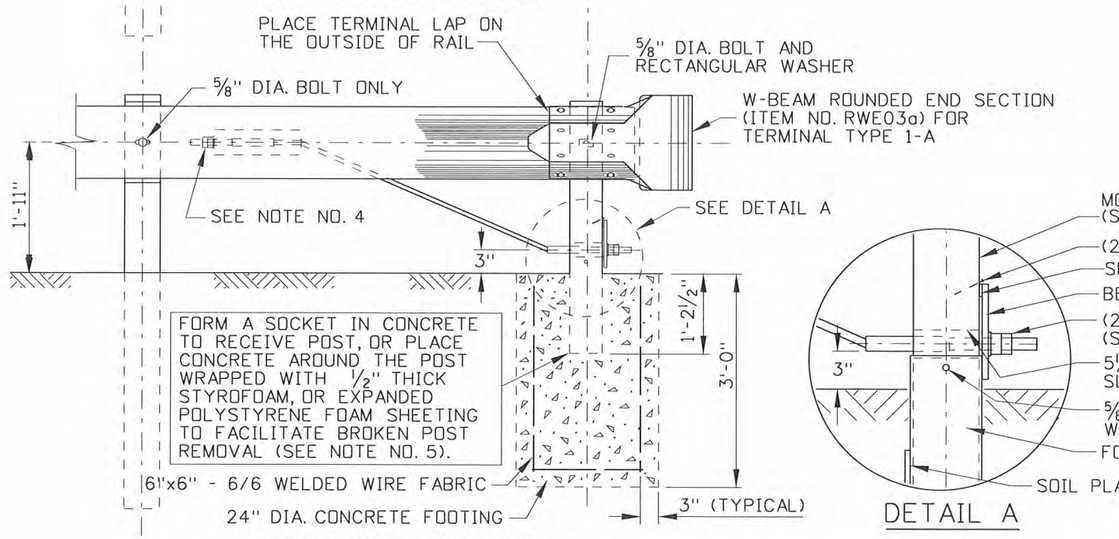

CONCRETE FOUNDATION
TERMINAL TYPE 1-A
WARNING! - SEE NOTE NO. 1

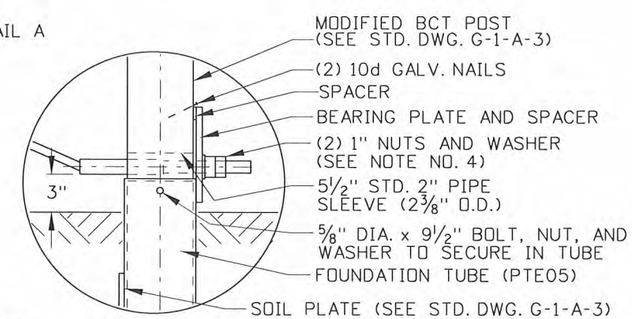

DETAIL A

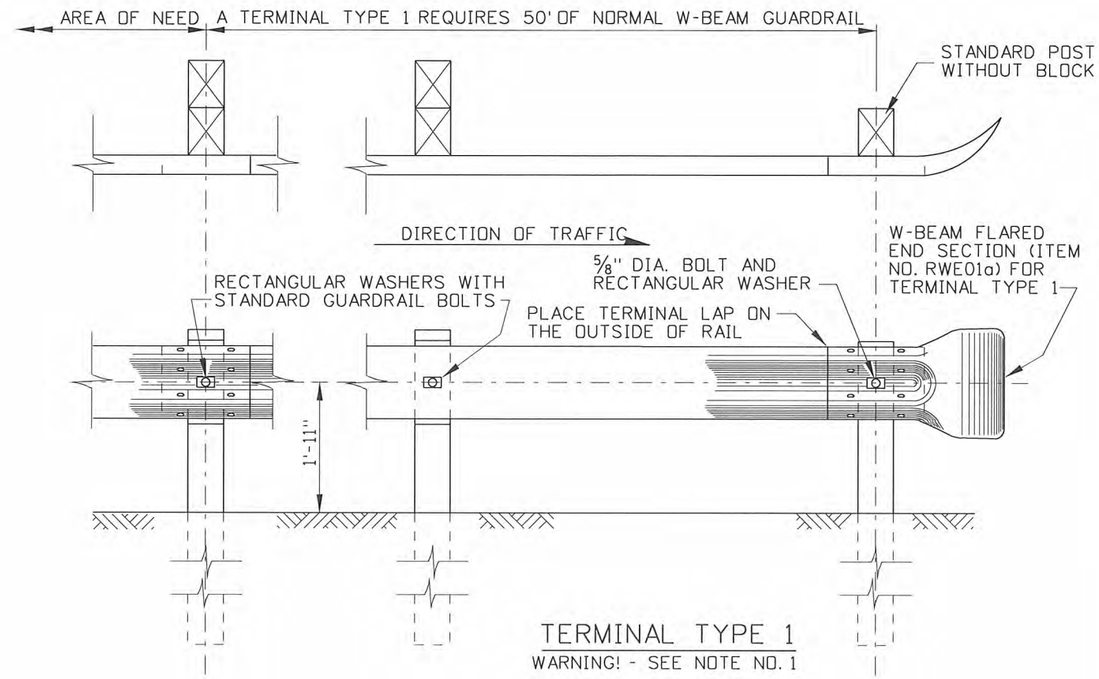

TERMINAL TYPE 1
WARNING! - SEE NOTE NO. 1

NOTES

1. THE TYPE 1 AND TYPE 1-A TERMINALS DO NOT MEET ANY NCHRP 350 REQUIREMENTS. THESE TERMINALS MAY ONLY BE USED WHERE NOT EXPOSED TO APPROACHING TRAFFIC.

2. THIS DRAWING REQUIRES STANDARD DRAWINGS G-1-A-1 THROUGH G-1-A-4 FOR W-BEAM GUARDRAIL INSTALLATION REQUIREMENTS AND HARDWARE AND ACCESSORY SPECIFICATIONS.

3. A MODIFIED BCT POST (SEE STD. DWG. G-1-A-3) IS ACCEPTABLE WHEN THE CONCRETE FOUNDATION IS USED.

4. THE OUTSIDE NUT ON EACH END OF THE ANCHOR CABLE SHALL BE TORQUED TO A MINIMUM OF 100 FT. - LBS. AGAINST THE INSIDE NUT.

5. FILL THE VOID BETWEEN THE INSIDE OF THE FOUNDATION TUBE AND POST WITH EXPANDED RIGID POLYSTYRENE PLASTIC FOAM.

6. NOT TO SCALE.

REVISIONS

NO.	DATE	BY	NO.	DATE	BY	NO.	DATE	BY
1	1-00	MSM						
2	7-03	MSM						
3	12-04	MSM						
4	5-06	MSM						
5	9-10	MGL						

SCALES SHOWN ARE FOR 11" X 17" PRINTS ONLY

CADD FILE NAME: g1b_1010.std

DRAWING DATE: JUNE, 1996

IDAHO TRANSPORTATION DEPARTMENT

BOISE IDAHO

ASSISTANT CHIEF ENGINEER (DEVELOPMENT)

CHIEF ENGINEER

STANDARD DRAWING

GUARDRAIL TERMINALS TYPE 1 & 1-A

REQUIRES STD. DWGS. G-1-A-1 THRU G-1-A-4

English

STANDARD DRAWING NO.

G-1-B

SHEET 1 OF 1

PROFESSIONAL ENGINEER REGISTERED 6506 10/26/2010 STATE OF IDAHO TED E. MASON

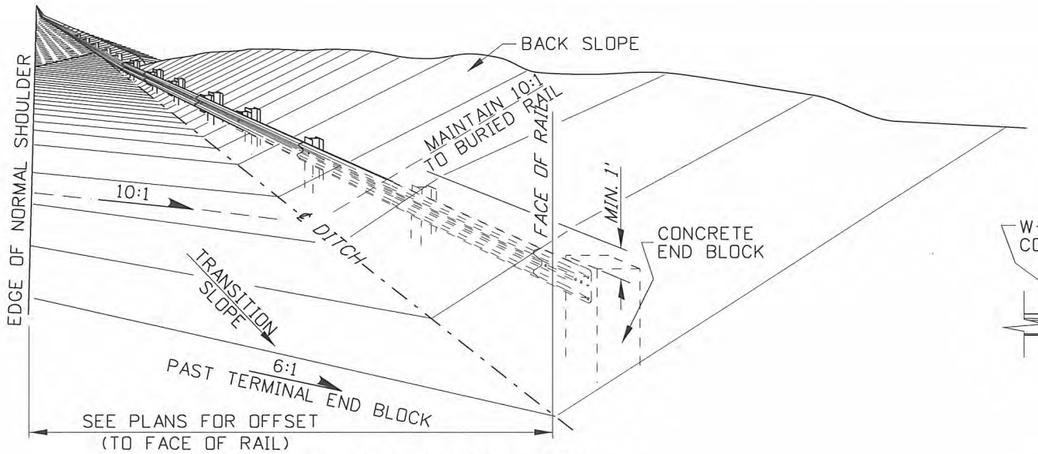

PERSPECTIVE VIEW

(SEE NOTE NO. 7)

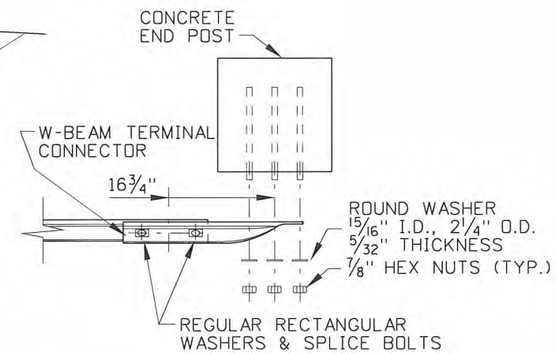

POST CONNECTION DETAIL

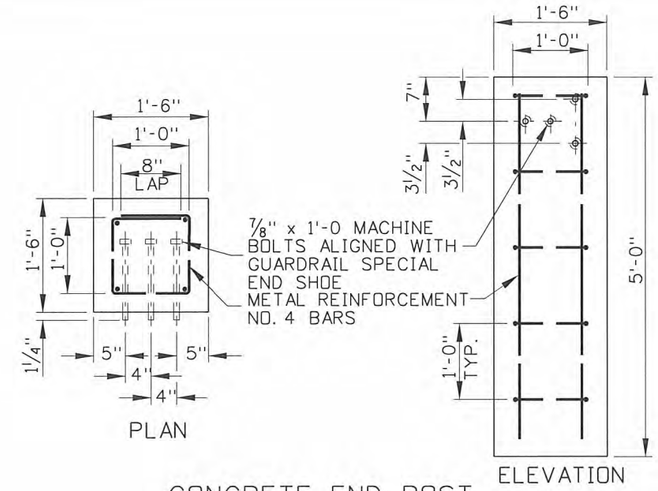

CONCRETE END POST

TABLE OF MAXIMUM TAPERS		
DESIGN SPEED (mph)	TAPERS a:b	TAPERS a':b'
75	16:1	8:1
70	15:1	8:1
65	14:1	8:1
60	13:1	8:1
55	12:1	8:1
50	11:1	8:1
45	10:1	8:1
40	9:1	8:1
≤35	8:1	7:1

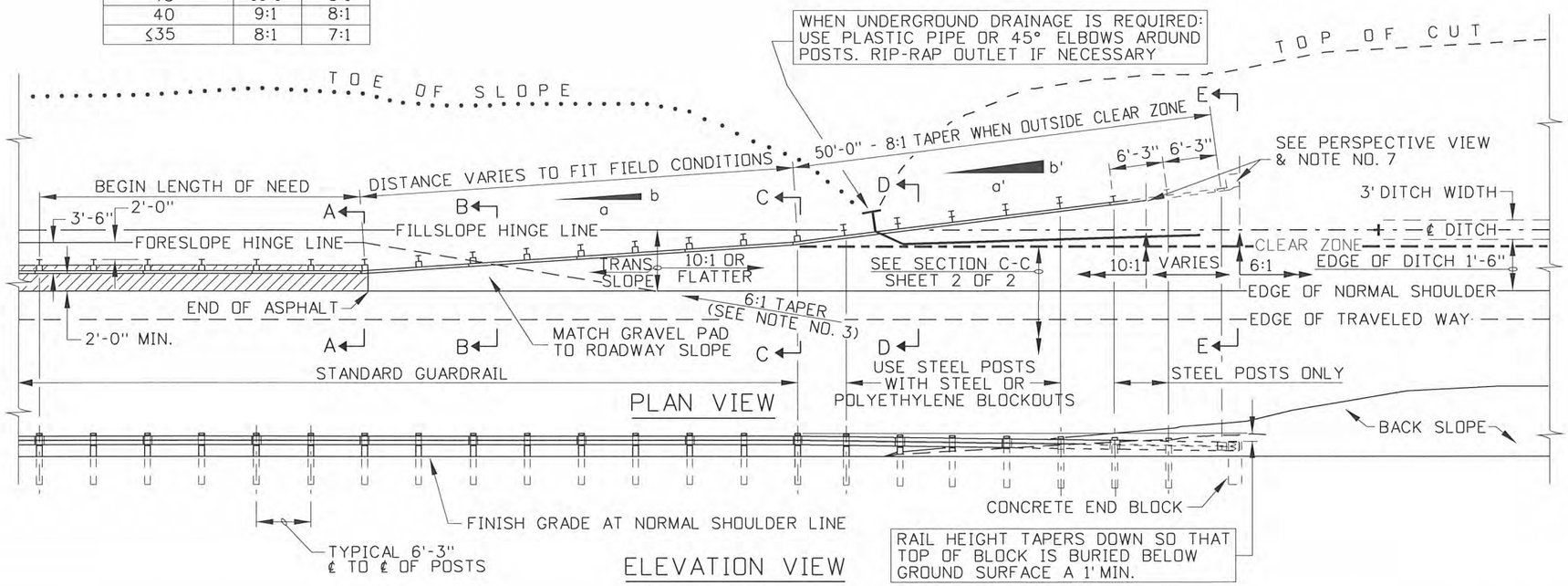

NOTES

1. REFER TO STANDARD DRAWINGS G-1-A-1 THROUGH G-1-A-4 FOR INSTALLATION DETAILS, DETAILS OF GUARDRAIL, GUARDRAIL POSTS, POST BLOCKS, POST SPACING, AND GUARDRAIL BOLTING HARDWARE.

2. CARRY THE GUARDRAIL AT THE INITIAL TAPER (a:b) WHILE MAINTAINING THE CENTER OF THE RAIL, ALONG THE FACE OF RAIL, AT A HEIGHT OF 1'-11" FROM THE 10:1 ROADWAY FORESLOPE SURFACE. ONCE THE CLEAR ZONE IS TRAVERSED BEGIN THE SECONDARY TAPER (a':b') AND BEGIN TO LOWER THE RAIL SO THAT THE CONCRETE BLOCK WILL HAVE A MINIMUM SOIL COVER OF 1'.

3. THE SURFACE BETWEEN THE FORESLOPE HINGE LINE AND THE FILL SLOPE HINGE LINE SHALL TRANSITION FROM THE TRAILING ROADWAY FORESLOPE TO A 10:1 OR FLATTER SLOPE.

4. A SIDE DRAIN MUST BE INSTALLED WHERE THE DITCH CANNOT BE GRADED TO DRAIN OR HAS INADEQUATE CAPACITY. TO ACCOMMODATE A SIDE DRAIN PIPE THROUGH THE GUARDRAIL POSTS USE A BURIED FLEXIBLE PLASTIC PIPE OR 45° ELBOWS OF METAL OR CONCRETE PIPE.

5. THE CONCRETE END BLOCKS MAY BE PRECAST OR CAST-IN-PLACE.

6. THE PAYMENT FOR METAL TERMINAL SECTION TYPE 2 SHALL BE LIMITED TO THE CONCRETE END POST, METAL W-BEAM RUBRAIL, TERMINAL CONNECTOR, POST CONNECTION HARDWARE, AND ANY EXCAVATION AND/OR BACKFILL REQUIRED.

7. TRANSITION THE FORESLOPE FROM 10:1 TO 6:1 BETWEEN THE BURIED RAIL PORTION AND THE CONCRETE END BLOCK. WHEN THE DESTINATION FORESLOPE IS LESS THAN 6:1 CONTINUE THE TRANSITION FORESLOPE PAST THE CONCRETE END BLOCK.

8. THE PAYMENT FOR METAL TERMINAL SECTION TYPE 2-A SHALL BE LIMITED TO THE CONCRETE END BLOCK, METAL W-BEAM RUBRAIL, TERMINAL END CONNECTOR, POST CONNECTION HARDWARE, AND ANY EXCAVATION AND/OR BACKFILL REQUIRED.

9. NOT TO SCALE.

REVISIONS								
NO.	DATE	BY	NO.	DATE	BY	NO.	DATE	BY
1	2-96	MSM	5	10-04	MSM			
2	8-00	MSM	6	4-06	MSM			
3	6-01	MSM	7	6-07	MSM			
4	7-03	MSM	8	10-10	PLR			
5	10-03	MSM						

SCALES SHOWN ARE FOR 11" X 17" PRINTS ONLY

CADD FILE NAME: glc11210.std

DRAWING DATE: FEBRUARY, 1996

IDAHO TRANSPORTATION DEPARTMENT

BOISE IDAHO

ASSISTANT CHIEF ENGINEER (DEVELOPMENT)

CHIEF ENGINEER

STANDARD DRAWING

GUARDRAIL TERMINAL TYPE 2-A, WITH 10:1 OR FLATTER FORESLOPE

REQUIRES SHEET 2 OF 2 & STD. DWGS. G-1-A-1 THRU G-1-A-4

English

STANDARD DRAWING NO.

G-1-C-1

SHEET 1 OF 2

PROFESSIONAL ENGINEER REGISTERED 6506 STATE OF IDAHO 12/6/2010 TED E. MASON

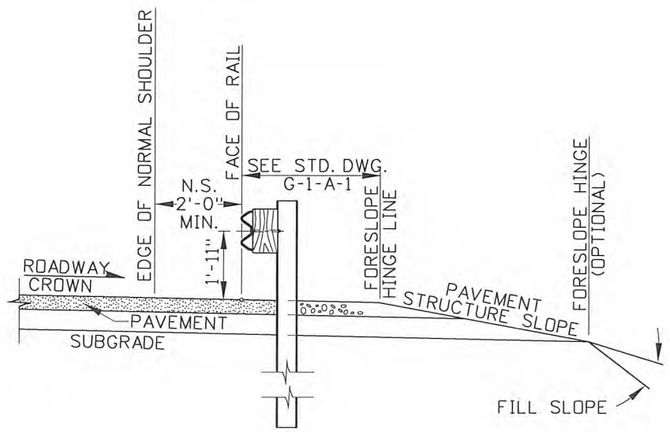

BEGINNING OF INITIAL TAPER

SECTION A-A

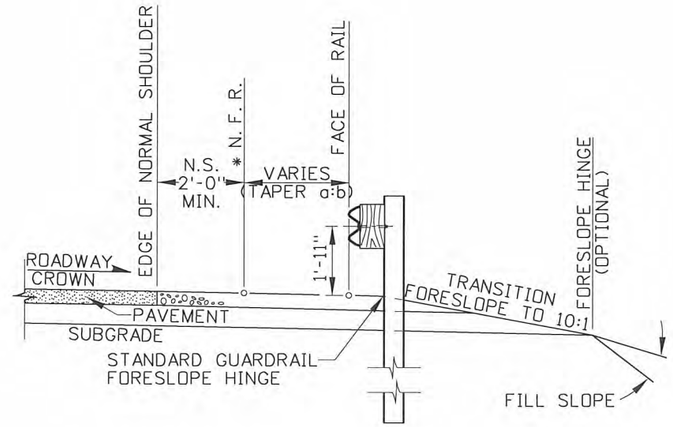

GUARDRAIL ENTERS TRANSITION FORESLOPE

SECTION B-B

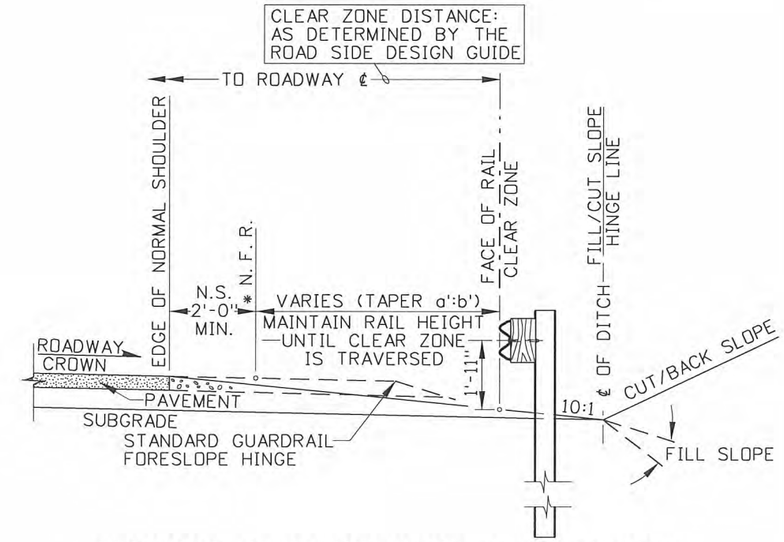

BEGINNING OF SECOND TAPER AT CLEAR ZONE

SECTION C-C

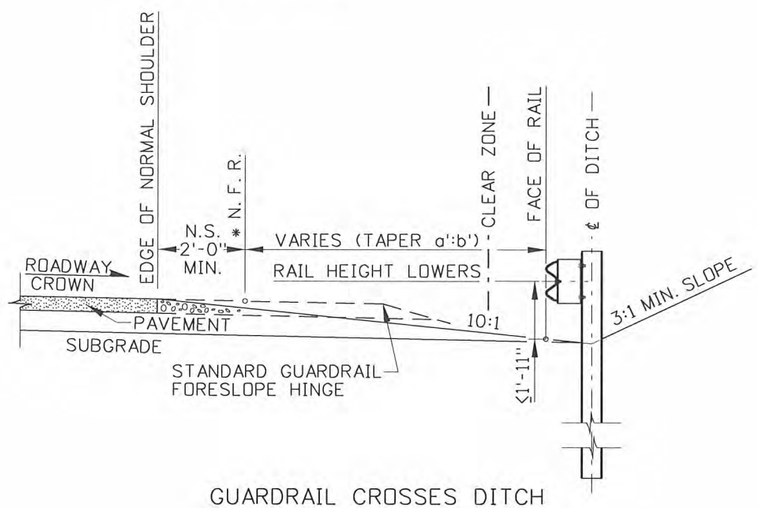

GUARDRAIL CROSSES DITCH

SECTION D-D

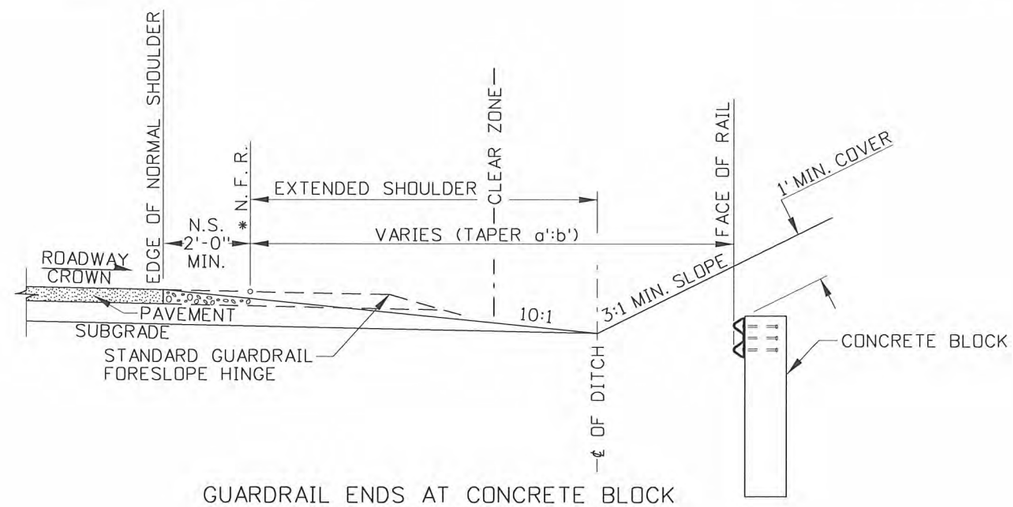

GUARDRAIL ENDS AT CONCRETE BLOCK

SECTION E-E

SUBNOTES
* a NORMAL FACE OF RAIL (N. F. R.)
* b NORMAL SHOULDER (N. S.)

REVISIONS								
NO.	DATE	BY	NO.	DATE	BY	NO.	DATE	BY
1	2-96	MSM	5	10-04	MSM			
2	8-00	MSM	6	4-06	MSM			
3	6-01	MSM	7	6-07	MSM			
4	7-03	MSM	8	1-10	MGL			
5	10-03	MSM	9	10-10	PLR			

SCALES SHOWN ARE FOR 11" X 17" PRINTS ONLY

CADD FILE NAME: glc110l0.std

DRAWING DATE: FEBRUARY, 1996

IDAHO TRANSPORTATION DEPARTMENT

BOISE IDAHO

ASSISTANT CHIEF ENGINEER (DEVELOPMENT)

CHIEF ENGINEER

STANDARD DRAWING

GUARDRAIL TERMINAL TYPE 2-A, WITH 10:1 OR FLATTER FORESLOPE

REQUIRES SHEET 1 OF 2 & STD. DWGS. G-1-A-1 THRU G-1-A-4

English

STANDARD DRAWING NO.

G-1-C-1

SHEET 2 OF 2

PROFESSIONAL ENGINEER REGISTERED 6506 STATE OF IDAHO TED E. MASON

10/26/2010

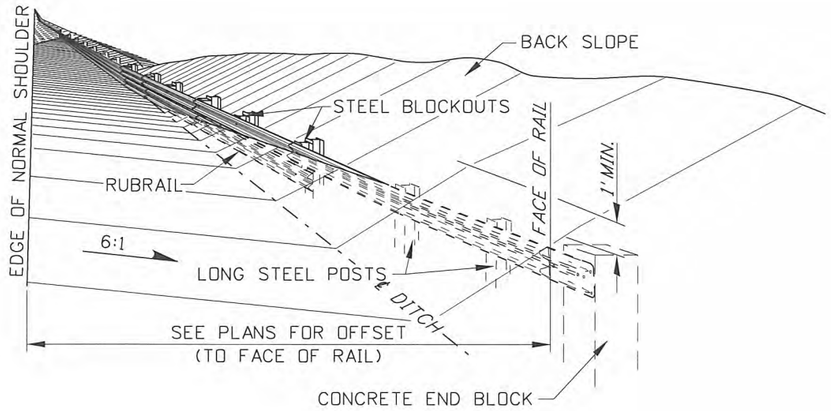

PERSPECTIVE VIEW

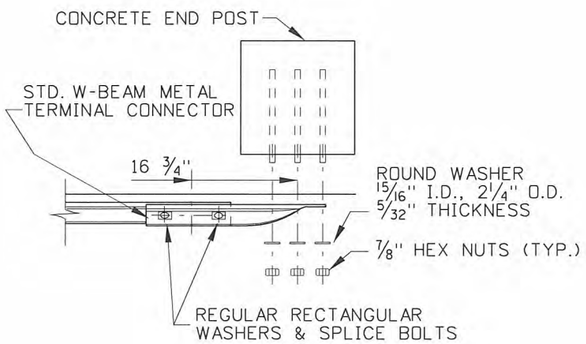

POST CONNECTION DETAIL

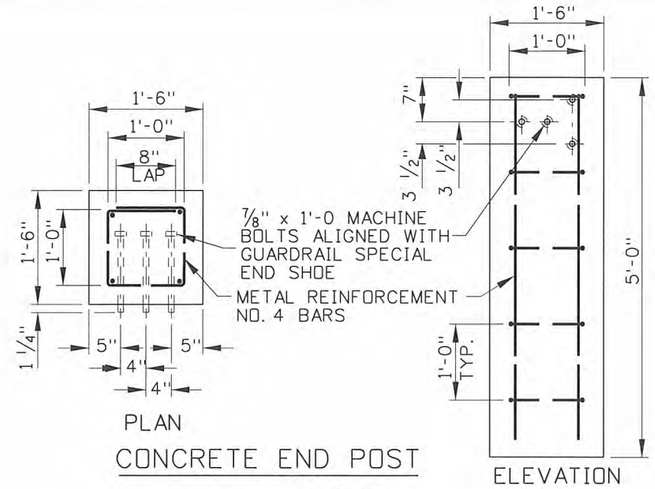

CONCRETE END POST

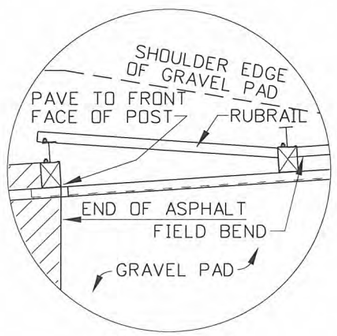

DETAIL A

TABLE OF MAXIMUM TAPERS	
DESIGN SPEED (mph)	TAPER a:b
75	16:1
70	15:1
65	14:1
60	13:1
55	12:1
50	11:1
45	10:1
40	9:1
≤35	8:1

WHEN UNDERGROUND DRAINAGE IS REQUIRED: USE PLASTIC PIPE OR 45° ELBOWS AROUND POSTS. RIP-RAP OUTLET IF NECESSARY

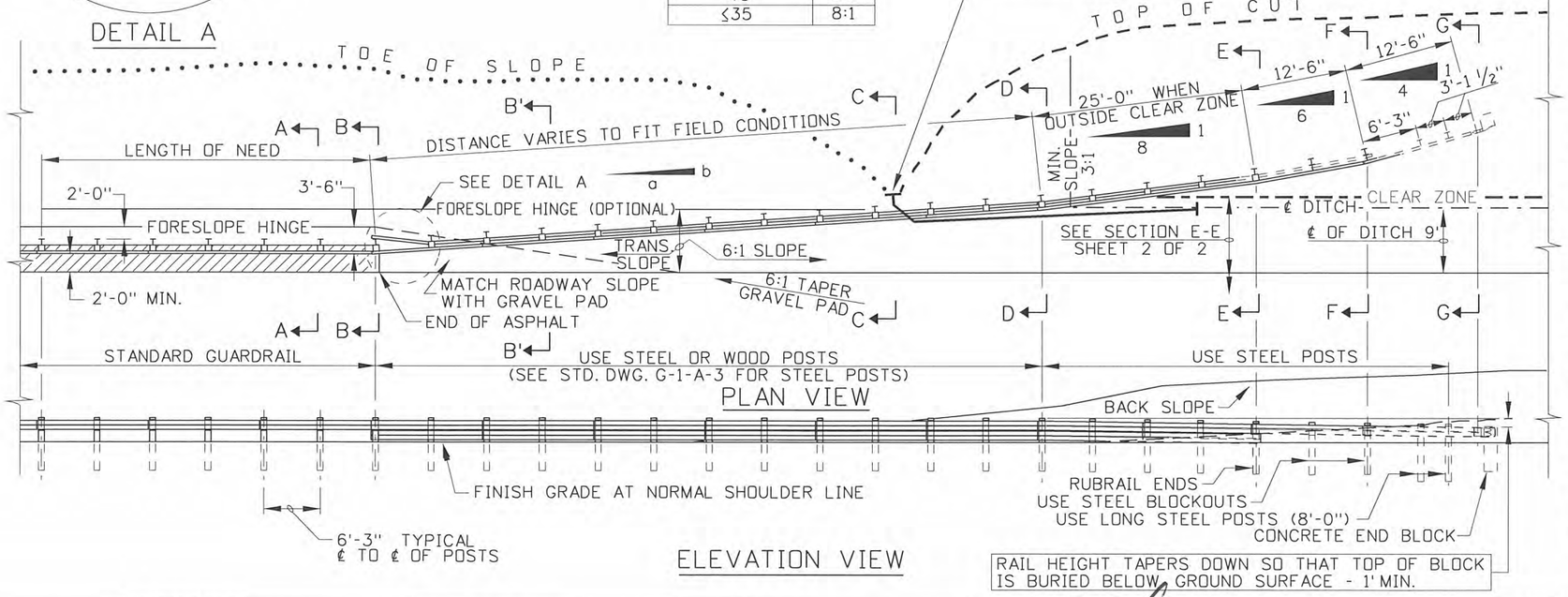

NOTES

1. REFER TO STANDARD DRAWINGS G-1-A-1 THROUGH G-1-A-4 FOR INSTALLATION DETAILS, DETAILS OF GUARDRAIL ACCESSORIES & HARDWARE.

2. CARRY THE GUARDRAIL AT THE INITIAL TAPER (a:b) UNTIL THE DITCH IS TRAVERSED, THEN COMMENCE WITH THE SECONDARY TAPERS (8:1, 6:1, & 4:1) FOR 37'-6".

3. MAINTAIN THE CENTER OF THE TOP RAIL, ALONG THE FACE OF RAIL, AT A HEIGHT OF 1'-11" FROM A POINT 2'-0" OUTSIDE OF THE NORMAL SHOULDER (THE SAME HEIGHT AS THE TRAILING "STANDARD GUARDRAIL") THROUGH THE INITIAL TAPER (SEE NOTE NO. 5). AT THE COMMENCEMENT OF THE SECONDARY TAPER (8:1) BEGIN TO LOWER THE RAIL SO THAT THE CONCRETE BLOCK WILL HAVE A MINIMUM SOIL COVER OF 1'.

4. THE HEIGHT OF THE RUBRAIL, AT THE RUBRAIL CENTER, ALONG THE FACE OF THE RUBRAIL, SHALL NOT EXCEED 2'-0" (+/-) 1/2" FROM THE ROADWAY FORESLOPE (SEE SECTION D-D) AT ANY POINT ALONG THE TERMINAL.

5. WHILE MAINTAINING THE HEIGHT OF THE GUARDRAIL AT 1'-11", DO NOT EXCEED THE 2'-0" (+/-) 1/2" HEIGHT OF THE RUBRAIL ABOVE THE ROADWAY FORESLOPE. NOT EXCEEDING THE MAXIMUM HEIGHT OF THE RUBRAIL SHALL TAKE PRECEDENCE OVER THE GUARDRAIL HEIGHT OF 1'-11": THEREFORE, THE GUARDRAIL SHALL BE LOWERED BELOW THE 1'-11" TO NOT EXCEED THE MAXIMUM 2'-0" (+/-) 1/2"RUBRAIL HEIGHT.

6. THE SLOPE OF THE SURFACE BETWEEN THE ROADWAY SHOULDER LINE AND THE HINGE SHALL BE TRANSITIONED FROM THE ADJACENT ROADWAY SLOPE TO A 6:1 OR FLATTER SLOPE.

7. A SIDE DRAIN MUST BE INSTALLED WHERE A DITCH CANNOT BE GRADED TO DRAIN THROUGH THE TERMINAL OR HAS INADEQUATE CAPACITY. TO ACCOMMODATE A SIDE DRAIN PIPE THROUGH THE GUARDRAIL POSTS USE A BURIED FLEXIBLE PLASTIC PIPE OR 45° ELBOWS OF METAL OR CONCRETE PIPE.

8. THE CONCRETE END BLOCK MAY BE PRECAST OR CAST-IN-PLACE.

9. THE PAYMENT FOR METAL TERMINAL SECTION TYPE 2-B SHALL BE LIMITED TO THE CONCRETE END BLOCK, METAL W-BEAM RUBRAIL, TERMINAL END CONNECTOR, POST CONNECTION HARDWARE, AND ANY EXCAVATION AND/OR BACKFILL REQUIRED.

10. NOT TO SCALE.

PROFESSIONAL ENGINEER REGISTERED 6506 12/6/2000 STATE OF IDAHO TED E. MASON

REVISIONS								
NO.	DATE	BY	NO.	DATE	BY	NO.	DATE	BY
1	11-00	MSM	6	9-10	MGL			
2	6-01	MSM						
3	11-03	MSM						
4	9-04	MSM						
5	4-06	MSM						

SCALES SHOWN ARE FOR 11" X 17" PRINTS ONLY

CADD FILE NAME: glc21210.std

DRAWING DATE: FEBRUARY, 1996

IDAHO TRANSPORTATION DEPARTMENT

BOISE IDAHO

ASSISTANT CHIEF ENGINEER (DEVELOPMENT)

CHIEF ENGINEER

STANDARD DRAWING

GUARDRAIL TERMINAL TYPE 2-B, FOR LESS THAN 10:1 TO 6:1 FORESLOPE

REQUIRES SHEET 2 OF 2 & STD. DWGS. G-1-A-1 THRU G-1-A-4

English

STANDARD DRAWING NO.

G-1-C-2

SHEET 1 OF 2

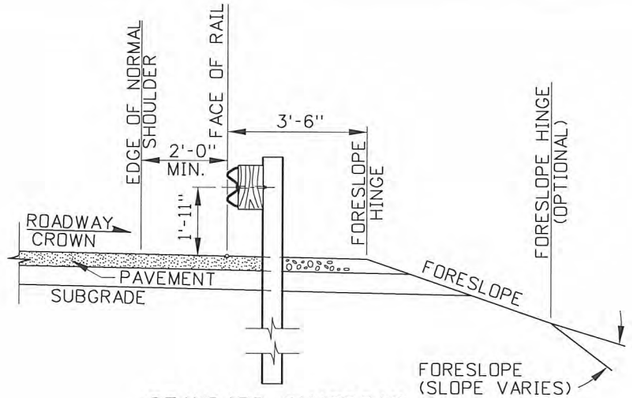

STANDARD GUARDRAIL

SECTION A-A

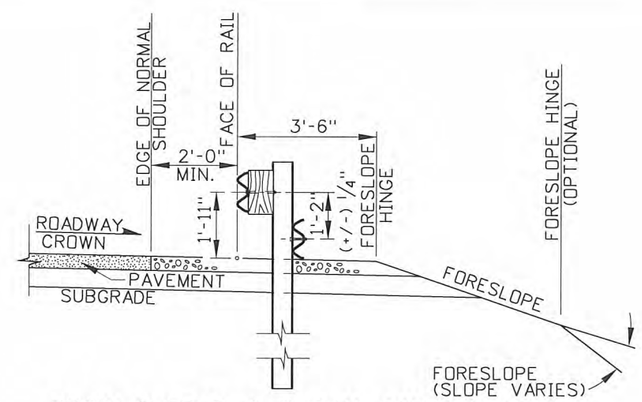

BEGIN RUBRAIL & INITIAL TAPER (a:b)

SECTION B-B

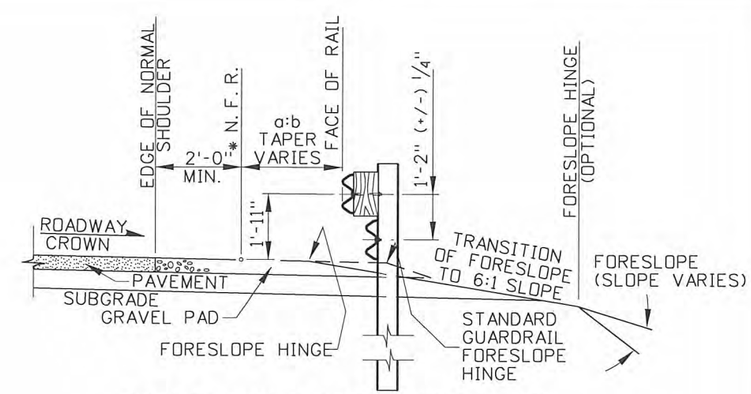

GRAVEL PAD & TRANSITION SLOPE

SECTION B'-B'

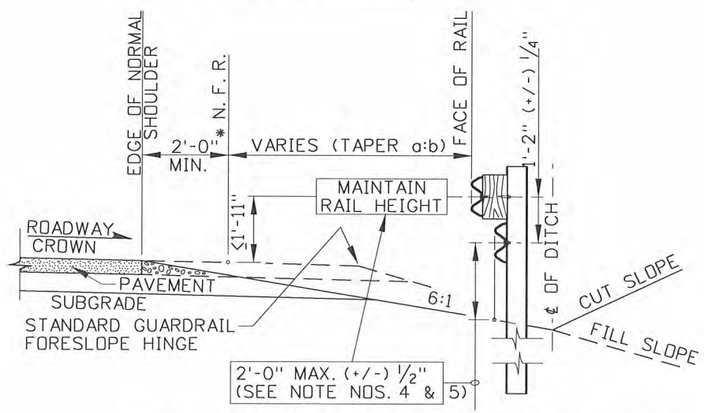

END OF FILL SLOPE/BEGINNING OF CUT SLOPE

SECTION C-C

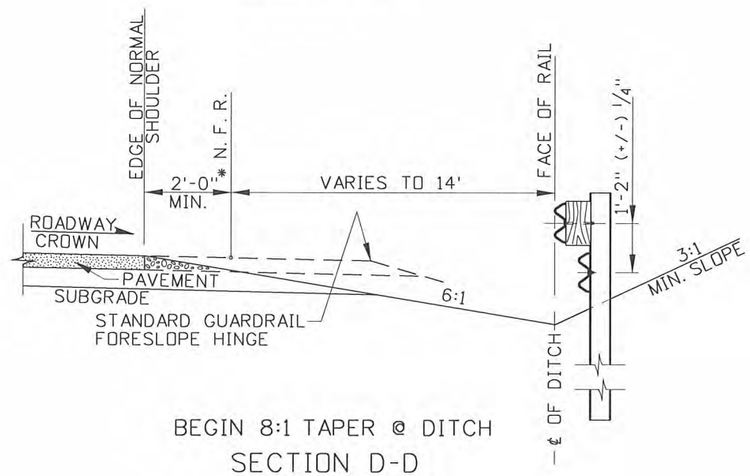

BEGIN 8:1 TAPER @ DITCH

SECTION D-D

(SEE NOTE NO. 2)

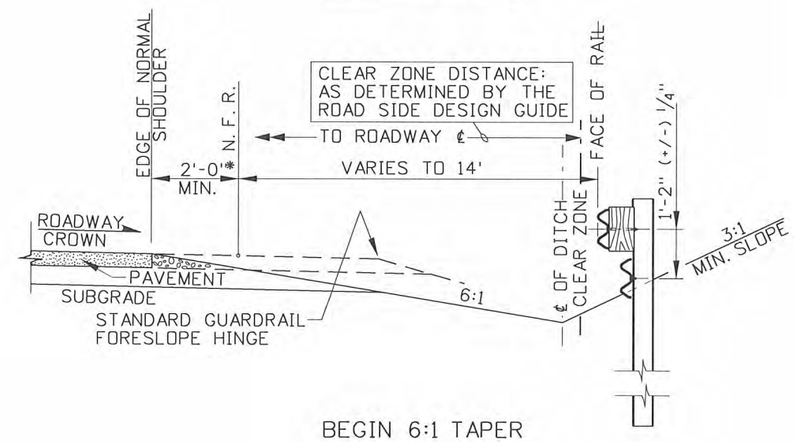

BEGIN 6:1 TAPER

SECTION E-E

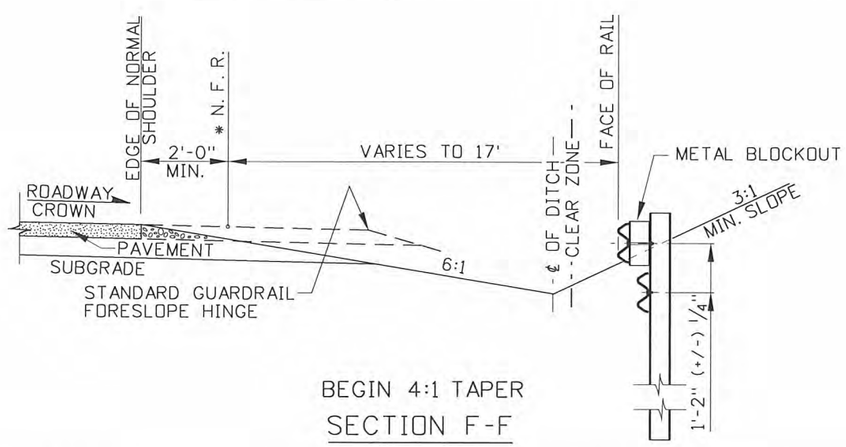

BEGIN 4:1 TAPER

SECTION F-F

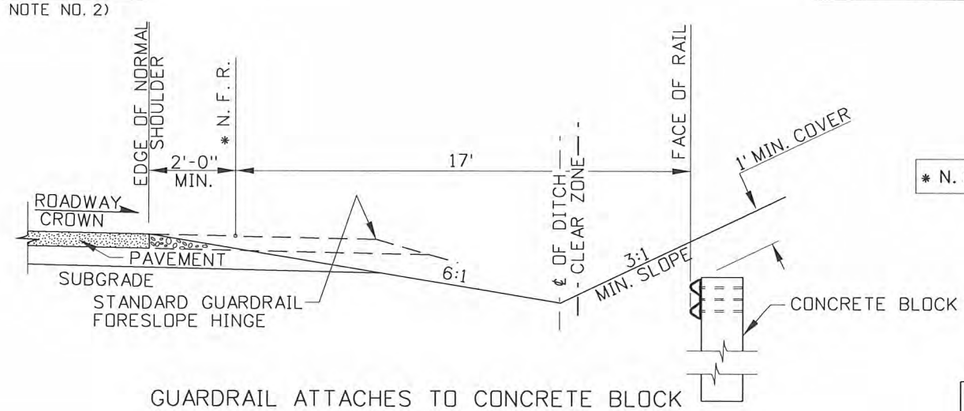

GUARDRAIL ATTACHES TO CONCRETE BLOCK

SECTION G-G

* N. F. R. (NORMAL FACE OF RAIL)

REVISIONS								
NO.	DATE	BY	NO.	DATE	BY	NO.	DATE	BY
1	11-00	MSM	6	9-10	MGL			
2	6-01	MSM						
3	11-03	MSM						
4	9-04	MSM						
5	4-06	MSM						

SCALES SHOWN ARE FOR 11" X 17" PRINTS ONLY

CADD FILE NAME: glc21010.std

DRAWING DATE: FEBRUARY, 1996

IDAHO TRANSPORTATION DEPARTMENT

BOISE IDAHO

ASSISTANT CHIEF ENGINEER (DEVELOPMENT)

CHIEF ENGINEER

STANDARD DRAWING

GUARDRAIL TERMINAL TYPE 2-B, FOR LESS THAN 10:1 TO 6:1 FORESLOPE

REQUIRES SHEET 1 OF 2 & STD. DWGS. G-1-A-1 THRU G-1-A-4

English

STANDARD DRAWING NO.

G-1-C-2

SHEET 2 OF 2

PROFESSIONAL ENGINEER REGISTERED 6506 10/26/2012 STATE OF IDAHO TED E. MASON

SPECIFICATION NOTES

1. ALL STEEL SHALL CONFORM TO ASTM A 36.
2. FLAT PLATE PANELS ARE 3/16" THICK.
3. STIFFENERS ARE 1/4" PLATE STEEL.
4. ALL HOLE DIAMETERS ARE 1".
5. WELD COMPONENTS WITH E60 WELDING ROD.
6. GALVANIZE.

WELDING INSTRUCTIONS

(I) STIFFENERS LOCATED ON THE OUTSIDE EDGES OF THE COVER PLATES SHALL BE WELDED AS FOLLOWS: 3/16" CONTINUOUS BACK WELD ON EXTERNAL SIDES AND 3/16" FILET WELD BY 1" LONG SPACE AT 2" ON INTERNAL SIDES.

(II) STIFFENERS LOCATED ON THE INSIDE OF THE COVER PLATES SHALL BE WELDED AS FOLLOWS: 3/16" FILLET WELD BY 1" LONG SPACED AT 2".

(III) RECTANGULAR AND TRIANGULAR COVER PLATES SHALL BE WELDED TOGETHER WITH A 3/16" CONTINUOUS BACK WELD ON BOTH SIDES.

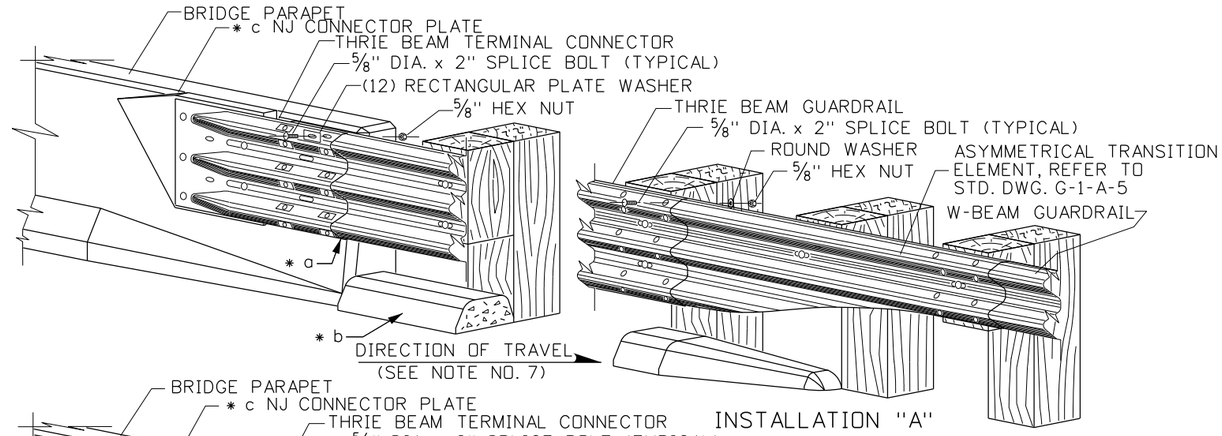

INSTALLATION "A"

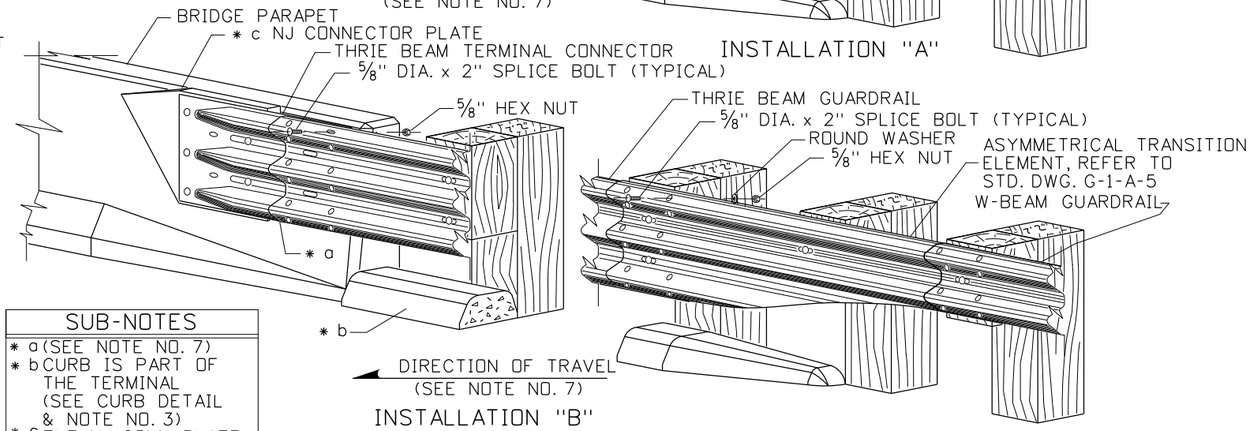

INSTALLATION "B"

THRIE BEAM TO W-BEAM INSTALLATION

(WOOD POST INSTALLATION SHOWN)

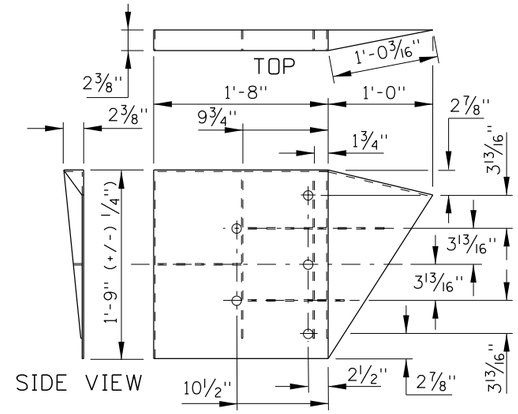

NEW JERSEY CONNECTOR PLATE

(TO BE PLACED ON INSIDE PARAPET FACE ONLY)

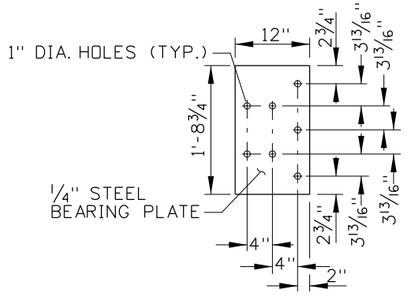

THRIE BEAM CONNECTOR PLATE

ITEM NO. FPB07

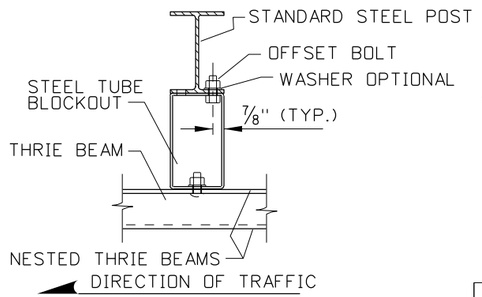

TYPE 3 STL. TUBE BOLTING DETAIL

(SEE NOTE NOS. 10 & 11)

SUB-NOTES

* a (SEE NOTE NO. 7)
* b CURB IS PART OF THE TERMINAL (SEE CURB DETAIL & NOTE NO. 3)
* c THE NJ CONN. PLATE IS FOR SLANTED PARAPET FACES ONLY

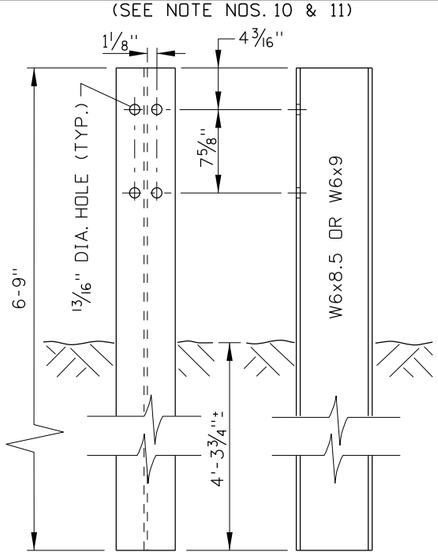

THRIE BEAM TUBE BLOCKOUT

STEEL POST

NCHRP 350, TL-3

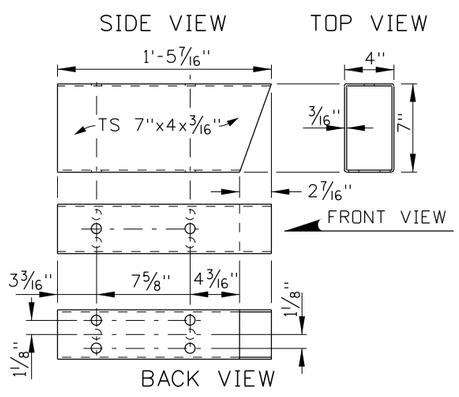

TYPE 3 STEEL TUBE BLOCKOUT

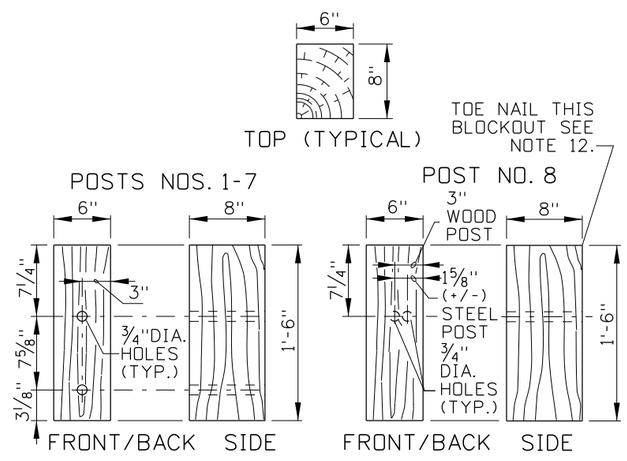

TYPE 3 WOOD BLOCKOUT DETAILS

NOTES

1. THIS DRAWING REQUIRES STANDARD DRAWINGS G-1-A-1 THROUGH G-1-A-5 AND IS SUBJECT TO THE W-BEAM GUARDRAIL AND THRIE BEAM INSTALLATION REQUIREMENTS AND HARDWARE/ACCESSORY SPECIFICATIONS.
2. ALL THRIE BEAM BARRIER RAIL AND ACCESSORIES SHALL CONFORM TO THE SPECIFICATIONS CONTAINED WITHIN THE "A GUIDE TO STANDARDIZED HIGHWAY BARRIER HARDWARE".
3. TYPE 3 TERMINALS REQUIRE THE INSTALLATION OF CURB SECTION 10 AT THE BASE AND ALONG THE FACE OF POSTS NO. 1 THRU 7 (SEE STD. DWG. H-1 FOR CURB DETAILS).
4. ALL FIELD DRILLED WOODEN W-BEAM AND THRIE BEAM ACCESSORIES SHALL BE PAINTED WITH AN APPROVED PRESERVATIVE.
5. NO PUNCHING, DRILLING, CUTTING, OR WELDING WILL BE PERMITTED ON ANY METAL W-BEAM, THRIE BEAM OR GALVANIZED ACCESSORY.
6. THE TYPE 3 TERMINAL SHALL BE USED WITH PARAPETS DETAILED ON STANDARD DRAWINGS G-2-C, G-2-D, AND BRIDGE DRAWING TYPE IV STANDARD CONCRETE PARAPET WITH THRIE BEAM GUARDRAIL. REFER TO STANDARD DRAWINGS G-2-C AND G-2-D FOR CONCRETE TRANSITION BARRIER OR CONCRETE TRANSITION PARAPET BARRIER.
7. WHEN ATTACHING THRIE BEAM AND W-BEAM RAIL TO THE SYMMETRICAL TRANSITION ELEMENT LAP THE RAIL IN THE DIRECTION OF THE NEAREST TRAFFIC LANE TO PREVENT SNAGGING.
8. FIELD WARPING THE THRIE BEAM END TO THE SLOPED FACE OF THE CONCRETE PARAPET IS NOT ALLOWED. THE NEW JERSEY CONNECTOR PLATE WITH THRIE BEAM CONNECTOR PLATE SHALL BE USED.
9. ALL THRIE BEAM GUARDRAIL POSTS NOS. 1-7 SHALL BE EITHER WOOD WITH WOOD BLOCKOUTS OR STEEL WITH STEEL TUBE BLOCKOUTS, POST NO. 8 SHALL BE WOOD OR STEEL WITH MODIFIED WOOD BLOCKOUT.

ORIGINAL STORED AT: ITD, Headquarters 3311 West State Boise, Idaho

ORIGINAL SIGNED BY: RYAN SCOT CARNIE
DATE ORIGINAL SIGNED: AUGUST 26, 2011

REVISIONS

NO.	DATE	BY	NO.	DATE	BY	NO.	DATE	BY
6	5-02	MSM	11	4-06	MSM	16	8-11	RSC
7	9-03	MSM	12	11-06	MSM			
8	11-03	MSM	13	5-07	MSM			
9	6-04	MSM	14	11-08	JRV			
10	11-04	MSM	15	9-10	PLR			

SCALES SHOWN ARE FOR 11" X 17" PRINTS ONLY

CADD FILE NAME: gle_0811.std

DRAWING DATE: JUNE, 1988

IDAHO TRANSPORTATION DEPARTMENT

BOISE IDAHO

ORIGINAL SIGN BY: LOREN THOMAS
HIGHWAYS PROGRAM OVERSIGHT ENGINEER

ORIGINAL SIGN BY: TOM COLE
CHIEF ENGINEER

STANDARD DRAWING

GUARDRAIL TERMINAL TYPE 3

REQUIRES SHEET 2 OF 2 & STD. DWGS. G-1-A-1 THRU G-1-A-5 & H-1-A

English

STANDARD DRAWING NO.

G-1-E

SHEET 1 OF 2

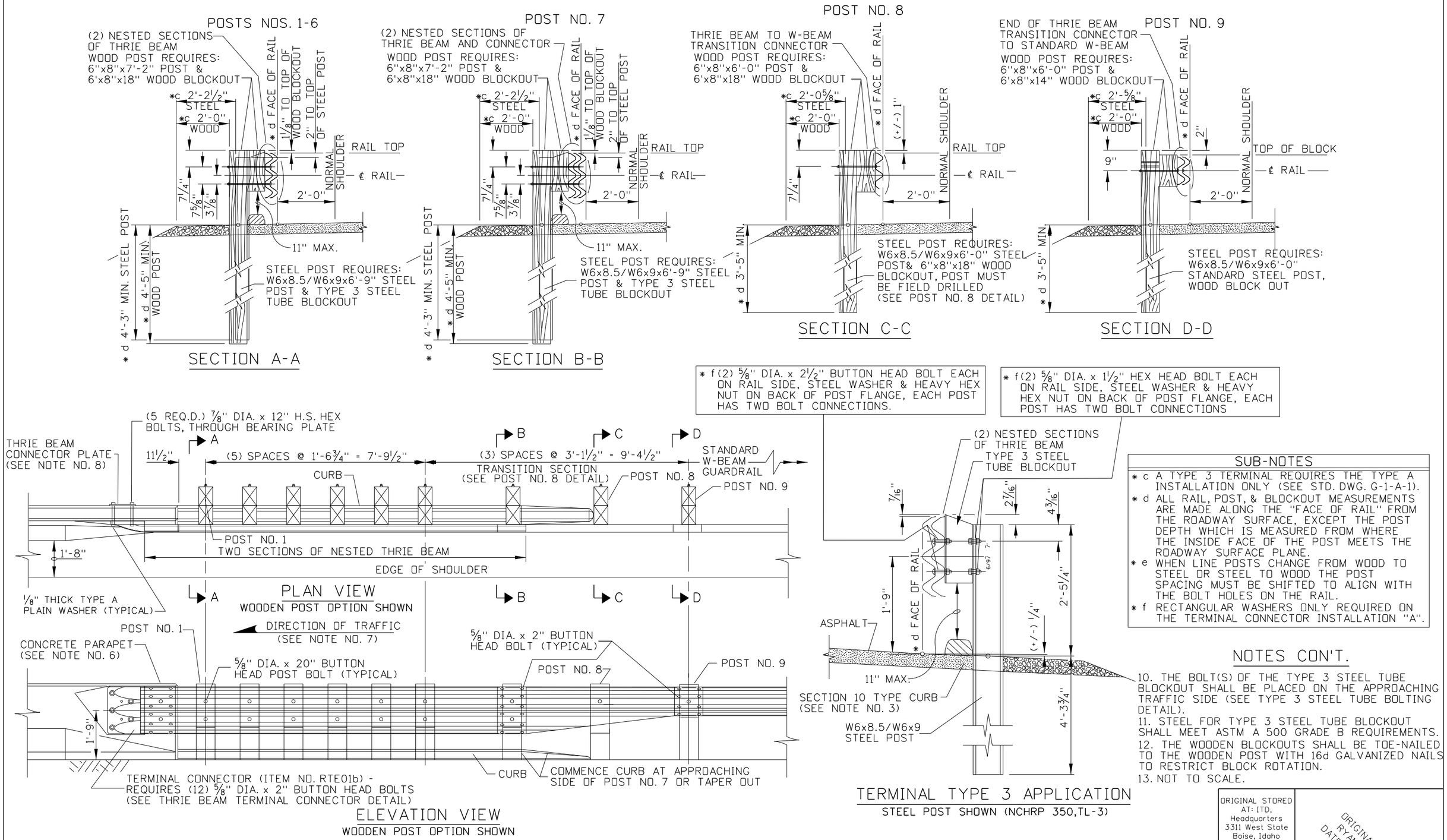

SUB-NOTES

* c A TYPE 3 TERMINAL REQUIRES THE TYPE A INSTALLATION ONLY (SEE STD. DWG. G-1-A-1).
* d ALL RAIL, POST, & BLOCKOUT MEASUREMENTS ARE MADE ALONG THE "FACE OF RAIL" FROM THE ROADWAY SURFACE, EXCEPT THE POST DEPTH WHICH IS MEASURED FROM WHERE THE INSIDE FACE OF THE POST MEETS THE ROADWAY SURFACE PLANE.
* e WHEN LINE POSTS CHANGE FROM WOOD TO STEEL OR STEEL TO WOOD THE POST SPACING MUST BE SHIFTED TO ALIGN WITH THE BOLT HOLES ON THE RAIL.
* f RECTANGULAR WASHERS ONLY REQUIRED ON THE TERMINAL CONNECTOR INSTALLATION "A".

NOTES CON'T.

10. THE BOLT(S) OF THE TYPE 3 STEEL TUBE BLOCKOUT SHALL BE PLACED ON THE APPROACHING TRAFFIC SIDE (SEE TYPE 3 STEEL TUBE BOLTING DETAIL).
11. STEEL FOR TYPE 3 STEEL TUBE BLOCKOUT SHALL MEET ASTM A 500 GRADE B REQUIREMENTS.
12. THE WOODEN BLOCKOUTS SHALL BE TOE-NAILED TO THE WOODEN POST WITH 16d GALVANIZED NAILS TO RESTRICT BLOCK ROTATION.
13. NOT TO SCALE.

ORIGINAL STORED AT: ITD, Headquarters 3311 West State Boise, Idaho

ORIGINAL SIGNED BY: RYAN SCOT CARNIE DATE ORIGINAL SIGNED: AUGUST 26, 2011

REVISIONS								
NO.	DATE	BY	NO.	DATE	BY	NO.	DATE	BY
6	5-02	MSM	11	4-06	MSM	16	8-11	RSC
7	9-03	MSM	12	11-06	MSM			
8	11-03	MSM	13	5-07	MSM			
9	6-04	MSM	14	11-08	JRV			
10	11-04	MSM	15	9-10	PLR			

SCALES SHOWN ARE FOR 11" X 17" PRINTS ONLY

CADD FILE NAME: gle_0811.std

DRAWING DATE: JUNE, 1988

IDAHO TRANSPORTATION DEPARTMENT

BOISE IDAHO

ORIGINAL SIGN BY: LOREN THOMAS
HIGHWAYS PROGRAM OVERSIGHT ENGINEER

ORIGINAL SIGN BY: TOM COLE
CHIEF ENGINEER

STANDARD DRAWING

GUARDRAIL TERMINAL TYPE 3

REQUIRES SHEET 1 OF 2 & STD. DWGS. G-1-A-1 THRU G-1-A-5 & H-1-A

English

STANDARD DRAWING NO.

G-1-E

SHEET 2 OF 2

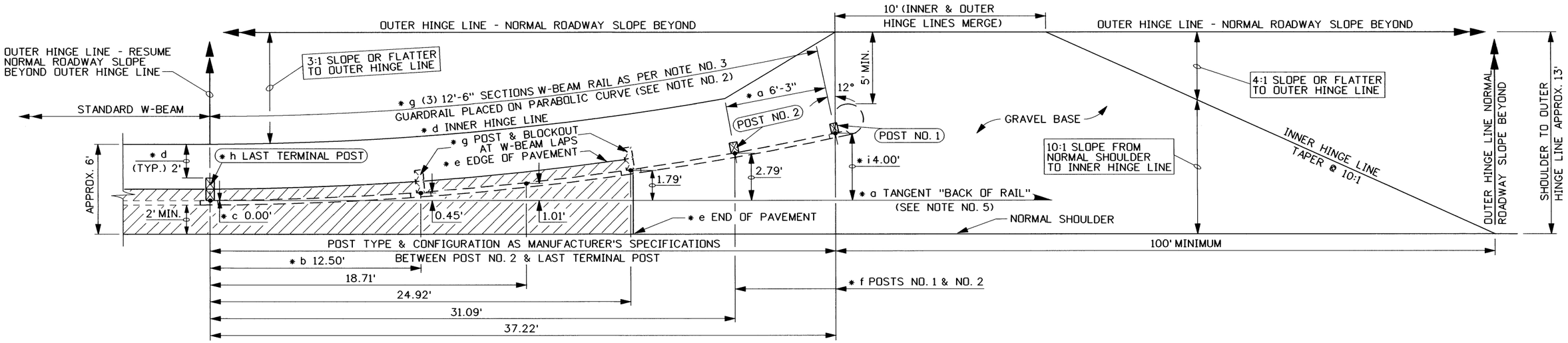

PLAN VIEW

SUB-NOTES

* a ALL POST SPACING MEASUREMENTS ARE MADE ALONG THE (BACK OF RAIL).
* b TANGENT DISTANCE IS MEASURED BEGINNING AT THE LAST TERMINAL POST'S HORIZONTAL CENTERLINE TO A POINT ALONG THE TANGENT (BACK OF RAIL) WHICH CORRESPONDS TO THE RAILS POINT OF OFFSET MEASUREMENT.
* c OFFSET DISTANCE IS MEASURED FROM THE POINT ALONG THE TANGENT (BACK OF RAIL). TO A POINT ON THE BACK OF THE CURVED TERMINAL RAIL (SEE SUB-NOTE "* b").
* d THE INNER HINGE LINE IS 2' BEHIND THE BACK OF THE GUARDRAIL TERMINAL POSTS (NOTE: POST NO. 2 HAS NO BLOCKOUT USE 2'-7 ½").
* e PAVE ALONG THE FACE OF THE POSTS TO THE APPROACHING EDGE OF THE SUBSEQUENT POST (POST NO. 3) BEYOND POST NO. 2, THEN RETURN TO THE NORMAL SHOULDER.
* f POSTS NO. 1 & NO. 2 ARE WOODEN BREAKAWAY WITH STEEL FOUNDATION TUBES W/O BLOCKOUTS OR AS MANUFACTURER'S INSTRUCTIONS.
* g POST & BLOCKOUT REQUIRED AT GUARDRAIL LAPS.
* h THE LAST TERMINAL POST - BEGIN STANDARD GUARDRAIL INSTALLATION (SEE STD. DWGS. G-1-A-1 THROUGH G-1-A-4).
* i USE OF THE 3.00' OFFSET IS NOT ALLOWED. WITH A TYPE 5 TERMINAL. IN A LIMITED SPACE SITUATION USE A TYPE 10 TERMINAL (SEE STD. DWG. G-1-M).

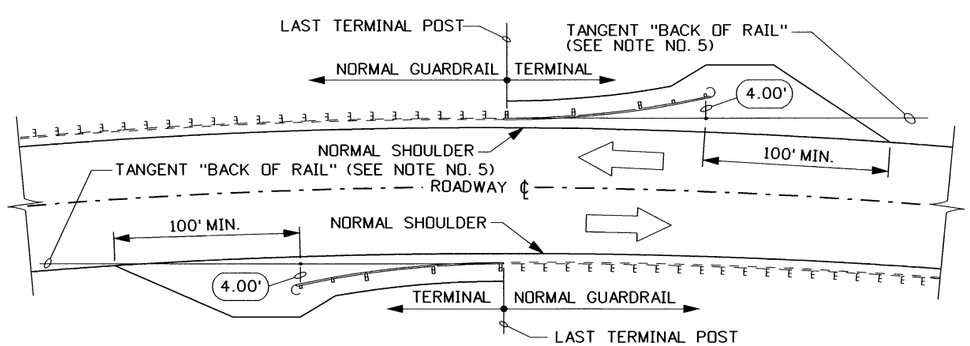

CURVED ROADWAY TERMINAL PLACEMENT

NOTES

1. TERMINAL TYPE 5 ALTERNATES "A" AND "B" ARE INTERCHANGEABLE AND ARE TO BE INSTALLED AT THE INSTALLERS DISCRETION. SEE STANDARD DRAWING G-1-F-2 FOR TERMINAL TYPE 5 ALTERNATE "B".
2. THE TERMINAL TYPE 5 ALTERNATE "A" MUST FOLLOW THE PARABOLIC CURVE SHOWN AND THE TOTAL LAYOUT MUST MEET OR EXCEED THE PERFORMANCE CRITERIA SET FORTH IN NATIONAL COOPERATIVE HIGHWAY RESEARCH PROGRAM REPORT 350, TL-3 "RECOMMENDED PROCEDURES FOR THE SAFETY PERFORMANCE OF HIGHWAY FEATURES".
3. THIS DRAWING REQUIRES STANDARD DRAWINGS G-1-A-1 THROUGH G-1-A-4 AND IS SUBJECT TO THE W-BEAM GUARDRAIL INSTALLATION REQUIREMENTS AND HARDWARE/ACCESSORY SPECIFICATIONS. FOR ERECTION DETAILS AND INFORMATION SPECIFIC TO THIS TERMINAL SEE THE INFORMATION PROVIDED BY THE MANUFACTURER.
4. THE OUTSIDE NUT ON EACH END OF THE ANCHOR CABLE SHALL BE TORQUED TO A MINIMUM OF 100 ft.-lbs. AGAINST THE INSIDE NUT (OUTSIDE NUTS NOT SUPPLIED WITH PROPRIETARY TERMINAL).
5. WHEN A TERMINAL TYPE 5 ALTERNATE "A" IS CONSTRUCTED ON A HORIZONTAL CURVE, PLACE THE TERMINAL OFF OF THE "TANGENT (BACK OF RAIL)". DO NOT PLACE THE TYPE 5 TERMINAL TYPE "A" ON THE INSIDE OF A GREATER THAN 8° HORIZONTAL CURVE.
6. NOT TO SCALE.

REVISIONS								
NO.	DATE	BY	NO.	DATE	BY	NO.	DATE	BY
1	5-96	MSM	5	10-04	MSM			
2	6-97	MSM	6	5-06	MSM			
3	8-98	MSM						
4	1-00	MSM						
5	1-03	MSM						

SCALES SHOWN ARE FOR 11" X 17" PRINTS ONLY

CADD FILE NAME g1f10506.std

DRWG. ORIG. DATE: APRIL, 1995

IDAHO TRANSPORTATION DEPARTMENT

BOISE IDAHO

ASSISTANT CHIEF ENGINEER (DEVELOPMENT)

CHIEF ENGINEER

STANDARD DRAWING

GUARDRAIL TERMINAL TYPE 5 ALTERNATE "A"

REQUIRES STD. DWGS. G-1-A-1 THRU G-1-A-4

English

STANDARD DRWG. NO.

G-1-F-1

SHEET 1 OF 1

PROFESSIONAL ENGINEER * LAND SURVEYOR REGISTERED 2240 5/2/06 STATE OF IDAHO MILFORD MILLER

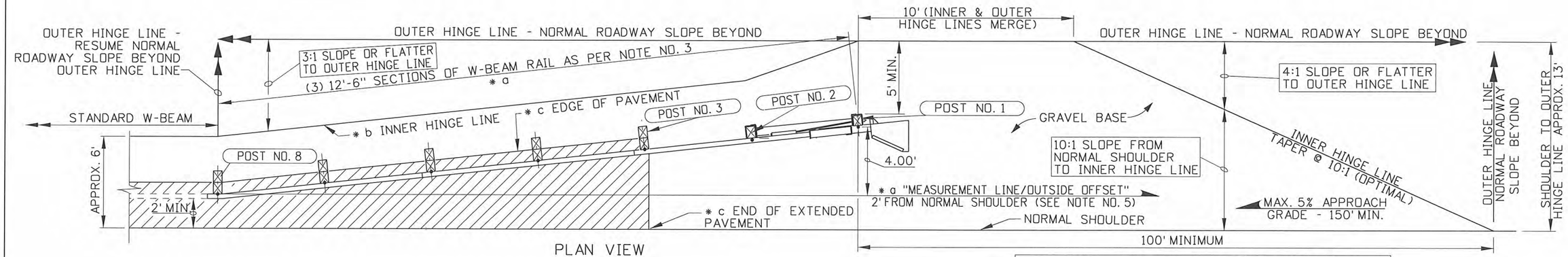

PLAN VIEW

* a INSTALLATION OF POST SPACING REFER TO MANUFACTURES SPECIFICATIONS PER APPROVED LIST.
* b THE INNER HINGE LINE IS 2' BEHIND THE BACK OF GUARDRAIL POSTS NO. 3 THROUGH NO. 8 (2'-7½" FOR POST NO. 2)
* c PAVE ALONG THE FACE OF THE POSTS TO THE EDGE OF POST NO. 3 THEN RETURN TO THE NORMAL SHOULDER.

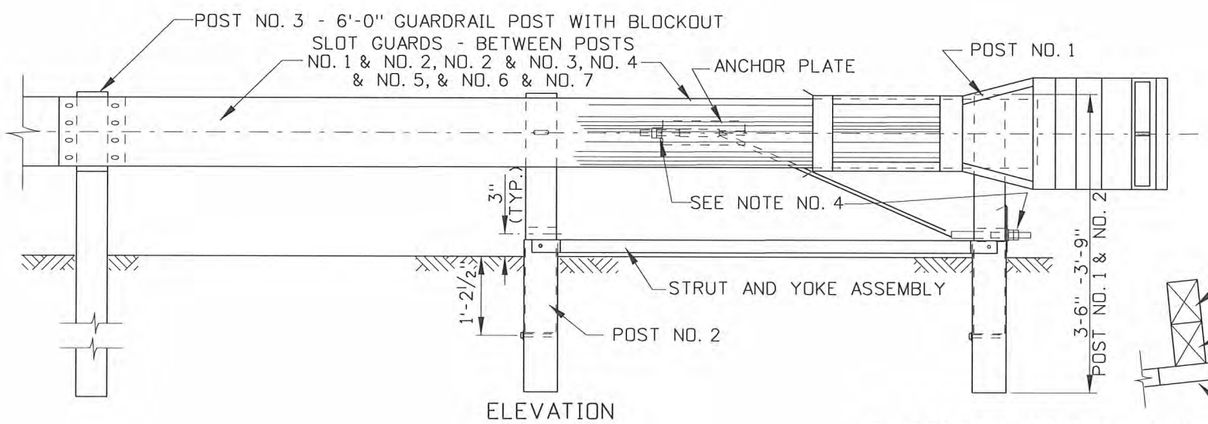

ELEVATION

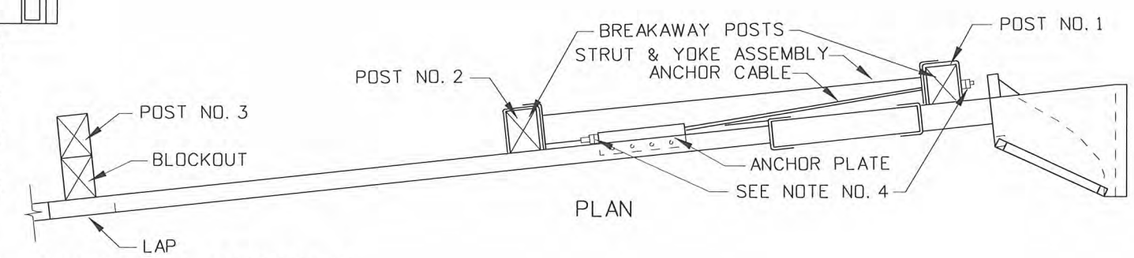

PLAN

BUFFERED END & ANCHORAGE ASSEMBLY

NOTES

1. TERMINAL TYPE 5 ALTERNATE "A" AND "B" ARE INTERCHANGEABLE AND ARE TO BE INSTALLED AT THE INSTALLERS DISCRETION. SEE STANDARD DRAWING G-1-F-1 FOR TERMINAL TYPE 5 ALTERNATE "A".

2. THE TERMINAL TYPE 5 ALTERNATE "B" FOLLOWS A STRAIGHT TAPER AS SHOWN AND THE TOTAL LAYOUT MUST MEET OR EXCEED THE PERFORMANCE CRITERIA SET FORTH IN NATIONAL COOPERATIVE RESEARCH PROGRAM REPORT 350, TL-3 "RECOMMENDED PROCEDURES FOR THE SAFETY PERFORMANCE OF HIGHWAY FEATURES".

3. FOR INSTALLATION DETAILS OF GUARDRAIL, POSTS, BLOCKOUTS, AND FITTINGS REFER TO STANDARD DRAWING G-1-A-1 THROUGH G-1-A-4. FOR ERECTION DETAILS SPECIFIC TO THIS AND OTHER TERMINALS SEE THE INFORMATION PROVIDED BY THE MANUFACTURER.

4. THE OUTSIDE NUT ON EACH END OF THE ANCHOR CABLE SHALL BE TORQUED TO A MINIMUM OF 100 ft. - lbs. AGAINST THE INSIDE NUT (OUTSIDE NUTS NOT SUPPLIED WITH PROPRIETARY TERMINAL).

5. WHEN A TERMINAL TYPE 5 ALTERNATE "B" IS CONSTRUCTED ON A HORIZONTAL CURVE, USE THE ALTERNATE METHOD DESCRIBED IN ITEM "* d" FOR ESTABLISHMENT OF THE POST PLACEMENTS. POST NO. 1 IS 4.00' OUTSIDE OF THE "OUTSIDE OFFSET", 2' OUTSIDE OF THE NORMAL SHOULDER). DO NOT PLACE THE TERMINAL TYPE 5 ALTERNATE "B" ON THE INSIDE OF A GREATER THAN 8° HORIZONTAL CURVE.

6. NOT TO SCALE.

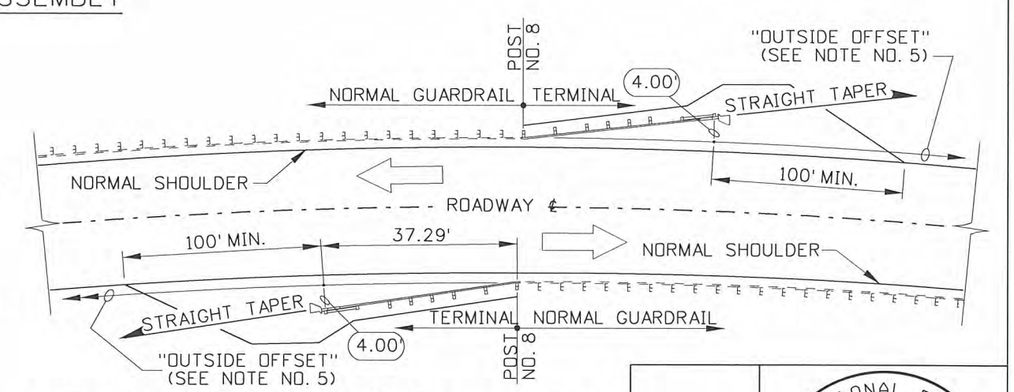

CURVED ROADWAY TERMINAL PLACEMENT

REVISIONS								
NO.	DATE	BY	NO.	DATE	BY	NO.	DATE	BY
1	1-03	MSM						
2	10-04	MSM						
3	5-06	MSM						
4	9-10	MGL						

SCALES SHOWN ARE FOR 11" X 17" PRINTS ONLY

CADD FILE NAME: g1f21010.std

DRAWING DATE: FEBRUARY, 2000

IDAHO TRANSPORTATION DEPARTMENT

BOISE IDAHO

ASSISTANT CHIEF ENGINEER (DEVELOPMENT)

CHIEF ENGINEER

STANDARD DRAWING

GUARDRAIL TERMINAL TYPE 5 ALTERNATE "B"

REQUIRES STD. DWGS. G-1-A-1 THRU G-1-A-4

English

STANDARD DRAWING NO. G-1-F-2

SHEET 1 OF 1

PROFESSIONAL ENGINEER REGISTERED 6506 10/26/2010 STATE OF IDAHO TED E. MASON

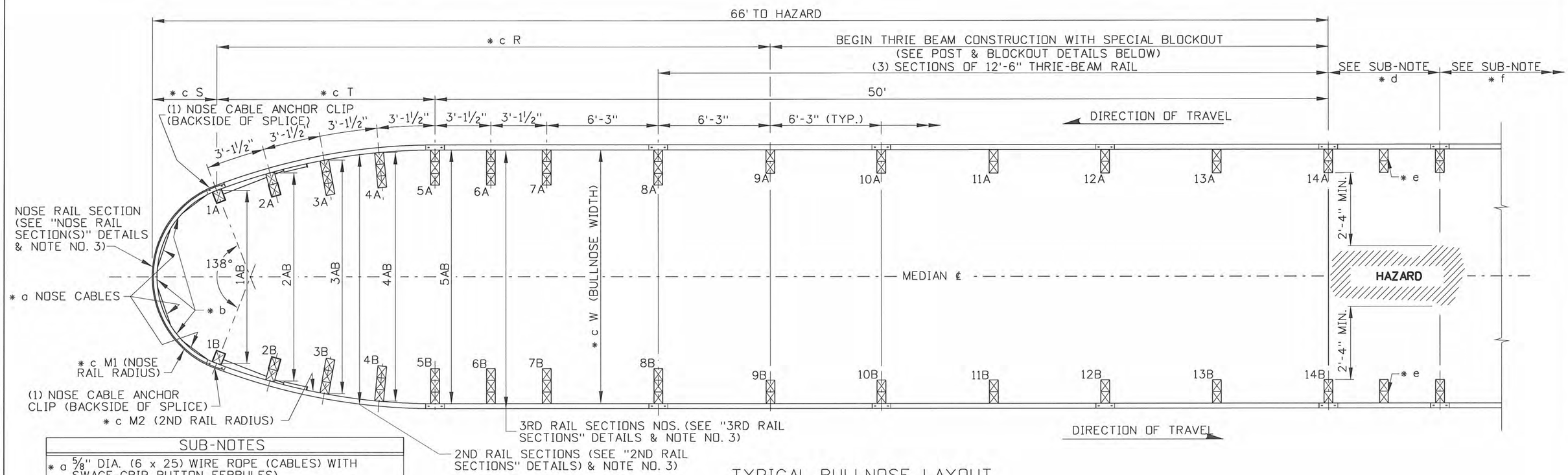

TYPICAL BULLNOSE LAYOUT

SUB-NOTES

- * a ⅝" DIA. (6 x 25) WIRE ROPE (CABLES) WITH SWAGE-GRIP BUTTON FERRULES)
- * b (6) ¼" DIA. U-BOLTS FOR (3) NOSE CABLE ANCHOR CLIPS SPACED AROUND INSIDE OF NOSE TO HOLD CABLES AT BACKSIDE OF THE RAIL.
- * c SEE "BULLNOSE DIMENSION TABLE" ON PAGE 3 OF 3.
- * d THRIE BEAM TO W-BEAM SYMMETRICAL TRANSITION ELEMENT (SEE STD. DWG. G-1-A-5).
- * e SEE STD. DWG G-1-E FOR TRANSITION ELEMENT CENTER BLOCKOUT DETAILS.
- * f INSTALL NORMAL W-BEAM GUARDRAIL OR APPROPRIATE TERMINAL.

NOTES

1. ALL GUARDRAIL AND ACCESSORIES SHALL CONFORM TO STANDARD DRAWINGS G-1-A-1 THROUGH G-1-A-5 FOR INSTALLATION DETAILS OF GUARDRAIL, GUARDRAIL POSTS, BLOCKOUTS, POST SPACING, AND GUARDRAIL BOLTING HARDWARE.

2. THE USE OF STEEL POSTS ON THE GUARDRAIL TERMINAL TYPE 6 (BULLNOSE GUARDRAIL SYSTEM) ARE NOT ALLOWED.

3. THE NOSE RAIL SECTION AND 2ND RAIL SECTIONS SHALL BE SLOTTED AND SHOP BENT. THE THIRD RAIL SECTIONS SHALL BE SLOTTED AND UN-BENT. THE SUBSEQUENT RAIL SECTIONS SHALL BE NORMAL THRIE BEAM (SEE RAIL\SECTION DETAILS).

4. THE SLACK IN THE NOSE CABLES SHALL BE EVENLY DISTRIBUTED BETWEEN THE CABLE CLIP FASTENERS AND POSTS NO. 1A & 1B.

5. THE OUTSIDE NUTS ON EACH END OF THE ANCHOR CABLE SHALL BE TORQUED TO A MINIMUM OF 100 FT. - LBS. AGAINST THE INSIDE NUTS.

6. NOT TO SCALE.

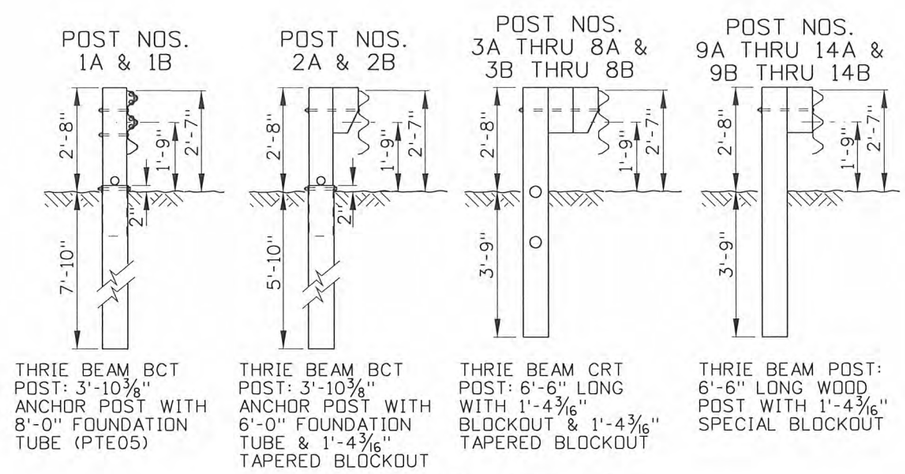

POST TYPE DETAILS

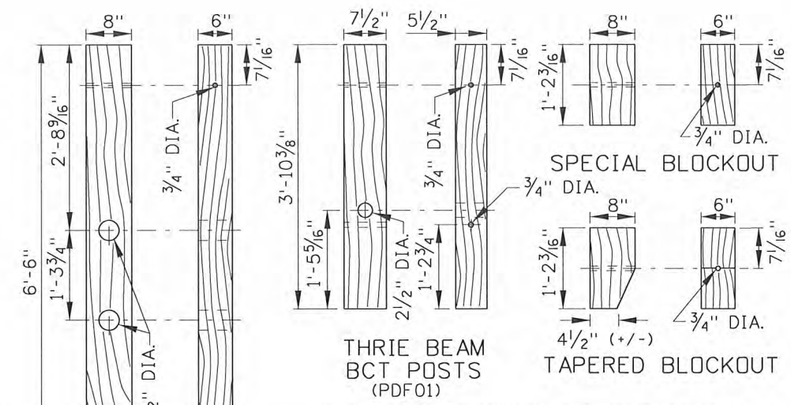

POST & BLOCKOUT DETAILS

REVISIONS								
NO.	DATE	BY	NO.	DATE	BY	NO.	DATE	BY
1	6-02	MSM						
2	10-03	MSM						
3	12-04	MSM						
4	5-06	MSM						
5	9-10	MGL						

SCALES SHOWN ARE FOR 11" X 17" PRINTS ONLY

CADD FILE NAME: glg_1010.std

DRAWING DATE: NOVEMBER, 2001

IDAHO TRANSPORTATION DEPARTMENT

BOISE IDAHO

ASSISTANT CHIEF ENGINEER (DEVELOPMENT)

CHIEF ENGINEER

STANDARD DRAWING

GUARDRAIL TERMINAL TYPE 6 OPTIONS 1, 2, & 3 (BULLNOSE GUARDRAIL SYSTEM)

REQUIRES SHEETS 2 OF 3 & 3 OF 3 &. STD. DWGS. G-1-A-1 THRU G-1-A-5

English

STANDARD DRAWING NO. G-1-G

SHEET 1 OF 3

PROFESSIONAL ENGINEER REGISTERED 6506 10/26/2010 STATE OF IDAHO TED E. MASON

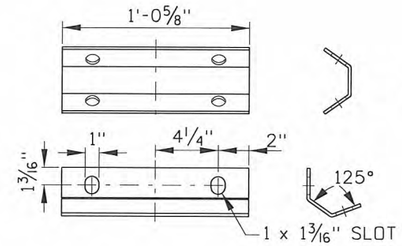

NOSE CABLE ANCHOR CLIP
(1'-0 5/8" x 6" x 1/4" STEEL PLATE (A 306))

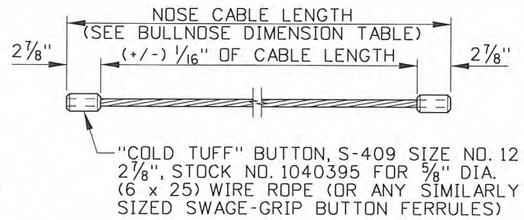

NOSE CABLE

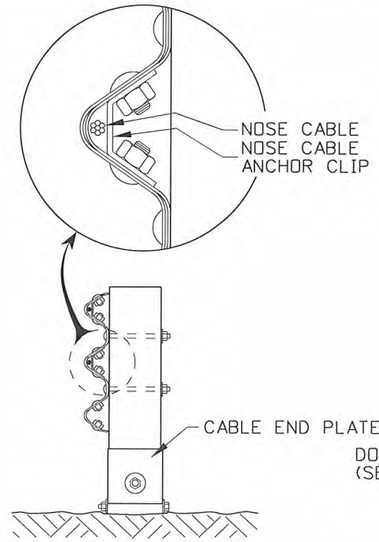

NOSE CABLE ASSEMBLY

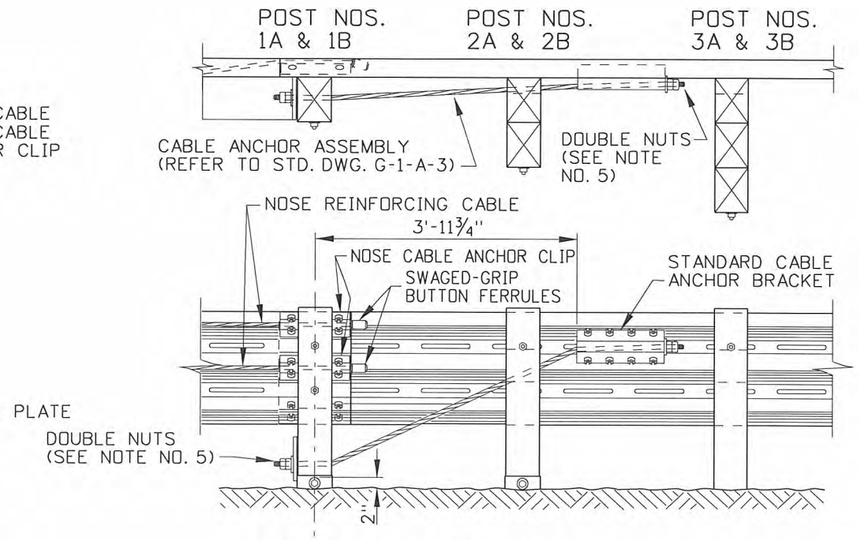

CABLE ANCHOR & BRACKET ASSEMBLY
(REFER TO STANDARD DRAWING G-1-A-3)

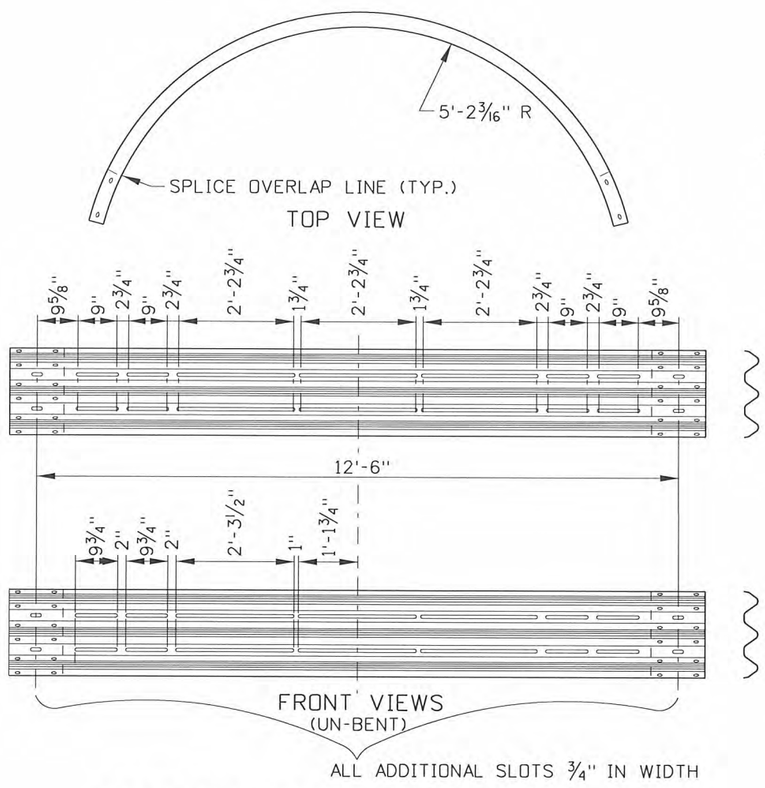

NOSE RAIL SECTION - OPTION 1

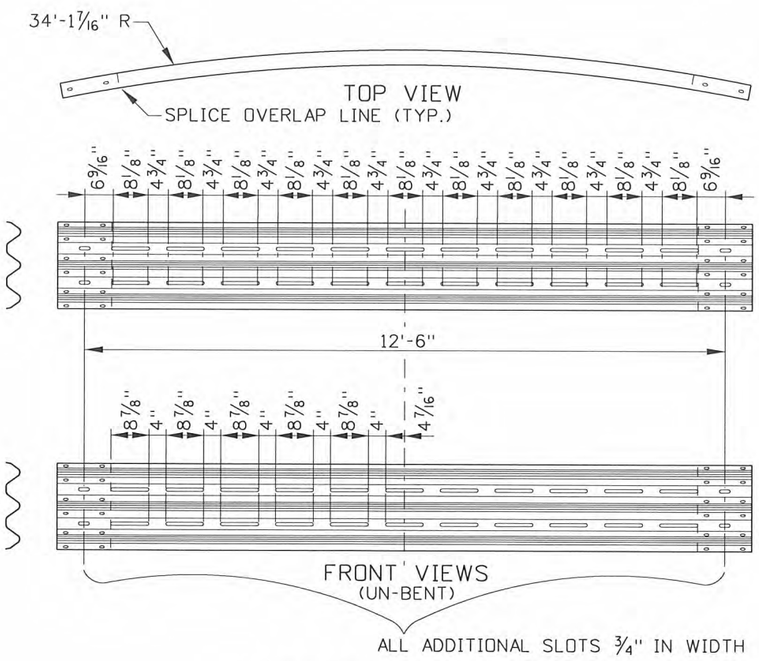

2ND RAIL SECTIONS -
OPTIONS 1, 2, & 3

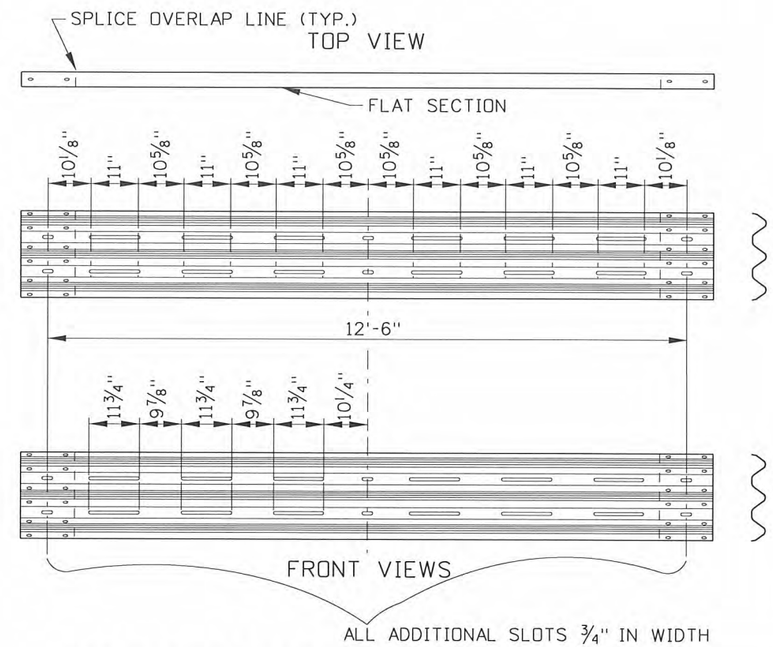

3RD RAIL SECTIONS -
OPTIONS 1, 2, & 3

REVISIONS								
NO.	DATE	BY	NO.	DATE	BY	NO.	DATE	BY
1	6-02	MSM						
2	10-03	MSM						
3	12-04	MSM						
4	5-06	MSM						
5	9-10	MGL						

SCALES SHOWN ARE FOR 11" X 17" PRINTS ONLY

CADD FILE NAME: g1g_1010.std

DRAWING DATE: NOVEMBER, 2001

IDAHO TRANSPORTATION DEPARTMENT

BOISE IDAHO

ASSISTANT CHIEF ENGINEER (DEVELOPMENT)

CHIEF ENGINEER

STANDARD DRAWING

GUARDRAIL TERMINAL TYPE 6
OPTIONS 1, 2, & 3
(BULLNOSE GUARDRAIL SYSTEM)

REQUIRES SHEETS 1 OF 3 & 3 OF 3
&. STD. DWGS. G-1-A-1 THRU G-1-A-5

English

STANDARD DRAWING NO.
G-1-G

SHEET 2 OF 3

PROFESSIONAL ENGINEER REGISTERED 6506 10/26/2010 STATE OF IDAHO TED E. MASON

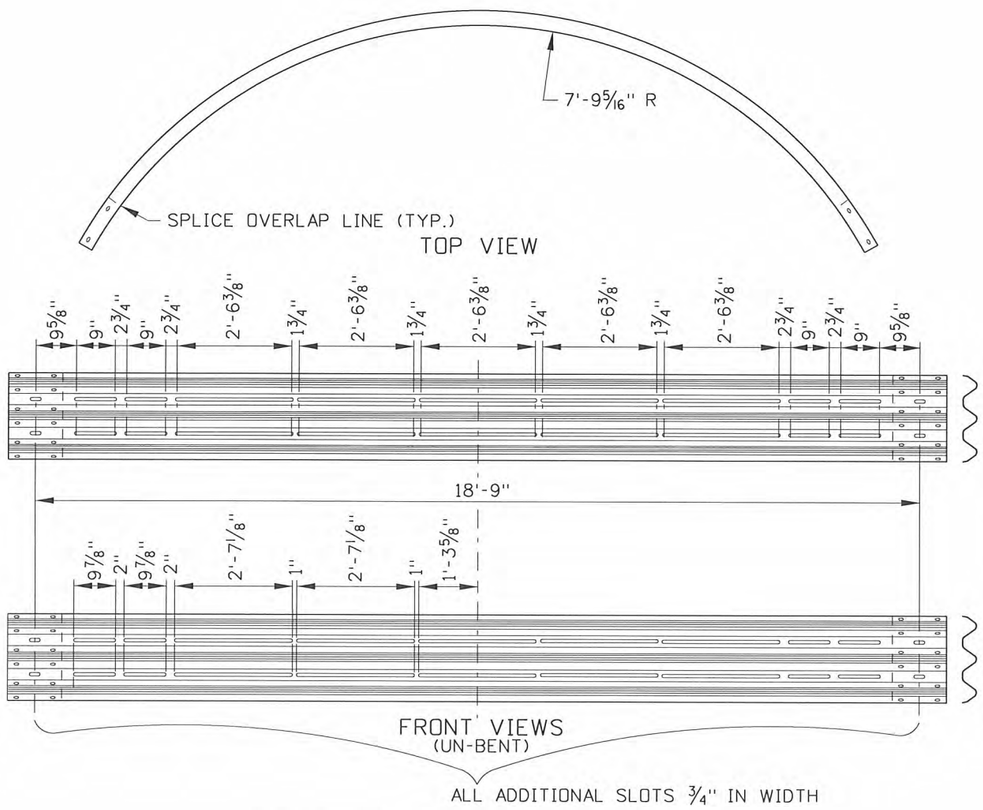

NOSE RAIL SECTION - OPTION 2

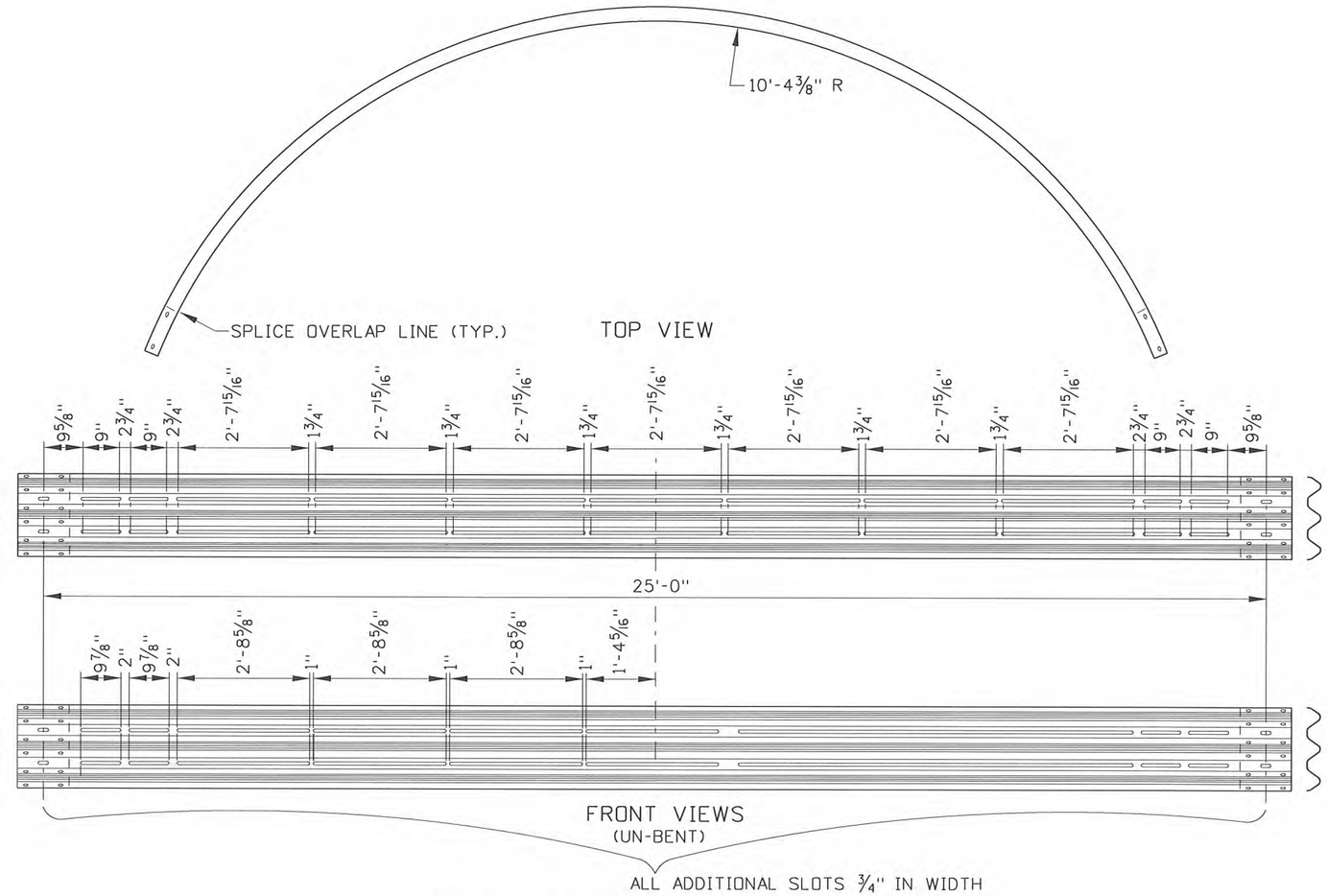

NOSE RAIL SECTION - OPTION 3

BULLNOSE DIMENSION TABLE

BULLNOSE DESIGN OPTION	IN INCHES											
	INTERIOR DIMENSIONS						EXTERIOR DIMENSIONS			NOSE RAIL RADII		NOSE CABLE
	1AB	2AB	3AB	4AB	5AB	W	R	S	T	M1	M2	
OPTION 1	9'-8	11'-8	13'-1	13'-11	14'-2 1/2	14'-9 1/8	30'-11 3/4	3'-7 1/4	12'-2 3/4	5'-2 3/16	34'-1 7/16	14'-4 3/4
OPTION 2	14'-6 3/8	16'-6	17'-11	18'-9 1/8	19'-0 5/8	19'-0 5/8	30'-11 3/4	5'-3 1/4	12'-2 3/4	7'-9 5/16	34'-1 7/16	20'-9 5/8
OPTION 3	19'-4 3/8	21'-4	22'-9	23'-7	23'-10 3/4	23'-10 3/4	30'-11 3/4	6'-11 1/4	12'-2 3/4	10'-4 3/8	34'-1 7/16	27'-8 3/8

REVISIONS

NO.	DATE	BY	NO.	DATE	BY	NO.	DATE	BY
1	6-02	MSM						
2	10-03	MSM						
3	12-04	MSM						
4	5-06	MSM						
5	9-10	MGL						

SCALES SHOWN ARE FOR 11" X 17" PRINTS ONLY

CADD FILE NAME: glg_1010.std

DRAWING DATE: NOVEMBER, 2001

IDAHO TRANSPORTATION DEPARTMENT

BOISE IDAHO

ASSISTANT CHIEF ENGINEER (DEVELOPMENT)

CHIEF ENGINEER

STANDARD DRAWING

GUARDRAIL TERMINAL TYPE 6
OPTIONS 1, 2, & 3
(BULLNOSE GUARDRAIL SYSTEM)

REQUIRES SHEETS 1 OF 3 & 2 OF 3
&. STD. DWGS. G-1-A-1 THRU G-1-A-5

English

STANDARD DRAWING NO.

G-1-G

SHEET 3 OF 3

PROFESSIONAL ENGINEER
REGISTERED
6506
10/26/2010
STATE OF IDAHO
TED E. MASON

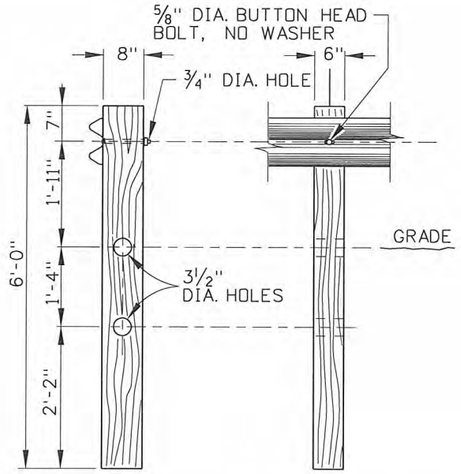

MODIFIED CRT TIMBER POST

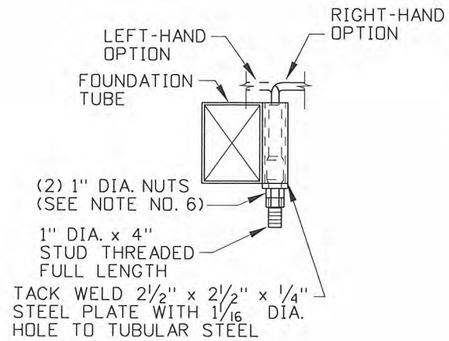

ANCHOR DETAIL

(SEE NOTE NO. 9)

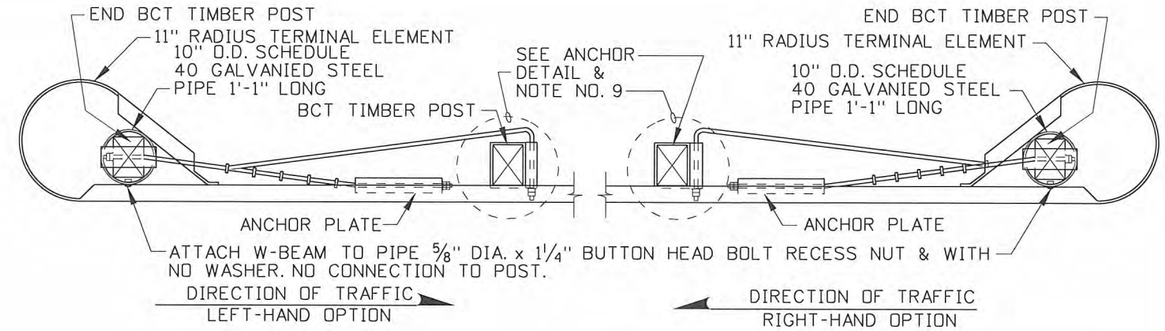

TABLE OF MAXIMUM TAPERS	
DESIGN SPEED	TAPER
70	15:1
60	13:1
50	11:1
40	9:1

PLACEMENT TABLE					
DELTA ANGLE	RAIL RADIUS	NO. RAIL SECTIONS	NO. CRT POSTS	AREA FREE OF FIXED OBJECTS	
				L	W
75° -105°	8'	1	5	25'	15'
75° -105°	16'	2	7	30'	15'
75° -105°	24'	3	9	40'	20'
75° -80°	32'	3	9	40'	20'
>80° -100°	32'	4	11	40'	20'
>100° -105°	32'	5	13	40'	20'

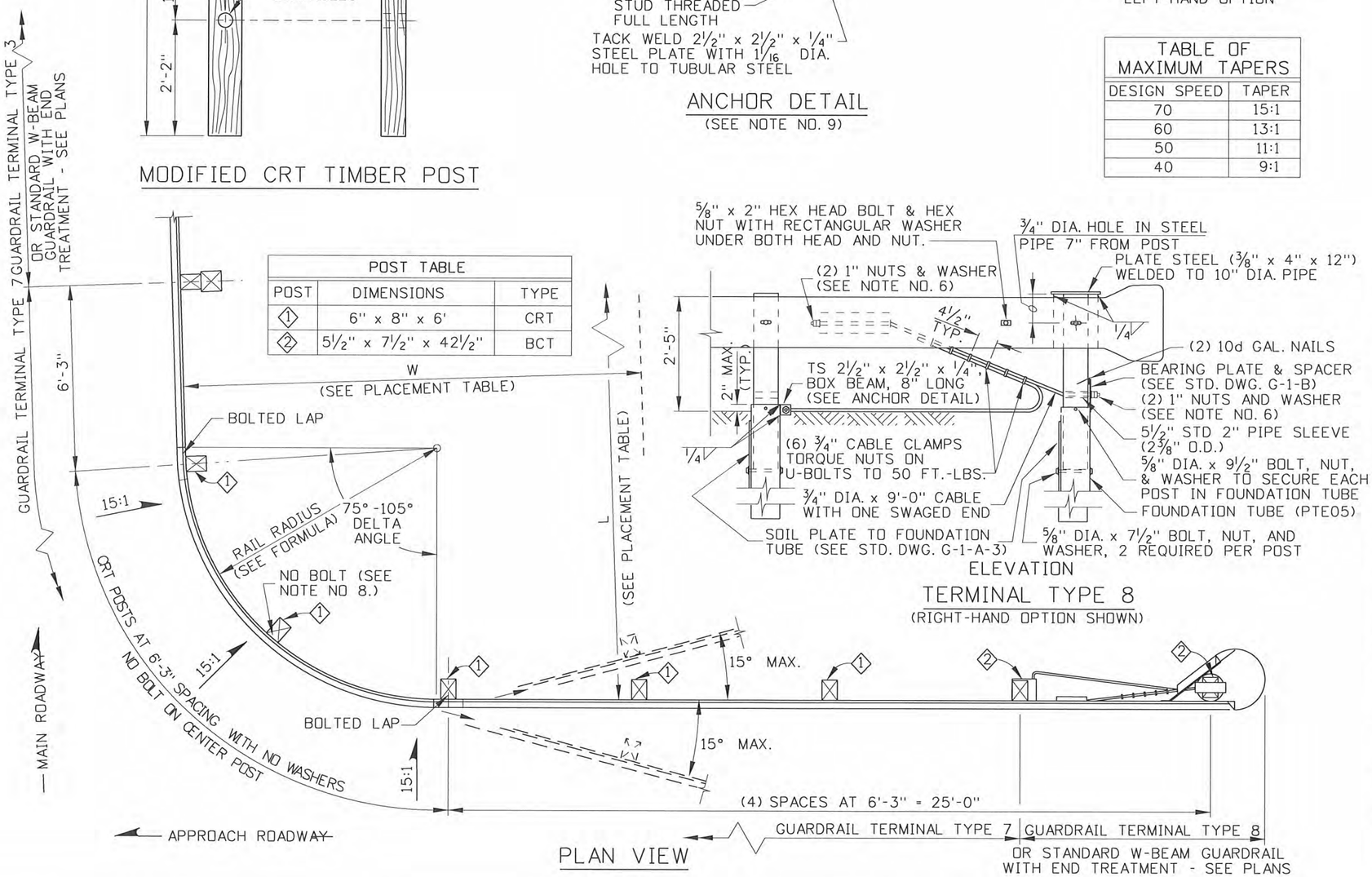

PLAN VIEW

POST TABLE		
POST	DIMENSIONS	TYPE
1	6" x 8" x 6'	CRT
2	5 1/2" x 7 1/2" x 42 1/2"	BCT

NOTES

1. THE TYPE 8 TERMINAL SHALL ONLY BE USED OUTSIDE THE CLEAR ZONE OR WHEN THE APPROACH ROADWAY SPEED IS 35 MPH OR LESS. OTHERWISE AN APPROPRIATE NCHRP 350 TERMINAL IS REQUIRED.

2. THE GUARDRAIL ALONG THE APPROACH ROADWAY MAY BE ANGLED 15° TO EITHER SIDE OF THE PERPENDICULAR AXIS TO THE MAIN ROADWAY. HOWEVER, FLARE RATES ALONG ROADWAYS WITH 35 MPH OR GREATER SPEEDS MUST FOLLOW STANDARD TAPER RATES (SEE "TABLE OF MAXIMUM TAPERS").

3. THE ROADWAY IN FRONT THE CURVED PORTION OF THE TERMINAL SHALL BE 15:1 OR FLATTER. GRADE TERRAIN TO A 10:1 SLOPE OR FLATTER FOR 2' BEYOND THE GUARDRAIL POST, THEN A 2:1 OR FLATTER SLOPE. A 6:1 OR FLATTER SLOPE IS DESIRABLE. IF THE FILL HEIGHT IS GREATER THAN 30' OTHER SOLUTIONS SHOULD BE CONSIDERED. AN AREA FREE OF FIXED OBJECTS SHALL BE MAINTAINED BEHIND THE GUARDRAIL.

4. THIS DRAWING REQUIRES STANDARD DRAWINGS G-1-A-1 THROUGH G-1-A-4 AND IS SUBJECT TO THE W-BEAM GUARDRAIL INSTALLATION REQUIREMENTS AND HARDWARE/ACCESSORY SPECIFICATIONS.

5. ALL TERMINAL HARDWARE ITEMS SHALL MEET THE SPECIFICATIONS IN THE "A GUIDE TO STANDARDIZED HIGHWAY BARRIER HARDWARE" (CURRENT EDITION). ALL WELDING SHALL MEET THE REQUIREMENTS OF THE AMERICAN WELDING SOCIETY.

6. WHEN FASTENING THE CABLE ENDS THE OUTSIDE NUTS SHALL BE TORQUED AGAINST INSIDE NUTS A MINIMUM OF 100 FT.-LBS.

7. ALL CURVED GUARDRAIL SHALL BE SHOP BENT, FIELD BENDING WILL NOT BE ALLOWED.

8. ALL CURVED RAIL SECTIONS SHALL BE 12'-6" IN LENGTH AND BOLTED TO THE POSTS ONLY AT THE LAPS.

9. THE ANCHOR CABLE FROM POST #1 TO POST #2 MUST BE ATTACHED ON THE FAR SIDE OF THE FOUNDATION TUBE FOR LEFT-HAND INSTALLATIONS.

10. NOT TO SCALE.

REVISIONS								
NO.	DATE	BY	NO.	DATE	BY	NO.	DATE	BY
1	5-90	GB	6	5-06	MSM			
2	4-93	MSM	7	11-06	MSM			
3	4-99	MSM	8	9-10	MGL			
4	3-03	MSM						
5	12-04	MSM						

SCALES SHOWN ARE FOR 11" X 17" PRINTS ONLY

CADD FILE NAME: glh_1010.std

DRAWING DATE: MAY, 1989

IDAHO TRANSPORTATION DEPARTMENT

BOISE IDAHO

ASSISTANT CHIEF ENGINEER (DEVELOPMENT)

CHIEF ENGINEER

STANDARD DRAWING

GUARDRAIL TERMINALS TYPE 7 & 8

REQUIRES STD. DWGS. G-1-A-1 THRU G-1-A-4

English

STANDARD DRAWING NO.

G-1-H

SHEET 1 OF 1

PROFESSIONAL ENGINEER REGISTERED 6506 STATE OF IDAHO TED E. MASON

10/26/2010

POST TABLE		
POST NO.	POST TYPE	RECT. WASHER
1 & 2	STANDARD WOOD POST WITH BLOCKOUT	YES
3	STEEL TUBE WITH WOOD BREAKAWAY POST	YES
4	STANDARD WOOD POST WITH BLOCKOUT OR STEEL POST WITH MODIFIED BLOCKOUT	NO

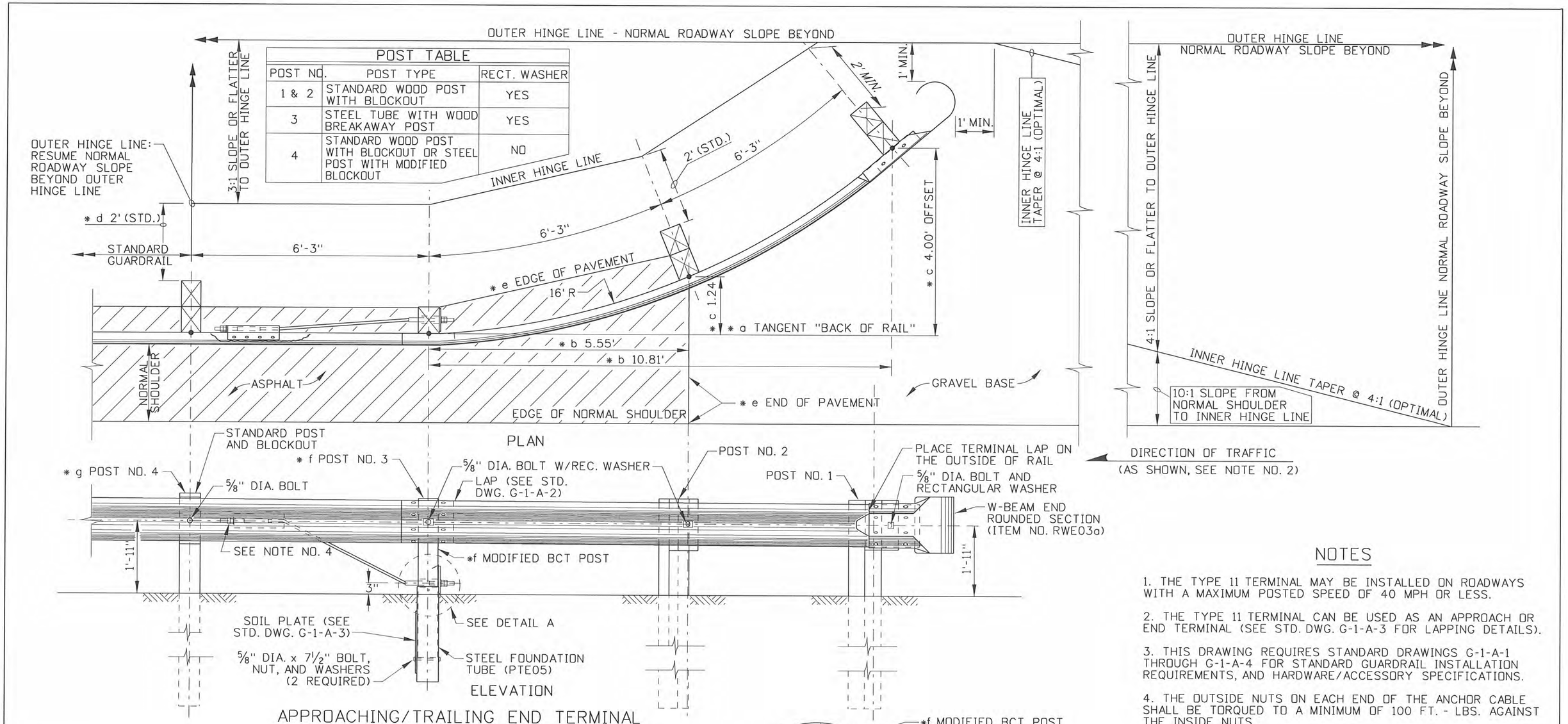

APPROACHING/TRAILING END TERMINAL

SUB-NOTES

* a ALL POST SPACING MEASUREMENTS ARE MADE ALONG THE (BACK OF RAIL).
* b TANGENT DISTANCE IS MEASURED BEGINNING AT THE LAST TERMINAL POST'S HORIZONTAL CENTERLINE TO A POINT ALONG THE TANGENT (BACK OF RAIL) WHICH CORRESPONDS TO THE RAILS POINT OF OFFSET MEASUREMENT.
* c OFFSET DISTANCE IS MEASURED FROM THE POINT ALONG THE TANGENT (BACK OF RAIL) (SEE SUB-NOTE "* b") TO A POINT BACK OF THE TERMINAL RAIL.
* d THE INNER HINGE LINE IS 2' BEHIND THE BACK OF THE GUARDRAIL TERMINAL POSTS. A 1' DISTANCE IS ALLOWED IN DIFFICULT TERRAIN (SEE STD. DWG. G-1-A-1).
* e PAVE ALONG THE FACE OF THE POSTS TO THE APPROACHING EDGE OF THE SUBSEQUENT POST (POST NO. 3) BEYOND POST NO. 2, THEN RETURN TO THE NORMAL SHOULDER.
* f WOODEN BREAKAWAY POST WITH STEEL FOUNDATION TUBE (SEE STD DWG G-1-A-3).
* g THE LAST TERMINAL POST - BEGIN STANDARD GUARDRAIL INSTALLATION (SEE STD. DWGS. G-1-A-1 THROUGH G-1-A-4).

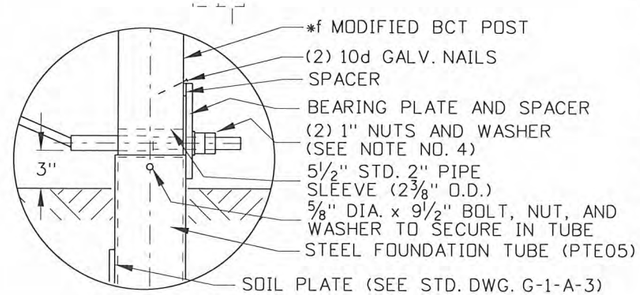

DETAIL A

NOTES

1. THE TYPE 11 TERMINAL MAY BE INSTALLED ON ROADWAYS WITH A MAXIMUM POSTED SPEED OF 40 MPH OR LESS.
2. THE TYPE 11 TERMINAL CAN BE USED AS AN APPROACH OR END TERMINAL (SEE STD. DWG. G-1-A-3 FOR LAPPING DETAILS).
3. THIS DRAWING REQUIRES STANDARD DRAWINGS G-1-A-1 THROUGH G-1-A-4 FOR STANDARD GUARDRAIL INSTALLATION REQUIREMENTS, AND HARDWARE/ACCESSORY SPECIFICATIONS.
4. THE OUTSIDE NUTS ON EACH END OF THE ANCHOR CABLE SHALL BE TORQUED TO A MINIMUM OF 100 FT. - LBS. AGAINST THE INSIDE NUTS.
5. FILL THE VOID BETWEEN STEEL TUBE AND POST WITH EXPANDED RIGID POLYSTYRENE PLASTIC FOAM.
6. W-BEAM IS LAPPED AWAY FROM THE APPROACHING TRAFFIC.
7. FOUNDATION TUBE AND BLOCKOUT DIMENSIONS SHALL BE AS INDICATED IN THE AASHTO "A GUIDE TO STANDARDIZED HIGHWAY BARRIER HARDWARE".
8. NOT TO SCALE.

REVISIONS								
NO.	DATE	BY	NO.	DATE	BY	NO.	DATE	BY
1	12-04	MSM						
2	5-06	MSM						
3	9-10	MGL						

SCALES SHOWN ARE FOR 11" X 17" PRINTS ONLY

CADD FILE NAME: gli_1010.std

DRAWING DATE: JUNE, 2003

IDAHO TRANSPORTATION DEPARTMENT

BOISE IDAHO

ASSISTANT CHIEF ENGINEER (DEVELOPMENT)

CHIEF ENGINEER

STANDARD DRAWING

GUARDRAIL TERMINAL TYPE 11

REQUIRES STD. DWGS. G-1-A-1 THRU G-1-A-4

English

STANDARD DRAWING NO. G-1-I

SHEET 1 OF 1

PROFESSIONAL ENGINEER REGISTERED 6506 STATE OF IDAHO TED E. MASON 12/26/2010

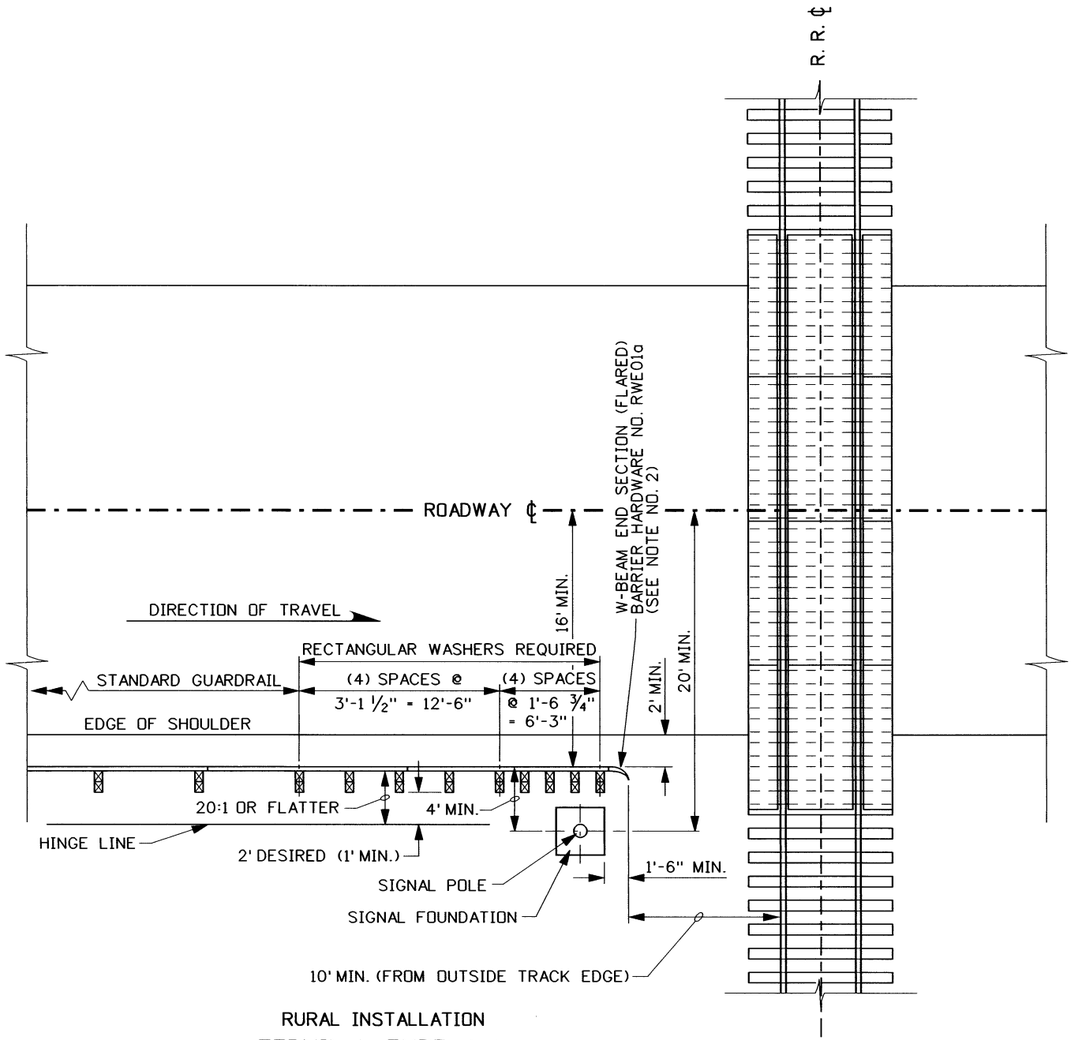

RURAL INSTALLATION

TERMINAL TYPE 4-A

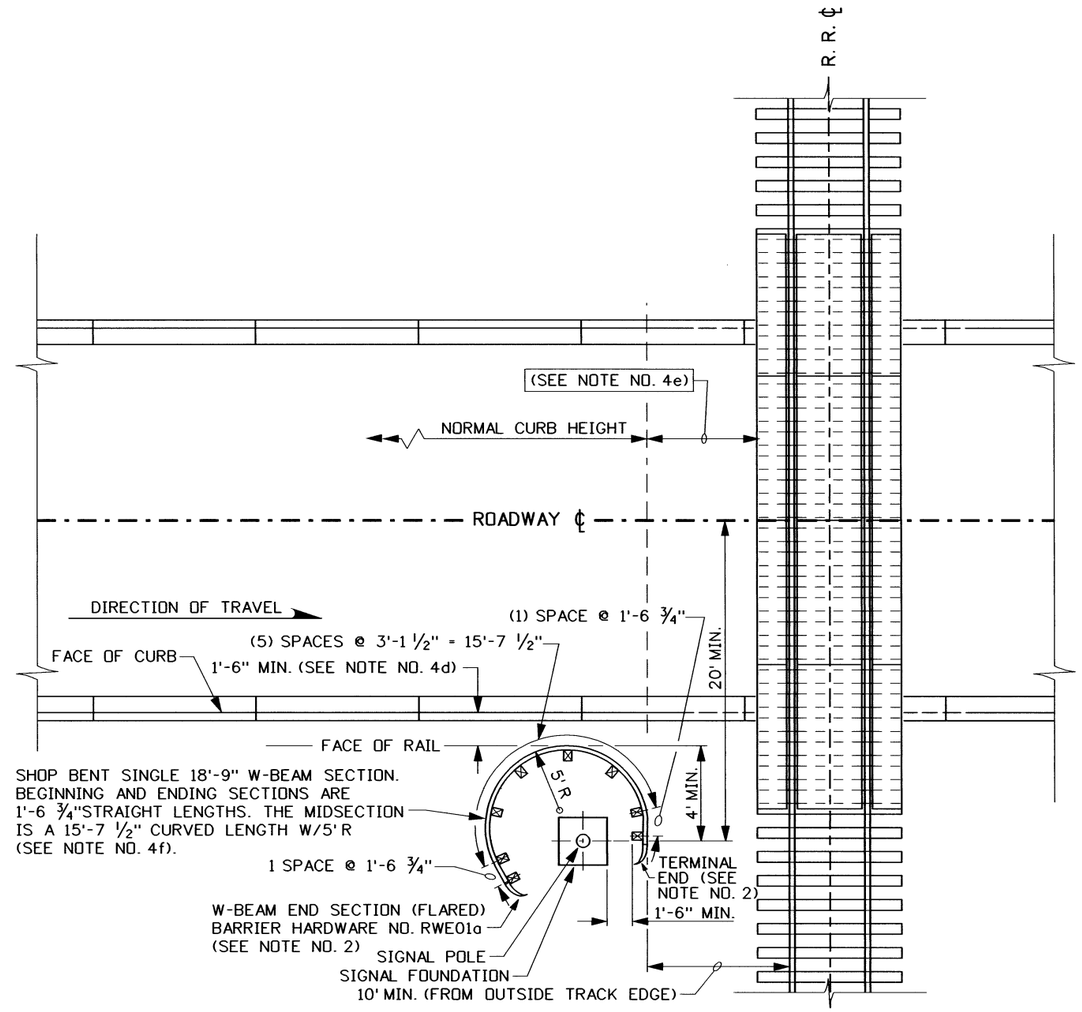

URBAN RAILROAD SIGNAL BARRIER

TERMINAL TYPE 4-B

(SEE NOTE NO. 4)

NOTES

1. THIS DRAWING REQUIRES STANDARD DRAWINGS G-1-A-1 THROUGH G-1-A-4 AND IS SUBJECT TO THE W-BEAM GUARDRAIL INSTALLATION REQUIREMENTS AND HARDWARE/ACCESSORY SPECIFICATIONS.
2. THE COST OF TERMINAL ENDS SHALL BE INCLUDED IN THE COST OF THESE INSTALLATION(S). THE TERMINAL TYPE 4-B SHALL BE PAID FOR ONLY AS W-BEAM GUARDRAIL.
3. RECTANGULAR WASHERS ARE REQUIRED ON ALL BOLTS EXCEPT THE TERMINAL END CONNECTIONS.
4. WHEN A TERMINAL TYPE 4-B IS TO BE INSTALLED THE FOLLOWING CRITERIA MUST BE MET:
   a. THE NEED FOR GUARDRAIL SHALL NOT BE BASED SOLELY UPON THE RAILROAD CROSSING FEATURES AT A CROSSING, BUT MUST BE REQUESTED BY THE RAILROAD.
4. CONT'D.
   b. THE POSTED SPEED IS 40 mph OR LESS.
   c. PEDESTRIAN TRAFFIC SHALL BE ACCOMMODATED WITH NORMAL WIDTH SIDEWALKS.
   d. WHEN NO PEDESTRIAN TRAFFIC IS PRESENT THE FACE OF RAIL SHALL BE A MINIMUM OF 1'-6" BEHIND THE FACE OF CURB.
   e. THE CURB AND/OR GUTTER SHALL BE TAPERED AND FLATTENED TO MATCH FINISH GRADE AT THE EDGE OF PLANKING (REFER TO STANDARD DRAWING R-2).
   f. THE METAL RAIL SHALL BE ATTACHED DIRECTLY TO THE POSTS WITHOUT BLOCKOUTS.
5. NOT TO SCALE.

REVISIONS

NO.	DATE	BY	NO.	DATE	BY	NO.	DATE	BY
1	4-93	MSM	5	5-06	MSM			
2	12-95	GET						
3	10-00	MSM						
4	6-04	MSM						
5	10-04	MSM						

SCALES SHOWN ARE FOR 11" X 17" PRINTS ONLY

CADD FILE NAME g1j_0506.std

DRWG. ORIG. DATE: APRIL, 1990

IDAHO TRANSPORTATION DEPARTMENT

BOISE IDAHO

ASSISTANT CHIEF ENGINEER (DEVELOPMENT)

CHIEF ENGINEER

STANDARD DRAWING

GUARDRAIL TERMINAL TYPES 4-A & 4-B

REQUIRES STD. DWGS. G-1-A-1 THRU G-1-A-4 (WITH CURB/GUTTER STD. DWG. R-2)

English

STANDARD DRWG. NO.

G-1-J

SHEET 1 OF 1

PROFESSIONAL ENGINEER * LAND SURVEYOR REGISTERED 2240 5/3/06 STATE OF IDAHO MILFORD MILLER

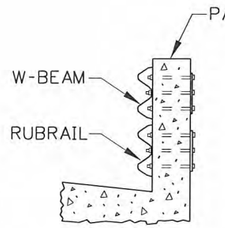

SECTION A-A

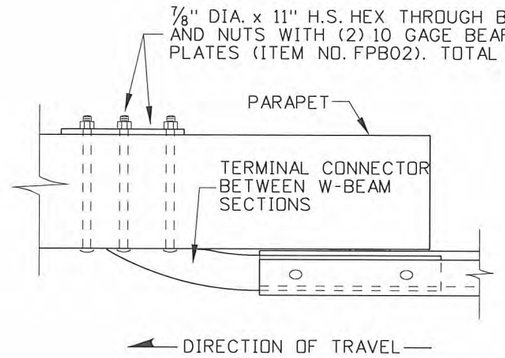

DETAIL A

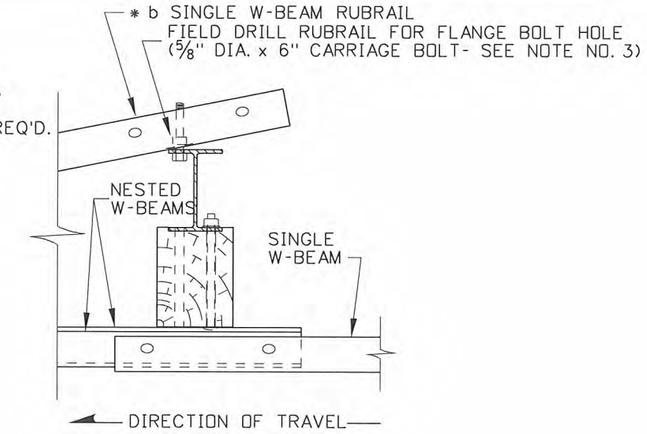

DETAIL B

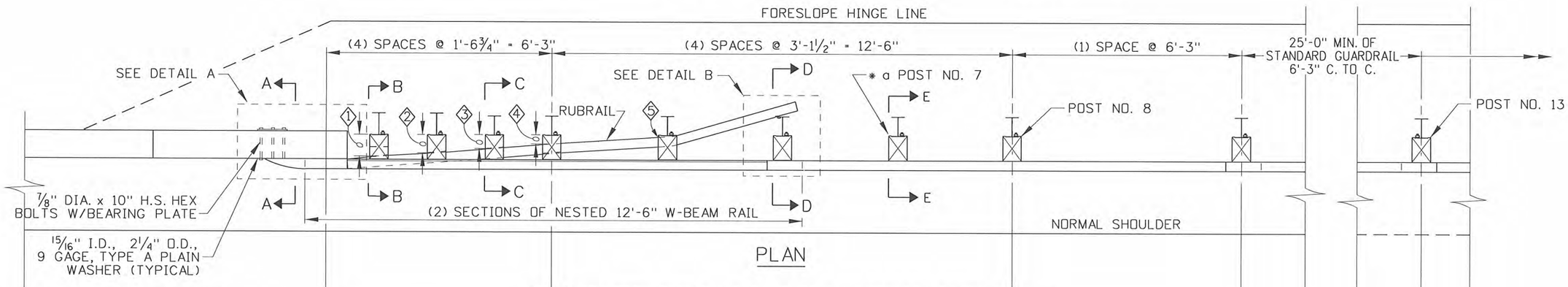

PLAN

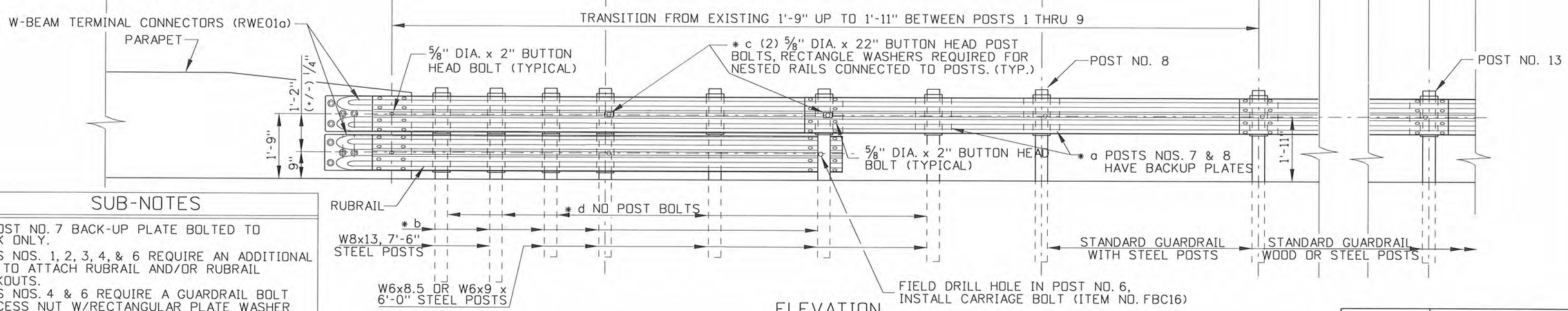

ELEVATION

SUB-NOTES

* a AT POST NO. 7 BACK-UP PLATE BOLTED TO BLOCK ONLY.
* b POSTS NOS. 1, 2, 3, 4, & 6 REQUIRE AN ADDITIONAL HOLE TO ATTACH RUBRAIL AND/OR RUBRAIL BLOCKOUTS.
* c POSTS NOS. 4 & 6 REQUIRE A GUARDRAIL BOLT & RECESS NUT W/RECTANGULAR PLATE WASHER UNDER THE BOLT HEAD AND A STEEL WASHER UNDER THE NUT.
* d DO NOT BOLT W-BEAM OR RUBRAIL W-BEAM TO POSTS NOS. 1, 2, 3, 5, & 7.

REVISIONS

NO.	DATE	BY	NO.	DATE	BY	NO.	DATE	BY
1	7-92	MSM	6	5-06	MSM			
2	8-00	MSM	7	9-10	PLR			
3	1-01	MSM						
4	6-01	MSM						
5	10-04	MSM						

SCALES SHOWN ARE FOR 11" X 17" PRINTS ONLY

CADD FILE NAME: g1k_1010.std

DRAWING DATE: MARCH, 1992

IDAHO TRANSPORTATION DEPARTMENT

BOISE IDAHO

ASSISTANT CHIEF ENGINEER (DEVELOPMENT)

CHIEF ENGINEER

STANDARD DRAWING

GUARDRAIL TERMINAL TYPE 9

REQUIRES SHEET 2 OF 2 & STD. DWGS. G-1-A-1 THRU G-1-A-4

English

STANDARD DRAWING NO.

G-1-K

SHEET 1 OF 2

PROFESSIONAL ENGINEER REGISTERED 6506 STATE OF IDAHO TED E. MASON 10/26/2010

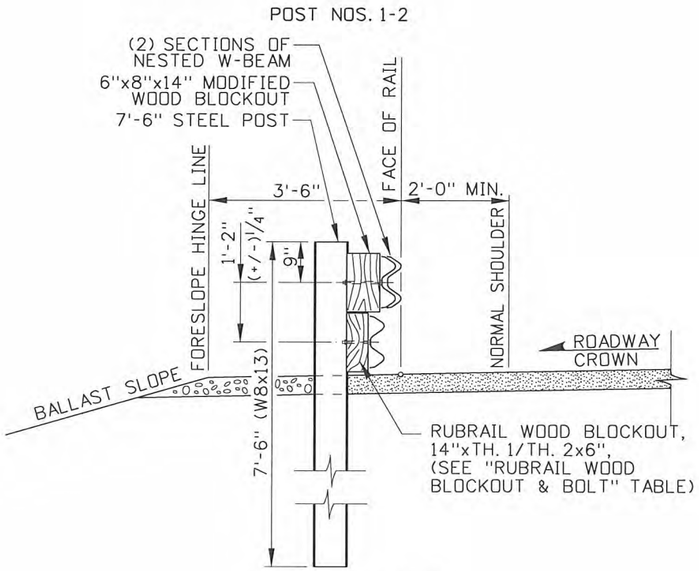

SECTION B-B

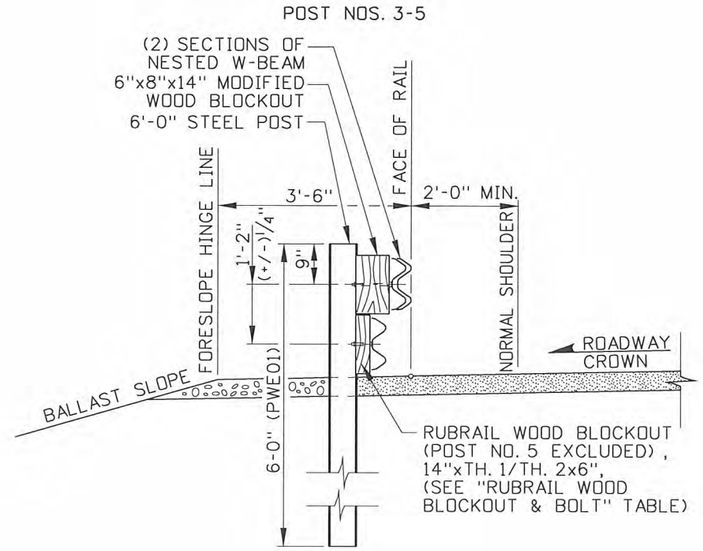

SECTION C-C

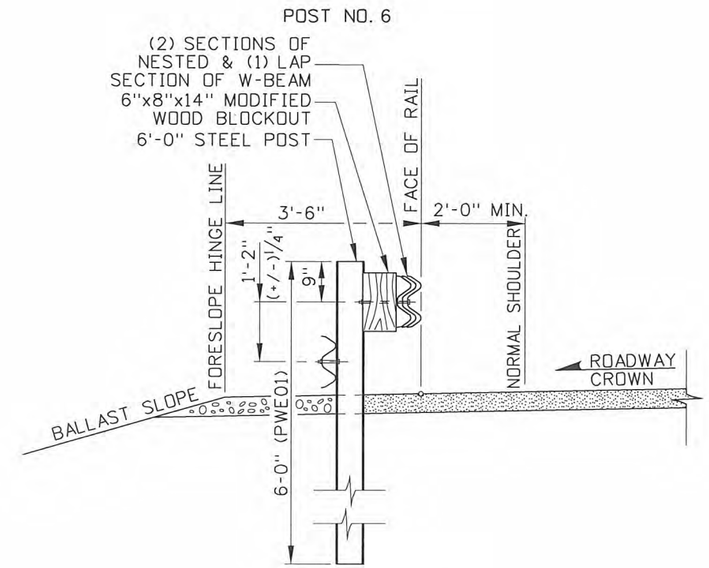

SECTION D-D

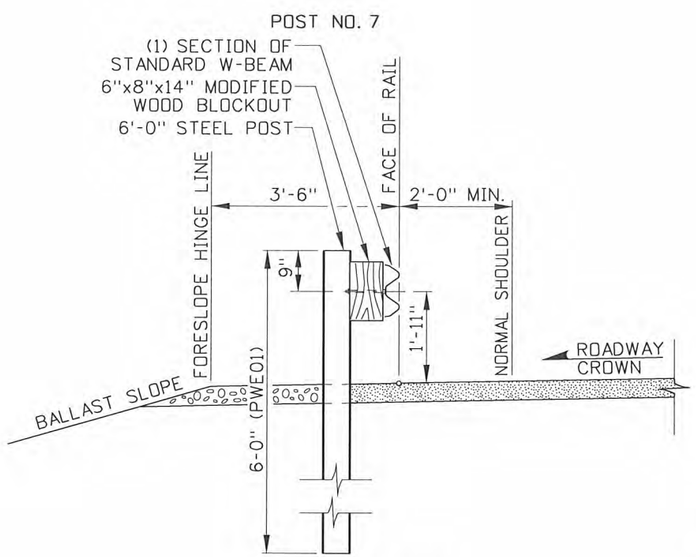

SECTION E-E

TABLE OF MAXIMUM TAPERS	
DESIGN SPEED (mph)	TAPER
75	16:1
70	15:1
65	14:1
60	13:1
55	12:1
50	11:1
45	10:1
40	9:1
≤35	8:1

RUBRAIL WOOD BLOCKOUT & BOLTS			
POST NO.	* THICKNESS 1	* THICKNESS 2	BOLT SIZE
1	7 1/4"	6 3/4"	5/8" DIA. x 10"
2	6"	5 1/2"	5/8" DIA. x 8"
3	4 3/4"	4 1/4"	5/8" DIA. x 8"
4	3 1/2"	3"	5/8" DIA. x 6"
5	NO BLOCKOUT		5/8" DIA. x 4"
6	RUBRAIL END POST		5/8" DIA. x 4"

* SEE RUBRAIL BLOCKOUT DETAIL

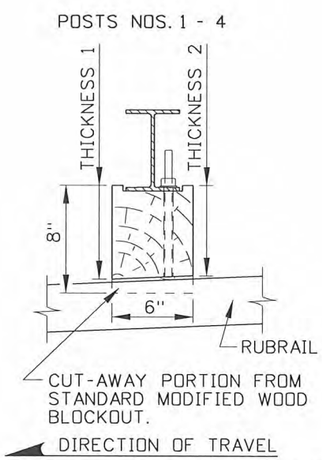

RUBRAIL BLOCKOUT DETAIL

NOTES

1. THIS TERMINAL IS TO BE USED AS A RETROFIT FOR THE OLD STYLE TYPE 3 TERMINALS. FOR NEW INSTALLATION USE TYPE 3 TERMINAL AS SHOWN ON STD. DWG. G-1-E.
2. SEE STANDARD DRAWINGS G-1-A-1 THROUGH G-1-A-4 FOR INSTALLATION DETAILS, POST AND BLOCKOUT DETAILS FOR W-BEAM GUARDRAIL AND GUARDRAIL HARDWARE.
3. ALL BOLTS FOR RUBRAIL BEAM AND WOOD BLOCKOUTS WILL HAVE A MINIMUM OF 5" OF COURSE THREADING.
4. W-BEAM MEASUREMENTS ARE MADE ALONG THE FACE OF RAIL FROM THE CENTER OF RAIL TO THE ROADWAY SURFACE. RUBRAIL MEASUREMENTS ARE FROM THE CENTER OF RAIL TO THE CENTER OF RUBRAIL.
5. GUARDRAIL FOR END SHOE SHALL BE LAPPED IN THE DIRECTION OF NEAREST TRAFFIC LANE TO PREVENT SNAGGING, SEE DETAILS A & B.
6. THE RUBRAIL MAY BE SHOP BENT TO FACILITATE INSTALLATION.
7. USE THE "TABLE OF MAXIMUM TAPERS" WHEN TAPERING GUARDRAIL TO MATCH BRIDGE PARAPET.
8. NOT TO SCALE.

REVISIONS								
NO.	DATE	BY	NO.	DATE	BY	NO.	DATE	BY
1	7-92	MSM	6	5-06	MSM			
2	8-00	MSM	7	9-10	PLR			
3	1-01	MSM						
4	6-01	MSM						
5	10-04	MSM						

SCALES SHOWN ARE FOR 11" X 17" PRINTS ONLY

CADD FILE NAME: glk_1010.std

DRAWING DATE: MARCH, 1992

IDAHO TRANSPORTATION DEPARTMENT

BOISE IDAHO

ASSISTANT CHIEF ENGINEER (DEVELOPMENT)

CHIEF ENGINEER

STANDARD DRAWING

GUARDRAIL TERMINAL TYPE 9

REQUIRES SHEET 1 OF 2 & STD. DWGS. G-1-A-1 THRU G-1-A-4

English

STANDARD DRAWING NO.

G-1-K

SHEET 2 OF 2

PROFESSIONAL ENGINEER REGISTERED 6506 10/26/2010 STATE OF IDAHO TED E. MASON

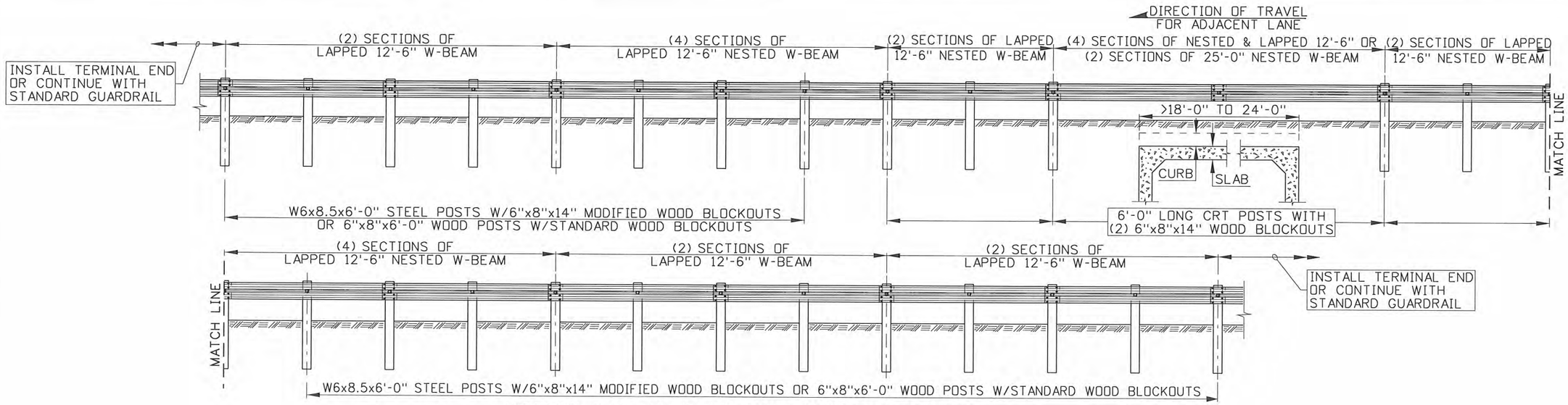

GREATER THAN 18'-0" TO 24'-0" MINOR STRUCTURES

THREE POSTS MISSING OPTION

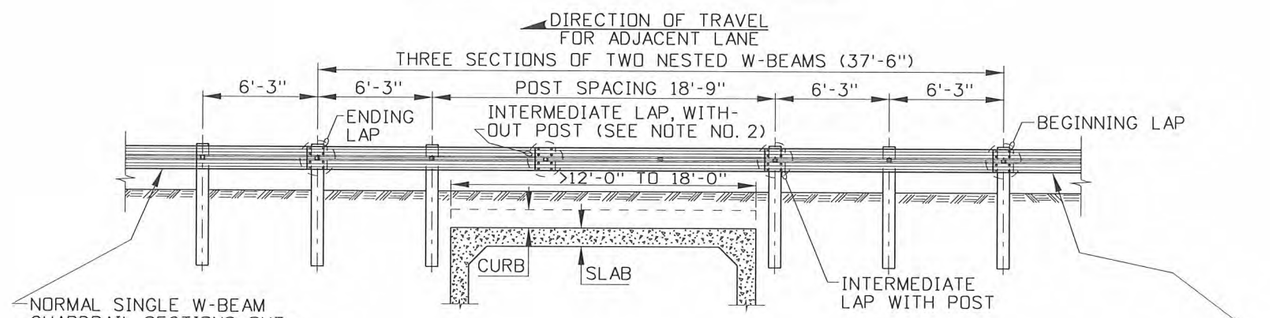

GREATER THAN 12'-0" TO 18'-0" MINOR STRUCTURES

TWO POSTS MISSING OPTION

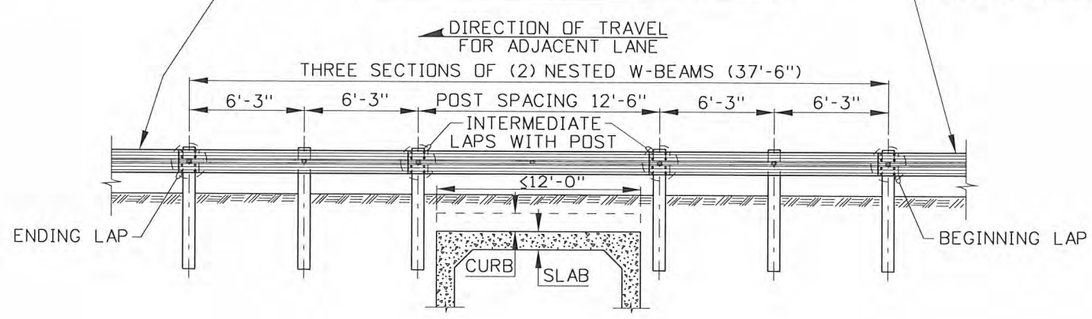

12' AND LESS MINOR STRUCTURES

ONE POST MISSING OPTION

REVISIONS								
NO.	DATE	BY	NO.	DATE	BY	NO.	DATE	BY
1	8-00	MSM	6	9-10	PLR			
2	6-01	MSM						
3	5-03	MSM						
4	10-04	MSM						
5	4-06	MSM						

SCALES SHOWN ARE FOR 11" X 17" PRINTS ONLY

CADD FILE NAME: gll_1010.std

DRAWING DATE: JULY, 1992

IDAHO TRANSPORTATION DEPARTMENT

BOISE IDAHO

ASSISTANT CHIEF ENGINEER (DEVELOPMENT)

CHIEF ENGINEER

STANDARD DRAWING

GUARDRAIL INSTALLATION FOR MINOR STRUCTURES & LARGE CULVERTS

REQUIRES SHEET 2 OF 2 & STD. DWGS. G-1-A-1 THRU G-1-A-4

English

STANDARD DRAWING NO.

G-1-L

SHEET 1 OF 2

PROFESSIONAL ENGINEER REGISTERED 6506 10/26/2010 STATE OF IDAHO TED E. MASON

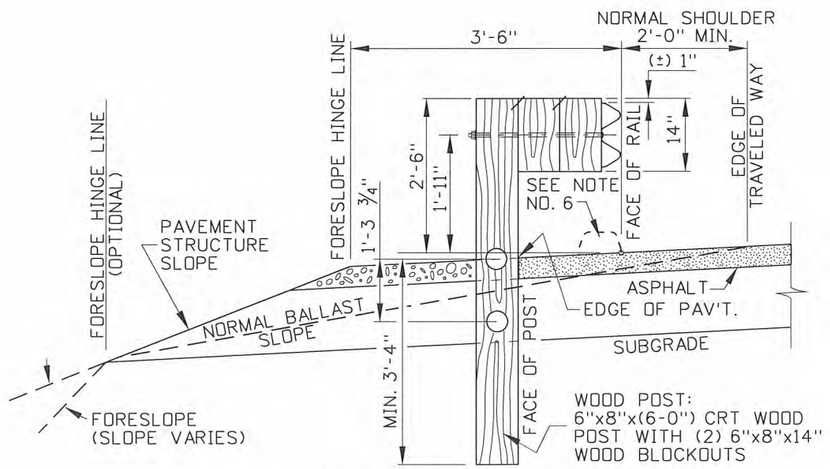

CRT POSTS & DOUBLE BLOCKOUTS

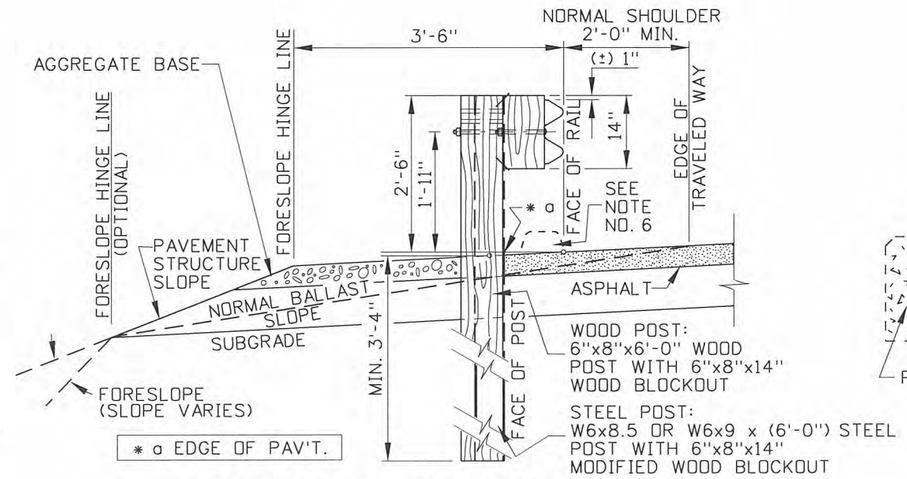

6'-0" POSTS & SINGLE BLOCKOUTS

TYPE A INSTALLATION

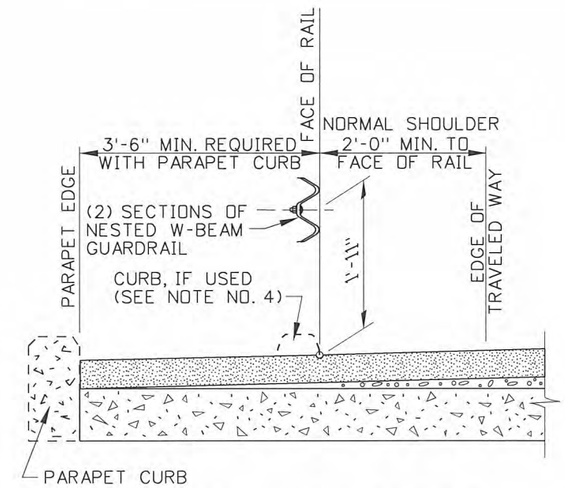

GUARDRAIL OVER STRUCTURE

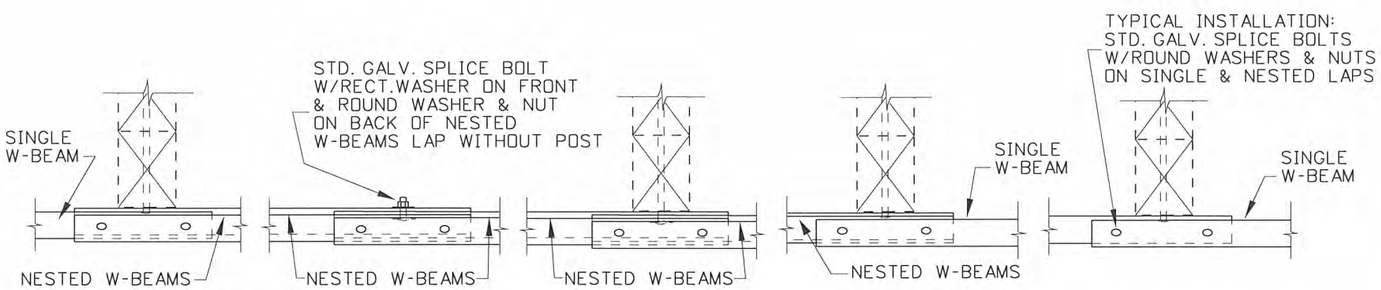

NESTED W-BEAM TO SINGLE LAP | * b NESTED W-BEAM LAP WITHOUT POST | NESTED W-BEAM LAP ON POST | SINGLE TO NESTED W-BEAM LAP | NORMAL W-BEAM LAP

* b WARNING: STAGERED LAPS ARE NOT ALLOWED (NESTED RAIL ENDS SHALL BE LAPED AT THE SAME LOCATION).

DIRECTION OF TRAVEL

LAPPING DETAILS

NOTES

1. THIS DRAWING REQUIRES STANDARD DRAWINGS G-1-A-1 THROUGH G-1-A-4 AND IS SUBJECT TO THE W-BEAM GUARDRAIL INSTALLATION REQUIREMENTS AND HARDWARE/ACCESSORY SPECIFICATIONS.

2. 25'-0" RAIL MAY BE USED TO ELIMINATE THE INTERMEDIATE LAP AT THE STRUCTURE.

3. REFER TO ITD BRIDGE STANDARD DRAWINGS FOR STRUCTURES GREATER THAN 24'.

4. REFER TO STANDARD DRAWING H-1-A WHEN CURB IS USED WITH THIS TERMINAL.

5. THE 3 POST ON EITHER SIDE OF OPENING NEED TO MAINTAIN A MINIMUM 3'-4" EMBEDMENT DEPTH. TO ACHIEVE THIS EMBEDMENT DEPTH, MOUNT RAIL AND BLOCKOUTS FLUSH WITH THE TOP OF THE POST WHILE KEEPING A 29" TOP OF RAIL HEIGHT.

6. NOT TO SCALE.

REVISIONS

NO.	DATE	BY	NO.	DATE	BY	NO.	DATE	BY
1	8-00	MSM	6	9-10	PLR			
2	6-01	MSM						
3	5-03	MSM						
4	10-04	MSM						
5	4-06	MSM						

SCALES SHOWN ARE FOR 11" X 17" PRINTS ONLY

CADD FILE NAME: g1l_1210.std

DRAWING DATE: JULY, 1992

IDAHO TRANSPORTATION DEPARTMENT

BOISE IDAHO

ASSISTANT CHIEF ENGINEER (DEVELOPMENT)

CHIEF ENGINEER

STANDARD DRAWING

GUARDRAIL INSTALLATION FOR MINOR STRUCTURES & LARGE CULVERTS

REQUIRES SHEET 2 OF 2 & STD. DWGS. G-1-A-1 THRU G-1-A-4

English

STANDARD DRAWING NO.

G-1-L

SHEET 2 OF 2

PROFESSIONAL ENGINEER REGISTERED 6506 12/6/2010 STATE OF IDAHO TED E. MASON

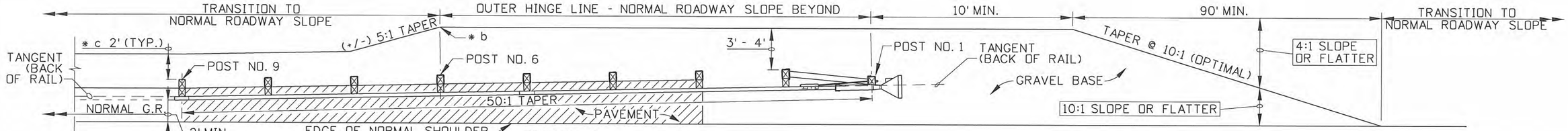

OPTION A

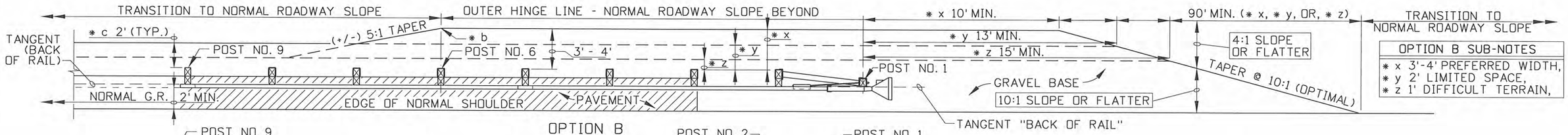

OPTION B

OPTION B SUB-NOTES
* x 3'-4' PREFERRED WIDTH,
* y 2' LIMITED SPACE,
* z 1' DIFFICULT TERRAIN,

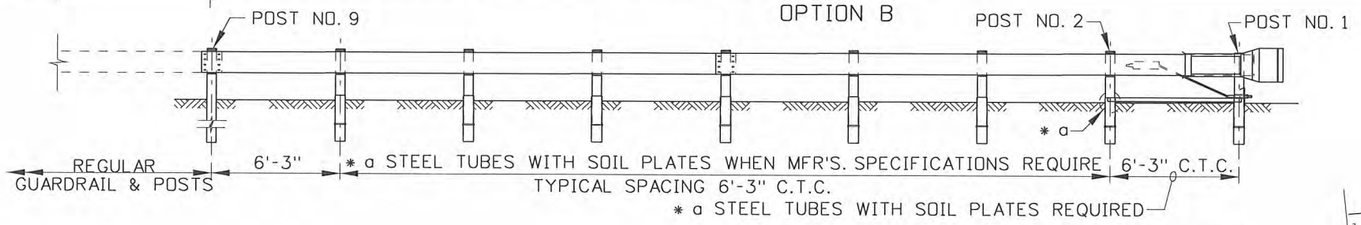

ELEVATION

OPTION DETAILS

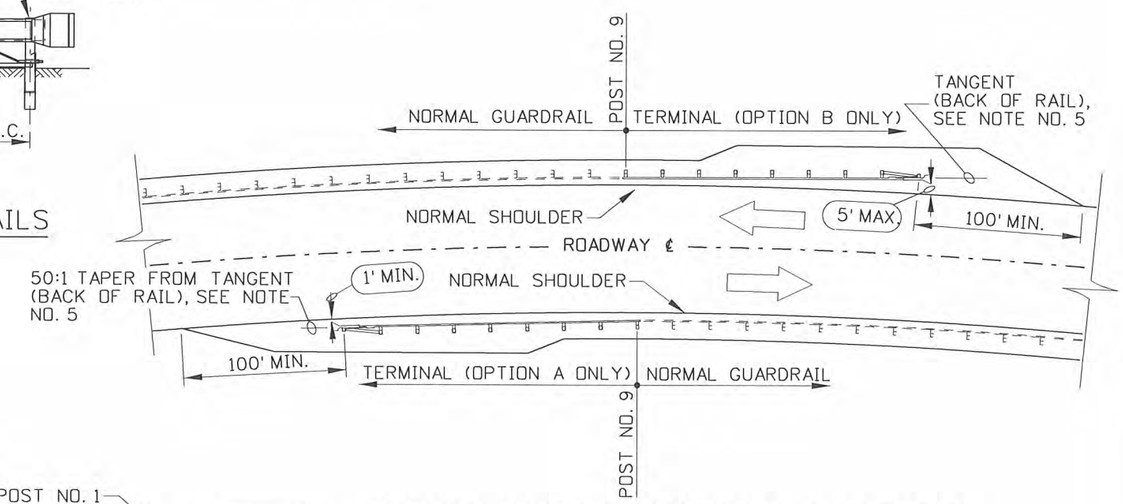

CURVED ROADWAY TERMINAL PLACEMENT

NOTES

1. ON TANGENT OR STRAIGHT SECTIONS OF ROADWAY "OPTION A" IS THE PREFERRED INSTALLATION. "OPTION B" IS TO BE INSTALLED WHEN SPACE DOES NOT PERMIT "OPTION A". "OPTION B" HAS THREE SUB-OPTIONS (* x, * y, & * z), * x IS THE MOST PREFERRED SUB-OPTION.

2. THE TERMINAL TYPE 10 MUST FOLLOW A STRAIGHT LINE OR A 50:1 STRAIGHT LINE TAPER AS SHOWN. THE TOTAL LAYOUT MUST MEET OR EXCEED THE REQUIREMENTS SET FORTH IN NATIONAL COOPERATIVE HIGHWAY RESEARCH PROGRAM REPORT 350 (TL-3),"RECOMMENDED PROCEDURES FOR THE SAFETY PERFORMANCE OF HIGHWAY FEATURES".

3. FOR INSTALLATION DETAILS OF GUARDRAIL, POSTS, BLOCKOUTS, AND FITTINGS REFER TO STANDARD DRAWINGS G-1-A-1 THROUGH G-1-A-4. THE EXTRUDED HEAD, AND OTHER ITEMS SHOWN IN THE DETAILS ARE FOR THE ET-2000 TERMINAL. FOR END TREATMENT DETAILS SPECIFIC TO THIS AND OTHER TERMINALS SEE THE INFORMATION PROVIDED BY THE MANUFACTURER. THE LIST OF VIABLE TERMINAL ENDS ARE: ET-2000, BEST, SKT 350, AND LET. AN "EQUIVALENT" TYPE 10 TERMINAL MUST MEET THE REQUIREMENTS FOR USE AS A "NCHRP 350 (TL-3) APPROVED TERMINAL".

4. THE OUTSIDE NUTS ON THE ANCHOR CABLE SHALL BE TORQUED AGAINST INSIDE NUT A MINIMUM OF 100 ft./lbs.

5. WHEN A TYPE 10 TERMINAL IS CONSTRUCTED ON A HORIZONTAL CURVE, PLACE THE TERMINAL OFF OF THE "TANGENT (BACK OF RAIL)". PLACE "OPTION A" ON A 50:1 TAPER FROM THE TANGENT (BACK OF RAIL) AT POST NO. 9. USE "OPTION B" ON OUTSIDE CURVES AND "OPTION A" ON INSIDE CURVES. DO NOT PLACE THE TYPE 10 TERMINAL ON THE INSIDE OF A GREATER THAN 8° HORIZONTAL CURVE.

6. NOT TO SCALE.

SUB- NOTES
* a TOP OF STEEL TUBES SHALL BE EXPOSED SAME AS POST NO. 1 (SEE DETAIL "A")
* b END GUARDRAIL PAD AT ℄ OF POST NO. 6, USE (+/-) 5:1 TAPER BACK TO BALLAST SHOULDER
* c 1' MIN. IN DIFFICULT TERRAIN (SEE STD. DWG. G-1-A-1)

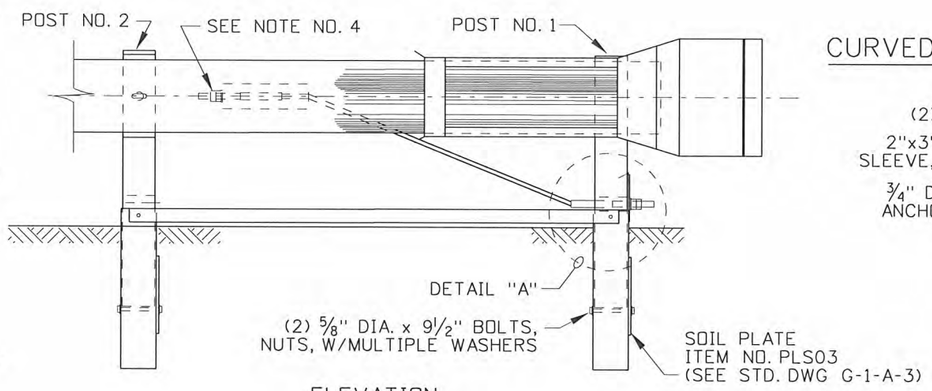

ELEVATION

EXTRUDED END & ANCHORAGE ASSEMBLY

(NOT TO SCALE)

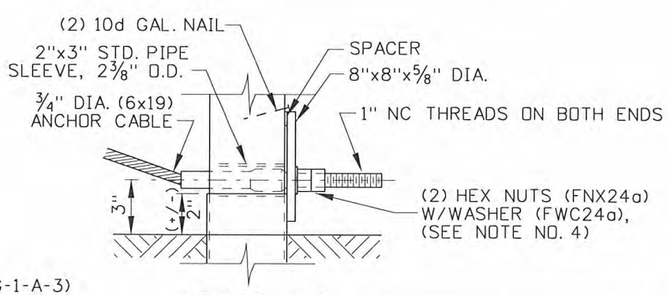

DETAIL "A"

(NOT TO SCALE)

REVISIONS								
NO.	DATE	BY	NO.	DATE	BY	NO.	DATE	BY
1	6-01	MSM						
2	1-04	MSM						
3	12-04	MSM						
4	5-06	MSM						
5	9-10	PLR						

SCALES SHOWN ARE FOR 11" X 17" PRINTS ONLY

CADD FILE NAME: g1m_1010.std

DRAWING DATE: JANUARY, 2000

IDAHO TRANSPORTATION DEPARTMENT

BOISE IDAHO

ASSISTANT CHIEF ENGINEER (DEVELOPMENT)

CHIEF ENGINEER

STANDARD DRAWING

GUARDRAIL TERMINAL TYPE 10

REQUIRES STD. DWGS. G-1-A-1 THRU G-1-A-4

English

STANDARD DRAWING NO.

G-1-M

SHEET 1 OF 1

PROFESSIONAL ENGINEER REGISTERED 6506 STATE OF IDAHO TED E. MASON

10/26/2010

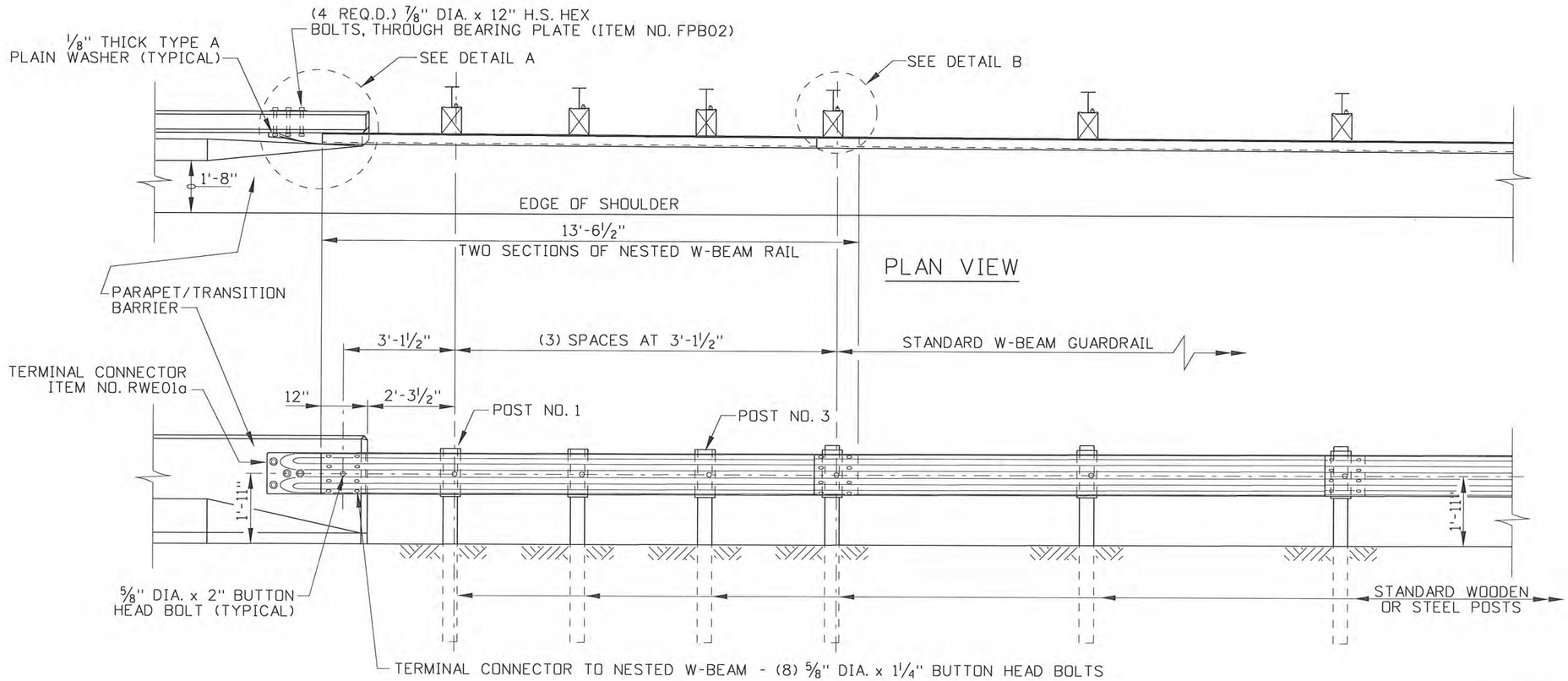

ELEVATION VIEW

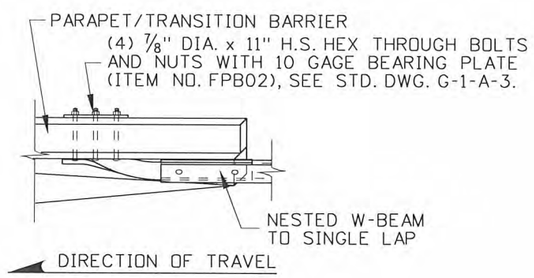

DETAIL A

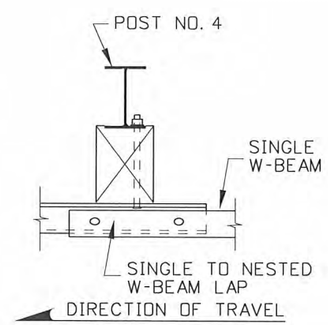

DETAIL B

NOTES

1. THE TYPE 12 TERMINAL MAY BE INSTALLED AS AN APPROACH OR END TERMINAL ON ROADWAYS WITH A MAXIMUM POSTED SPEED OF 45 MPH OR LESS.

2. THIS DRAWING REQUIRES STANDARD DRAWINGS G-1-A-1 THROUGH G-1-A-4 AND IS SUBJECT TO THE W-BEAM GUARDRAIL INSTALLATION REQUIREMENTS AND HARDWARE/ACCESSORY SPECIFICATIONS.

3. ALL GUARDRAIL INCLUDING THE TERMINAL CONNECTOR SHALL BE LAPPED IN THE DIRECTION OF NEAREST TRAFFIC LANE TO PREVENT SNAGGING, SEE DETAILS A & B.

4. THE TERMINAL TYPE 12 AS SHOWN MEETS THE REQUIREMENTS SET FORTH IN NATIONAL COOPERATIVE HIGHWAY RESEARCH PROGRAM (NCHRP) REPORT 350 FOR TL-2, "RECOMMENDED PROCEDURES FOR THE SAFETY PERFORMANCE OF HIGHWAY FEATURES".

5. NOT TO SCALE.

REVISIONS

NO.	DATE	BY	NO.	DATE	BY	NO.	DATE	BY
1	5-06	MSM						
2	9-10	PLR						

SCALES SHOWN ARE FOR 11" X 17" PRINTS ONLY

CADD FILE NAME: gln_1010.std

DRAWING DATE: NOVEMBER, 2005

IDAHO TRANSPORTATION DEPARTMENT

BOISE IDAHO

ASSISTANT CHIEF ENGINEER (DEVELOPMENT)

CHIEF ENGINEER

STANDARD DRAWING

GUARDRAIL TERMINAL TYPE 12

REQUIRES STD. DWGS. G-1-A-1 THRU G-1-A-4

English

STANDARD DRAWING NO.

G-1-N

SHEET 1 OF 1

PROFESSIONAL ENGINEER REGISTERED 6506 STATE OF IDAHO TED E. MASON

10/26/2010

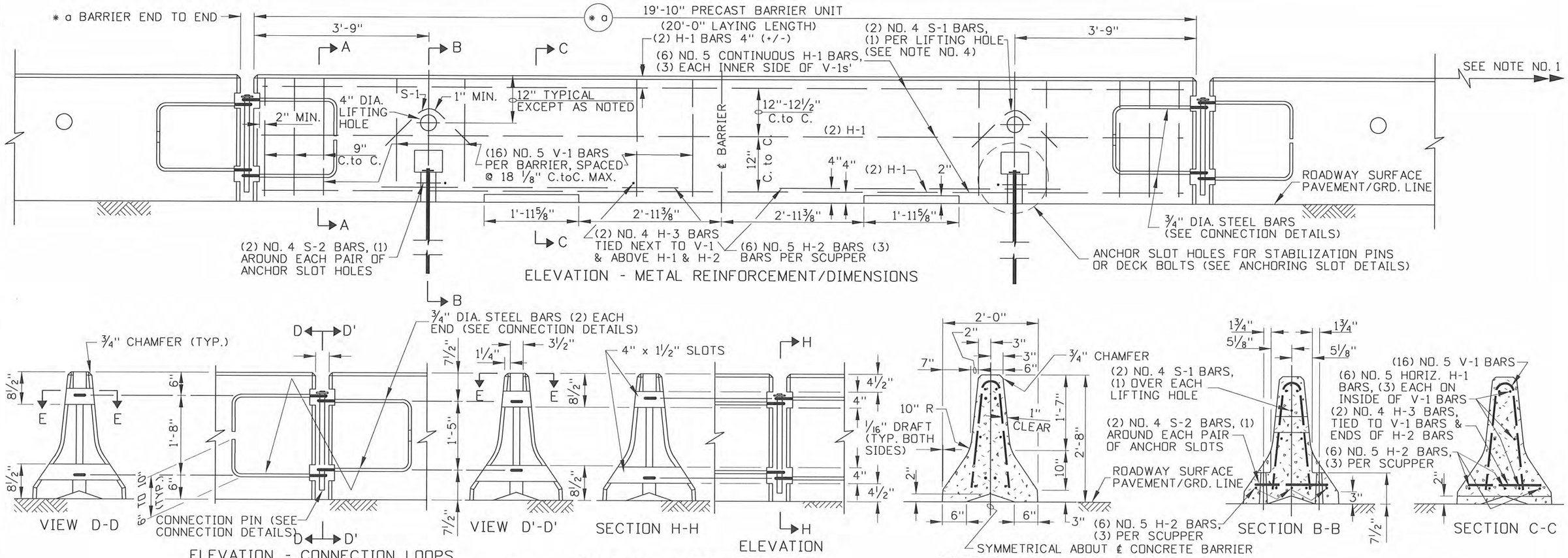

ELEVATION - METAL REINFORCEMENT/DIMENSIONS

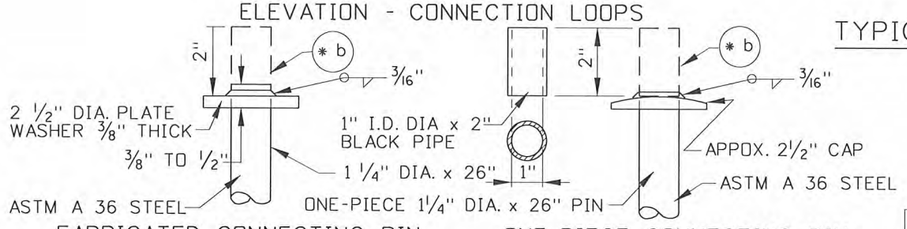

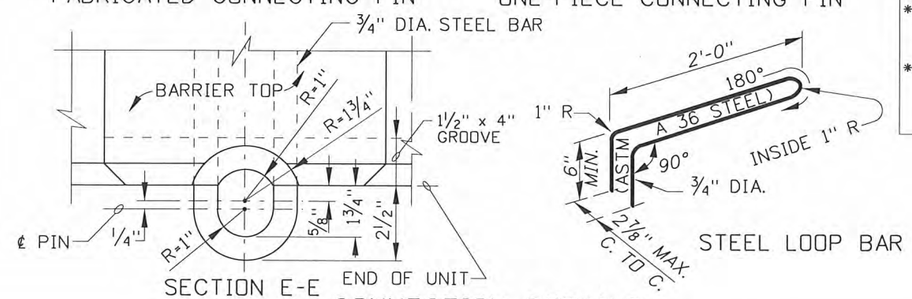

CONNECTION DETAILS

SUB-NOTES
* a PINNED BARRIER END TO END SPACE CAN VARY, (+/-) ¼", TYPICAL LAYOUT LENGTH IS 20' ℄ PIN TO ℄ PIN).
* b WITH DELINEATOR ATTACHED: REQUIRES CONNECTING PIN 1 ¼" DIA. x 28" LONG, OR MODIFICATION OF THE ONE-PIECE PIN, REFER TO STD. DWG. G-3-A.

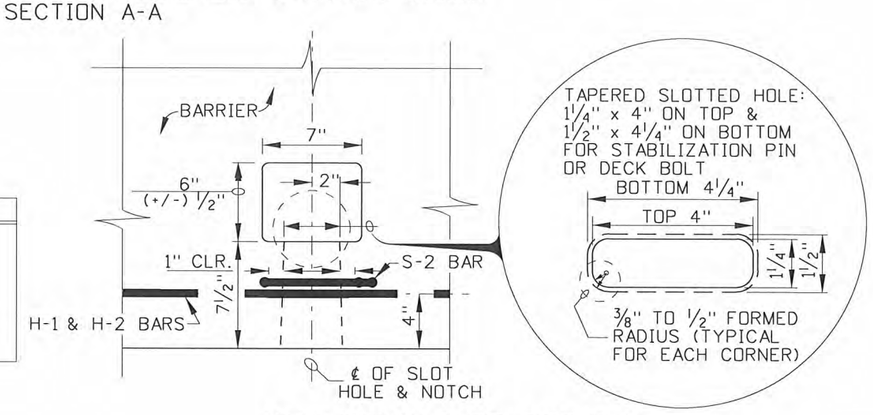

ANCHORING SLOT DETAILS

REVISIONS								
NO.	DATE	BY	NO.	DATE	BY	NO.	DATE	BY
1	8-00	MSM	6	6-04	MSM			
2	12-01	MSM	7	10-04	MSM			
3	7-02	MSM	8	9-10	PLR			
4	7-03	MSM						
5	9-03	MSM						

SCALES SHOWN ARE FOR 11" X 17" PRINTS ONLY

CADD FILE NAME: g2a11010.std

DRAWING DATE: NOVEMBER, 1999

IDAHO TRANSPORTATION DEPARTMENT

BOISE IDAHO

ASSISTANT CHIEF ENGINEER (DEVELOPMENT)

CHIEF ENGINEER

STANDARD DRAWING

20' CONCRETE BARRIER

REQUIRES SHEET 2 OF 2

English

STANDARD DRAWING NO.

G-2-A-1

SHEET 1 OF 2

PROFESSIONAL ENGINEER REGISTERED 6506 STATE OF IDAHO TED E. MASON 10/26/2010

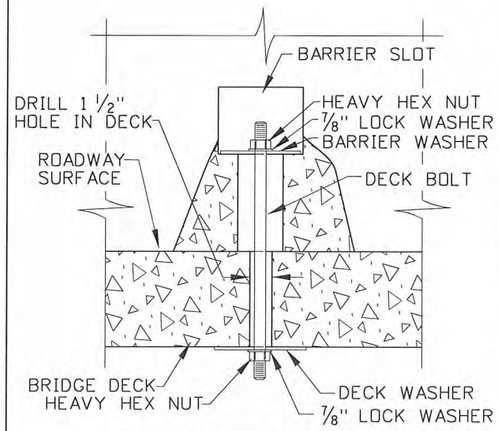

DECK BOLT ANCHORING

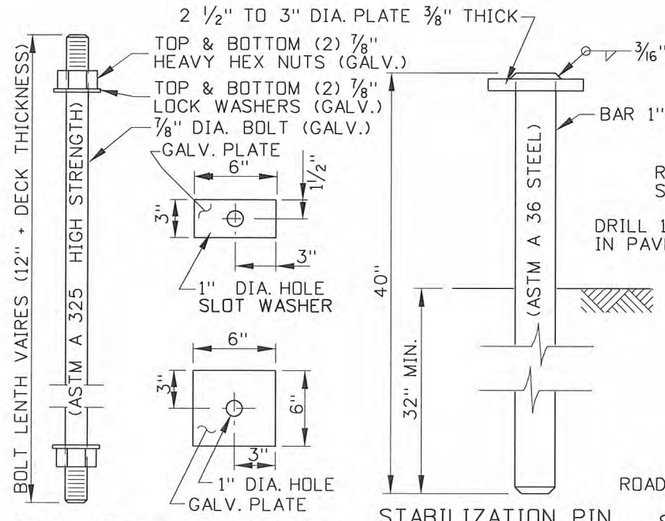

DECK BOLT DECK WASHER

STABILIZATION PIN

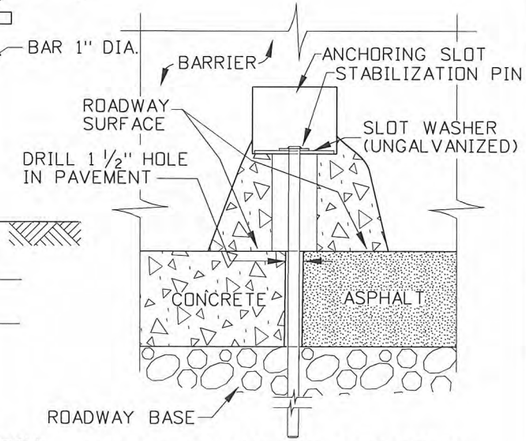

STABILIZATION PIN ANCHORING

ANCHORING ASSEMBLY CON'T.

(SEE NOTE NOS. 1, 3, 5, & 7)

SUB-NOTES

* c ALL METAL REINFORCEMENT BENDS ARE TO BE ACCORDING TO THE LATEST A.C.I. STANDARD PRACTICE AND AASHTO SPECIFICATIONS.
* d DIMENSIONS SHOWN IN THE "METAL REINFORCEMENT TABLE" ARE OUT-TO-OUT (O.to O.) OF BEND POINTS AND/OR END OF BARS UNLESS OTHERWISE NOTED.

METAL REINFORCEMENT TABLE (SEE SUB-NOTES * c & * d)

MARK	LOCATION	BAR SIZE	(NO. BARS)	SKETCH
H-1	HORIZONTAL IN BARRIER TIED INSIDE V-1 BARS	NO. 5	(6)	19'-3"
H-2	CENTERED ABOVE SCUPPERS LONG. & TRANSVERSELY	NO. 5	(6)	6'-6"
H-3	TIED ABOVE H-1 BARS TO SUPPORT H-2, TIED TO V-1	NO. 4	(2)	1'-6"
S-1	HORIZ. IN TOP OF WING WALL & IN FLOOR BACK WALL	NO. 4	(2)	2'-5", 90°, 3 3/8" R, LIFTING HOLE
S-2	HORIZ. AROUND SLOTS BETWEEN V-I'S @ SCUPPERS	NO. 4	(2)	5'-3" BAR W/(4) 1 1/2" R BENDS & MIN. 1'-0" OVERLAP; 1 1/2" R; SLOTS; 1' MIN. OVRLP.; 1" MIN. CLEAR TO BAR; 1'-6 1/2"; * d O.to O.; 8"; * d O.to O.
V-1	VERTICAL IN BARRIER(3) EACH END & (2) AT EACH SCUPPER	NO. 5	(16)	TOTAL LENGTH 4'-9"; 2" R; 12°; 4 7/8"; 2'-1 3/8"; * d O.to O.; * d O.to O.; 10" (+/-)

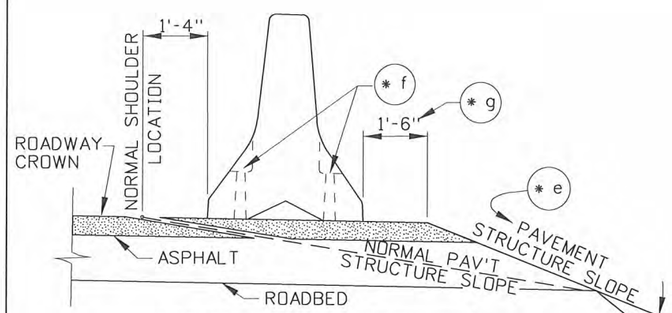

SUB-NOTES CON'T.

* e PAVEMENT STRUCTURE SLOPE VARIABLE BUT NOT STEEPER THAN 2:1
* f NO STABILIZATION PINS (SEE NOTE NOS. 1 & 3)
* g WHEN BARRIER IS ANCHORED THE SHOULDER OFFSET MAY BE 0'-0".

STANDARD INSTALLATION

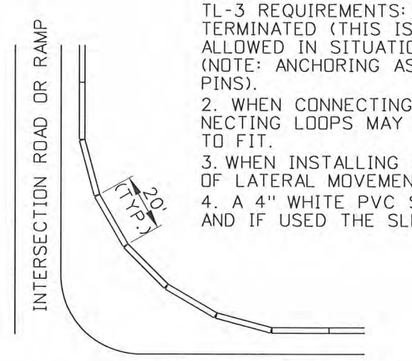

CROSS STREET OR OVERPASS

BARRIER ARRANGED ON A CURVE

MAY BE USED:
1. WHERE POSTED SPEED IS 35 mph OR LESS (SEE NOTE NO. 8).
2. WHERE BARRIER IS OUTSIDE THE CLEAR ZONE.

NOTE: NORMALLY PINS CAN BE USED UNTIL CURVING EXCEEDS 10° BETWEEN UNITS.

CURVED LAYOUT

(SEE NOTE NO. 9)

1. ANCHORING THIS BARRIER IS NOT REQUIRED TO MEET NCHRP 350, TL-3 REQUIREMENTS: HOWEVER, THE BARRIER MUST BE PROPERLY TERMINATED (THIS IS A "STANDARD INSTALLATION"). ANCHORING IS ALLOWED IN SITUATIONS WHERE LATERAL MOVEMENT MUST BE RESTRICTED (NOTE: ANCHORING ASSEMBLIES INCLUDE DECK BOLTS AND STABILIZATION PINS).
2. WHEN CONNECTING 10' TO 20' CONCRETE BARRIER THE EXPOSED CONNECTING LOOPS MAY NEED TO BE BENT (MECHANICALLY, NOT WITH HEAT) TO FIT.
3. WHEN INSTALLING UNANCHORED 20' CONCRETE BARRIER ALLOW FOR 3' OF LATERAL MOVEMENT BEHIND THE BARRIER.
4. A 4" WHITE PVC SLEEVE MAY BE USED TO FORM THE LIFTING HOLE AND IF USED THE SLEEVE IS TO BE LEFT IN PLACE.

TABLE OF MAXIMUM TAPERS FOR CONCRETE BARRIER

DESIGN SPEED (mph)	TAPER
70	20:1
60	17:1
50	14:1
45	13:1
40	11:1
35	10:1

GENERAL NOTES

5. ANCHORED BARRIER UNITS SHALL HAVE FOUR ANCHOR ASSEMBLIES.
6. THE UNIT SHALL BE PRECAST USING CONCRETE CLASS 40B. THE MINIMUM CONCRETE COVER OVER REINFORCEMENT STEEL SHALL BE 2" UNLESS OTHERWISE NOTED.
7. WHEN ANCHORING A BARRIER SYSTEM USE AND DO THE FOLLOWING:
   a. DO NOT DRILL ANCHOR HOLES INTO PRESTRESSED CONCRETE DECK PANELS.
   b. EXPANSION ANCHORS WILL NOT BE PERMITTED FOR USE ON BRIDGE DECKS.
   c. USE ASTM A 325 HIGH STRENGTH GALVANIZED STEEL FOR DECK BOLTS.
   d. A ONE PIECE STABILIZATION PIN WITH A 3" ROUNDED TOP THAT MEETS ASTM A 36 REQUIREMENTS IS ALLOWED.
   e. BRIDGE DECK ANCHOR HOLES SHALL BE DRILLED/CORED SMOOTH AND ROUND.
   f. FOR BARRIER UNITS THAT EXTEND ACROSS BRIDGE EXPANSION JOINTS, DO NOT ANCHOR THE BARRIER (ANCHORED INSTALLATIONS REQUIRE SECURING ALL FOUR ANCHOR SLOTS).
   g. TIGHTEN DECK BOLTS DOWN WELL, BOLT LENGTH SHOULD ALLOW AT LEAST ONE COURSE OF THREADS SHOW OUTSIDE OF THE NUT WHEN TIGHTENED.
   h. DO NOT PROTRUDE THE TOP OF THE DECK BOLT/STABILIZATION PIN HEAD/END BEYOND WHERE THE SLOT EDGE MEETS THE EXTERIOR BARRIER SURFACE.
8. FOR SPEEDS GREATER THAN OR EQUAL TO 35 mph BARRIERS MUST BE PINNED TOGETHER AND CAN NOT EXCEED THE TABLE OF MAXIMUM TAPERS.
9. THE PIN CONNECTED 20' BARRIER DESIGN ALLOWS FOR:
   a. APPROXIMATELY TEN TO ELEVEN PINNED BARRIER UNITS TO COMPLETE A 90° TURN.
   b. CONNECTION JOINTS CAN BEND UP TO 10° BEFORE MEETING RESISTANCE WITH THE ADJACENT BARRIER.
10. NOT TO SCALE.

PROFESSIONAL ENGINEER REGISTERED 6506 10/26/2010 STATE OF IDAHO TED E. MASON

REVISIONS								
NO.	DATE	BY	NO.	DATE	BY	NO.	DATE	BY
1	8-00	MSM	6	6-04	MSM			
2	12-01	MSM	7	10-04	MSM			
3	7-02	MSM	8	9-10	PLR			
4	7-03	MSM						
5	9-03	MSM						

SCALES SHOWN ARE FOR 11" X 17" PRINTS ONLY

CADD FILE NAME: g2a11010.std

DRAWING DATE: NOVEMBER, 1999

IDAHO TRANSPORTATION DEPARTMENT

BOISE IDAHO

ASSISTANT CHIEF ENGINEER (DEVELOPMENT)

CHIEF ENGINEER

STANDARD DRAWING

20' CONCRETE BARRIER

REQUIRES SHEET 1 OF 2

English

STANDARD DRAWING NO. G-2-A-1

SHEET 2 OF 2

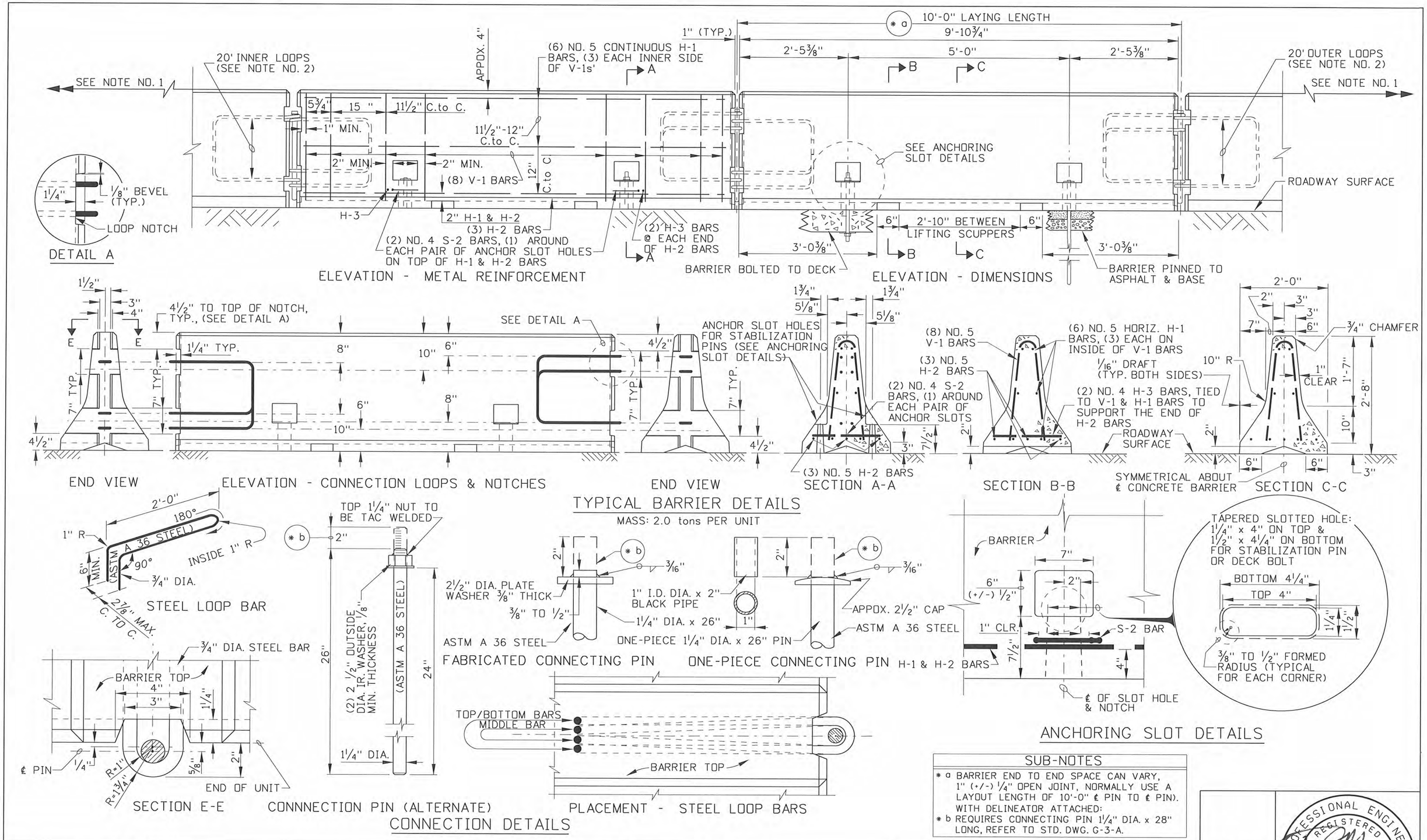

SUB-NOTES

* a BARRIER END TO END SPACE CAN VARY, 1" (+/-) ¼" OPEN JOINT, NORMALLY USE A LAYOUT LENGTH OF 10'-0" ℄ PIN TO ℄ PIN). WITH DELINEATOR ATTACHED:
* b REQUIRES CONNECTING PIN 1¼" DIA. x 28" LONG, REFER TO STD. DWG. G-3-A.

REVISIONS								
NO.	DATE	BY	NO.	DATE	BY	NO.	DATE	BY
1	6-02	MSM						
2	7-03	MSM						
3	6-04	MSM						
4	11-04	MSM						
5	9-10	PLR						

SCALES SHOWN ARE FOR 11" X 17" PRINTS ONLY

CADD FILE NAME: g2a21010.std

DRAWING DATE: APRIL, 2002

IDAHO TRANSPORTATION DEPARTMENT

BOISE IDAHO

ASSISTANT CHIEF ENGINEER (DEVELOPMENT)

CHIEF ENGINEER

STANDARD DRAWING

10' CONCRETE BARRIER

REQUIRES SHEET 2 OF 2

English

STANDARD DRAWING NO.

G-2-A-2

SHEET 1 OF 2

PROFESSIONAL ENGINEER REGISTERED 6506 STATE OF IDAHO TED E. MASON 10/26/2010

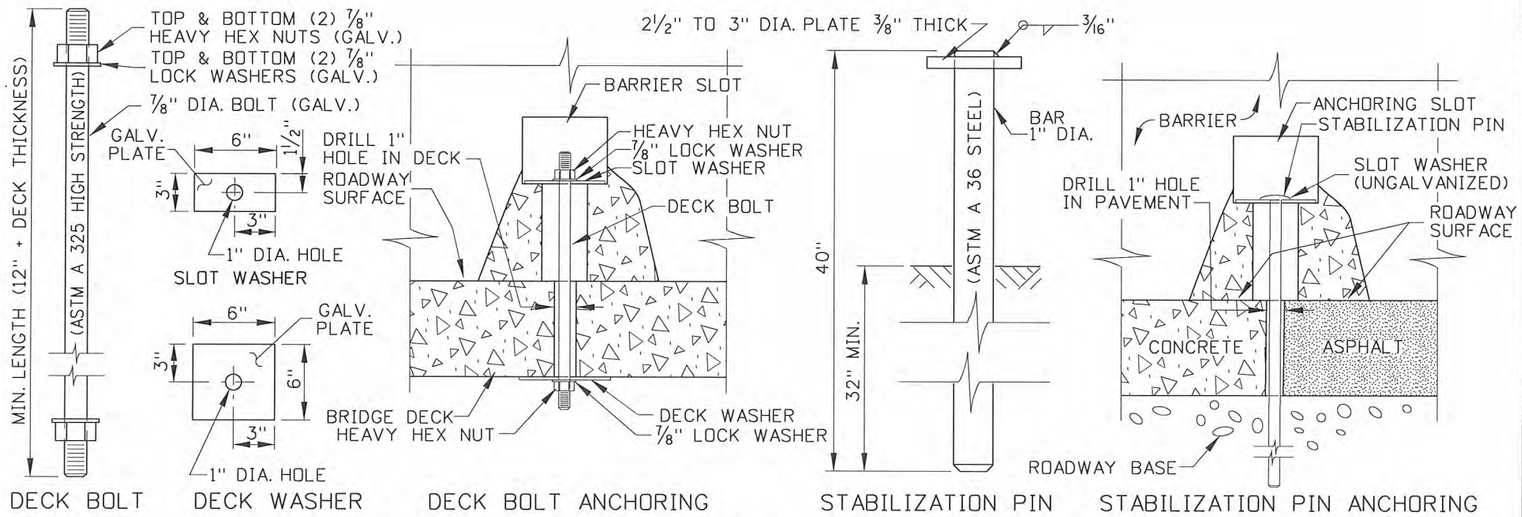

ANCHORING ASSEMBLIES

(SEE NOTE NOS. 1, 3, 4, & 5)

METAL REINFORCEMENT TABLE (SEE SUB-NOTES * c & * d)

MARK	LOCATION	BAR SIZE	(NO.BARS)	SKETCH
H-1	HORIZONTAL IN BARRIER TIED INSIDE V-1 BARS	NO. 5	(6)	9'-6"
H-2	SPACED EVENLY ABOVE SCUPPERS	NO. 5	(3)	6'-6"
H-3	TIED ABOVE H-1 & H-2 BARS @ EACH SIDE OF ANCHOR SLOTS, TIED TO V-1	NO. 4	(2)	1'-6"
V-1	VERTICAL IN BARRIER (3) EACH HALF & (2) CENTERED OVER EACH ANCHORING SLOT	NO. 5	(8)	2" R TOTAL LENGTH 4'-9"; 12°; O.to O. 4 7/8"; 2'-1 3/8"; O.to O. 10" (+/-)
S-2	HORIZ. AROUND ANCHOR SLOTS BETWEEN V-1's	NO. 4	(2)	TOTAL LENGTH 5'-3"; 1 1/2" R; SLOTS; 1' MIN. OVRLP.; 5'-3" BAR W/(4) 1 1/2" R BENDS & MIN. 1'-0" OVERLAP; O.to O. 8"; 1'-6 1/2" O.to O.; 1" MIN. CLEAR TO BAR

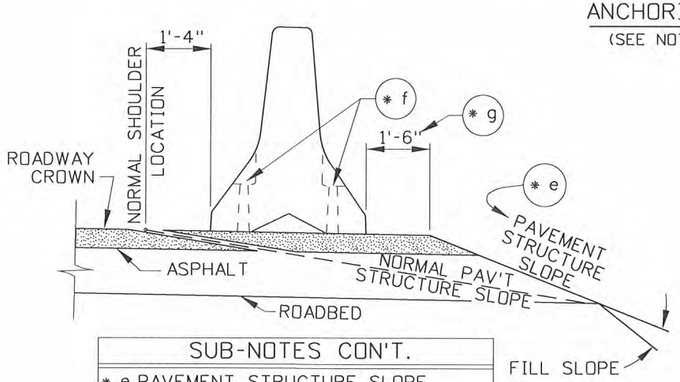

SUB-NOTES CON'T.

* e PAVEMENT STRUCTURE SLOPE VARIABLE BUT NOT STEEPER 2:1.
* f NO STABILIZATION PINS (SEE NOTE NOS. 1 & 3).
* g WHEN BARRIER IS ANCHORED THE SHOULDER OFFSET MAY BE 0'-0".

STANDARD INSTALLATION

TABLE OF MAXIMUM TAPERS FOR CONCRETE BARRIER

DESIGN SPEED (mph)	TAPER
70	20:1
60	17:1
50	14:1
45	13:1
40	11:1
35	10:1

SUB-NOTES

* c ALL METAL REINFORCEMENT BENDS ARE TO BE ACCORDING TO THE LATEST A.C.I. STANDARD PRACTICE AND AASHTO SPECIFICATIONS.
* d DIMENSIONS SHOWN IN THE "METAL REINFORCEMENT TABLE" ARE OUT-TO-OUT (O.to O.) OF BEND POINTS AND/OR END OF BARS UNLESS OTHERWISE NOTED.

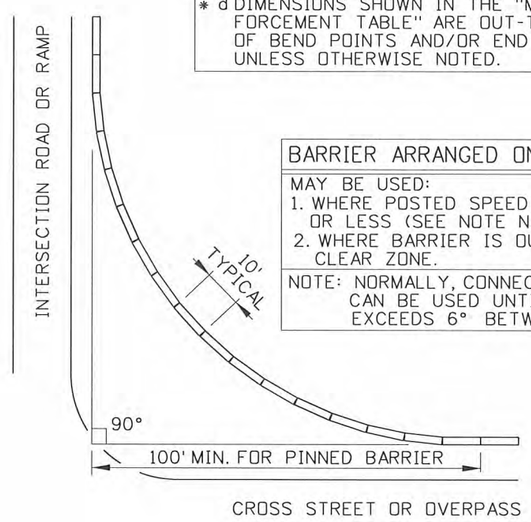

BARRIER ARRANGED ON A CURVE

MAY BE USED:
1. WHERE POSTED SPEED IS 35 mph OR LESS (SEE NOTE NO. 6).
2. WHERE BARRIER IS OUTSIDE THE CLEAR ZONE.

NOTE: NORMALLY, CONNECTING PINS CAN BE USED UNTIL CURVING EXCEEDS 6° BETWEEN UNITS.

CURVED LAYOUT

(SEE NOTE NO. 7)

GENERAL NOTES

1. ANCHORING THIS BARRIER IS NOT REQUIRED TO MEET NCHRP 350, TL-3 REQUIREMENTS: HOWEVER, THE BARRIER MUST BE PROPERLY TERMINATED (THIS IS A "STANDARD INSTALLATION"). ANCHORING IS REQUIRED IN SITUATIONS WHERE LATERAL MOVEMENT MUST BE RESTRICTED (NOTE: ANCHORING ASSEMBLIES INCLUDE DECK BOLTS AND STABILIZATION PINS).
2. WHEN CONNECTING 10' TO 20' CONCRETE BARRIER THE EXPOSED CONNECTING LOOPS MAY NEED TO BE BENT (MECHANICALLY, NOT WITH HEAT) TO FIT.
3. WHEN INSTALLING UNANCHORED 10' CONCRETE BARRIER ALLOW FOR 3' OF LATERAL MOVEMENT BEHIND THE BARRIER.
4. IT IS RECOMMENDED THAT ANCHORED BARRIER UNITS HAVE TWO ANCHOR ASSEMBLIES ON THE TRAFFIC SIDE OF THE BARRIER OR FOUR WHEN THE BARRIER IS EXPOSED TO TRAFFIC ON BOTH SIDES (NOTE: EXCEPT WHEN BARRIER IS LYING ACROSS AN EXPANSION JOINT).
5. WHEN ANCHORING A BARRIER SYSTEM USE AND DO THE FOLLOWING:
   a. DO NOT DRILL ANCHOR HOLES INTO PRESTRESSED CONCRETE DECK PANELS.
   b. EXPANSION ANCHORS WILL NOT BE PERMITTED FOR USE ON BRIDGE DECKS.
   c. USE ASTM A 325 HIGH STRENGTH GALVANIZED STEEL FOR DECK BOLTS AND NUTS.
   d. ASTM A 36 STEEL SHALL BE USED FOR CONNECTION LOOPS, THE CONNECTION PIN, AND THE STABILIZATION PIN. A ONE PIECE STABILIZATION PIN WITH A 3" ROUNDED TOP THAT MEETS ASTM A 36 REQUIREMENTS IS ALLOWED.
   e. BRIDGE DECK ANCHOR HOLES SHALL BE DRILLED/CORED SMOOTH AND ROUND.
   f. WHEN A BARRIER UNIT EXTENDS ACROSS AN EXPANSION/CONTRACTION JOINT, ANCHOR ONLY ONE SIDE OF THE UNIT. INSTALL TWO ANCHOR BOLTS ON FARTHEST END FROM THE JOINT (NORMAL INSTALLATION REQUIRES TWO BOLTS ON THE TRAFFIC SIDE).
   g. TIGHTEN DECK BOLTS DOWN WELL, TIGHTEN NUTS SO AT LEAST ONE COURSE OF THREADS SHOW OUTSIDE OF THE NUT.
   h. DO NOT PROTRUDE THE TOP OF THE DECK BOLT/STABILIZATION PIN HEAD OR END BEYOND WHERE THE SLOT EDGE MEETS THE EXTERIOR BARRIER SURFACE.
6. FOR SPEEDS GREATER THAN OR EQUAL TO 35 mph BARRIERS MUST BE PINNED TOGETHER AND CAN NOT EXCEED THE TABLE OF MAXIMUM TAPERS.
7. THE DESIGN FOR PIN CONNECTED 10' BARRIER ALLOWS FOR:
   a. APPROXIMATELY FIFTEEN TO SIXTEEN PINNED BARRIER UNITS TO COMPLETE A 90° TURN.
   b. BARRIER JOINTS CAN BEND APPROX. 6° BEFORE MEETING RESISTANCE.
8. THE UNIT SHALL BE PRECAST USING CONCRETE CLASS 40B. THE MIN. CONCRETE COVER OVER REINFORCEMENT STEEL SHALL BE 2" UNLESS OTHERWISE NOTED.
9. NOT TO SCALE.

REVISIONS

NO.	DATE	BY	NO.	DATE	BY	NO.	DATE	BY
1	6-02	MSM						
2	7-03	MSM						
3	6-04	MSM						
4	11-04	MSM						
5	9-10	PLR						

SCALES SHOWN ARE FOR 11" X 17" PRINTS ONLY

CADD FILE NAME: g2o21010.std

DRAWING DATE: APRIL, 2002

IDAHO TRANSPORTATION DEPARTMENT

BOISE IDAHO

ASSISTANT CHIEF ENGINEER (DEVELOPMENT)

CHIEF ENGINEER

STANDARD DRAWING

10' CONCRETE BARRIER

REQUIRES SHEET 1 OF 2

English

STANDARD DRAWING NO. G-2-A-2

SHEET 2 OF 2

PROFESSIONAL ENGINEER REGISTERED 6506 10/26/2010 STATE OF IDAHO TED E. MASON

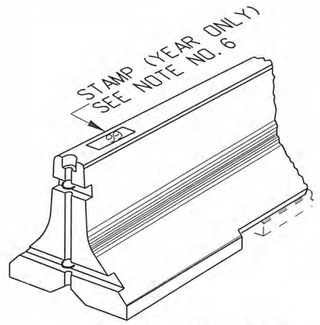

ISOMETRIC VIEW

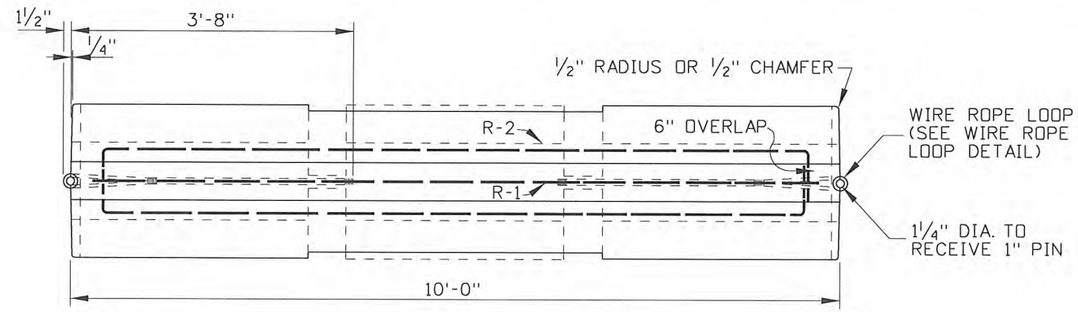

PLAN

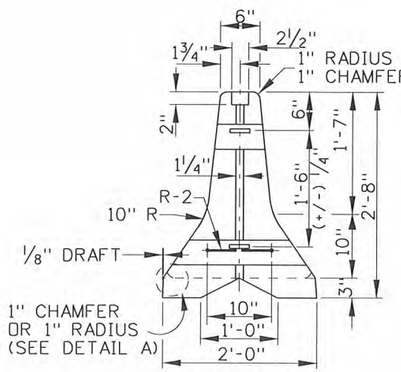

END VIEW

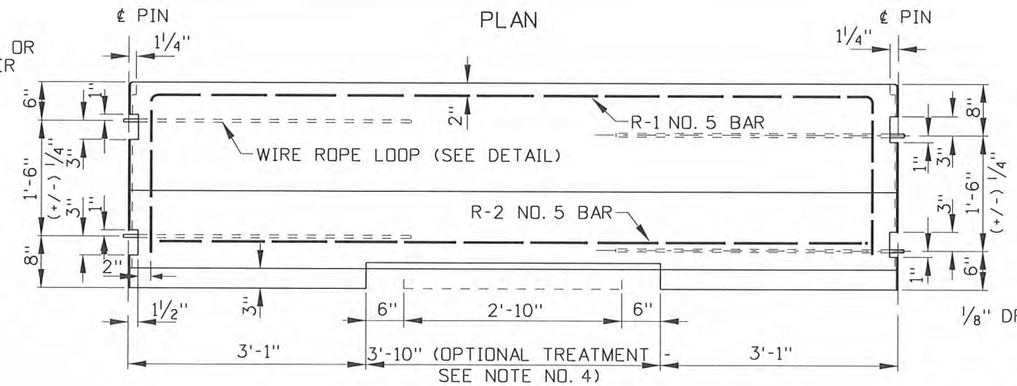

ELEVATION

CONCRETE BARRIER DETAILS

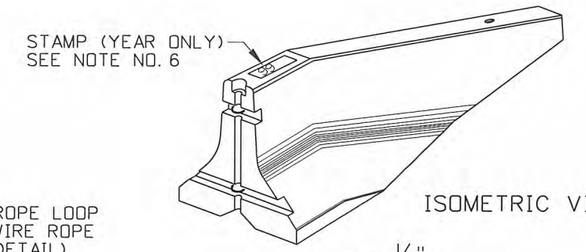

ISOMETRIC VIEW

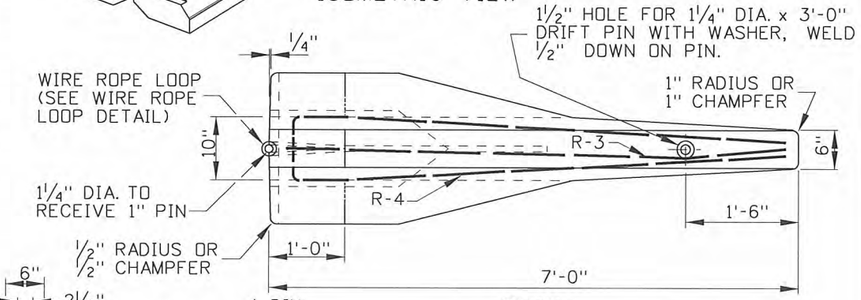

PLAN

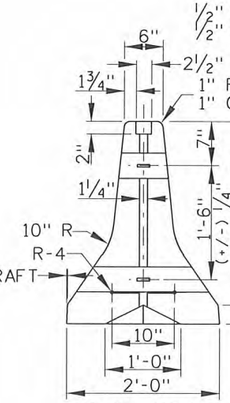

END VIEW

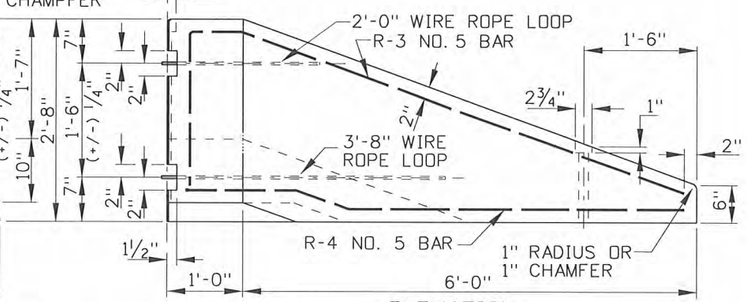

ELEVATION

TYPE A TERMINAL DETAILS

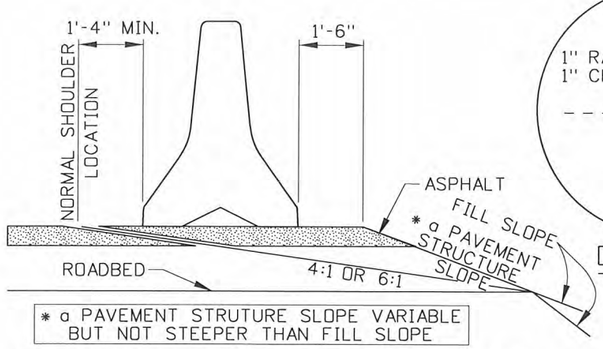

LOCATION OF BARRIER AT SHOULDER

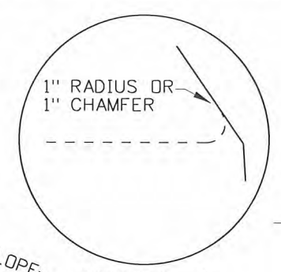

DETAIL A

TABLE OF MAXIMUM TAPERS FOR CONCRETE BARRIER	
DESIGN SPEED (MPH)	TAPER
70	20:1
60	17:1
50	14:1
40	11:1

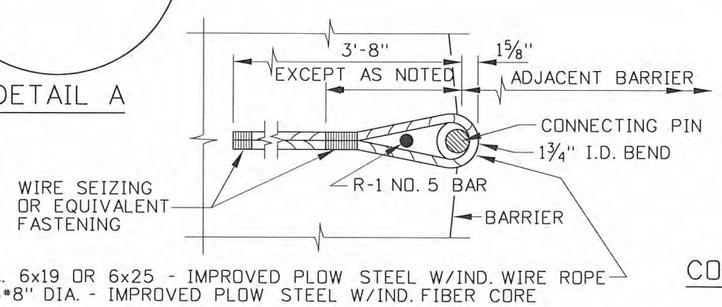

WIRE ROPE DETAIL

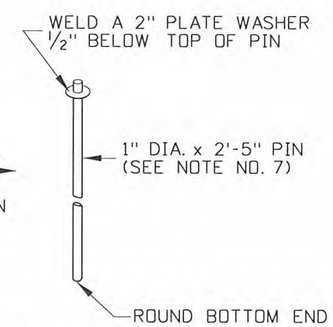

CONNECTING PIN

NOTES

1. THE 10' CONCRETE BARRIER AND TYPE A TERMINAL ARE LIMITED USE ITEMS AND DO NOT MEET NCHRP 350 TL-3 REQUIREMENTS.
2. THE UNIT SHALL BE PRECAST USING CONCRETE CLASS 30. THE MINIMUM CONCRETE COVER OVER REINFORCEMENT STEEL SHALL BE 2".
3. TERMINAL SECTION TYPE A IS A RESTRICTED USE ITEM. WHEN THE BARRIER IS FLARED USE THE "TABLE OF MAXIMUM TAPERS FOR CONCRETE BARRIER".
4. WHEN PREFERRED, THE OPEN BOTTOM PORTION OF THE BARRIER NOTED IN THE ELEVATION VIEW MAY BE FILLED EXCEPT FOR TWO 6" SLOTS WHICH ARE TO BE RETAINED.
5. ALL SECTIONS INCLUDING TERMINALS SHALL BE CLEARLY AND PERMANENTLY STAMPED TO IDENTIFY THE MANUFACTURING COMPANY'S NAME AND THE DATE (YEAR) OF MANUFACTURE. WHEN THE COMPANY HAS MORE THAN ONE PLANT THE STAMP SHALL INDICATE THE SPECIFIC LOCATION OF MANUFACTURE.
6. THE YEAR OF MANUFACTURER SHALL BE SET IN THE TOP OF EACH SECTION. THE STAMP SHALL BE 2" BLOCK LETTERING, ¼" WIDE AND ¼" DEEP.
7. THE STEEL CONNECTOR PIN SHALL CONFORM TO ASTM A 36 REQUIREMENTS.
8. NOT TO SCALE.

REVISIONS								
NO.	DATE	BY	NO.	DATE	BY	NO.	DATE	BY
1	1-86	GB	6	12-92	MSM	11	9-10	PLR
2	8-86	GB	7	9-93	MSM			
3	6-87	GB	8	2-96	MSM			
4	4-89	GB	9	1-00	MSM			
5	1-91	GB	10	12-04	MSM			

SCALES SHOWN ARE FOR 11" X 17" PRINTS ONLY

CADD FILE NAME: g2a_1010.std

DRAWING DATE: NOVEMBER, 1974

IDAHO TRANSPORTATION DEPARTMENT

BOISE IDAHO

ASSISTANT CHIEF ENGINEER (DEVELOPMENT)

CHIEF ENGINEER

STANDARD DRAWING

CONCRETE BARRIER & TERMINAL TYPE A

English

STANDARD DRAWING NO. G-2-A

SHEET 1 OF 1

PROFESSIONAL ENGINEER REGISTERED 6506 STATE OF IDAHO TED E. MASON 10/26/2010

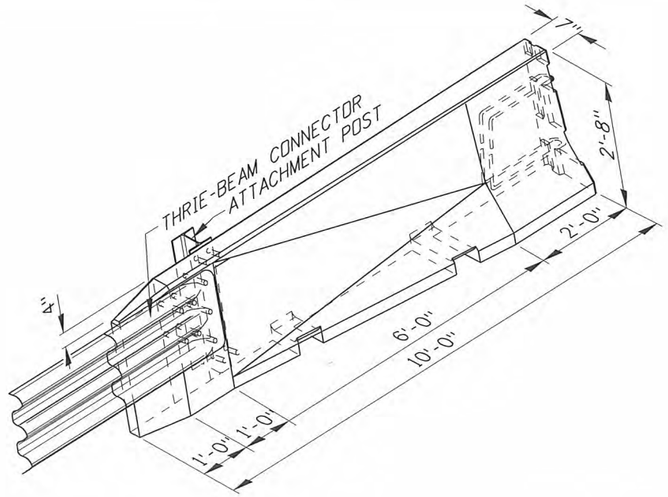

PERSPECTIVE - SHOWING FRONT OF CONNECTOR

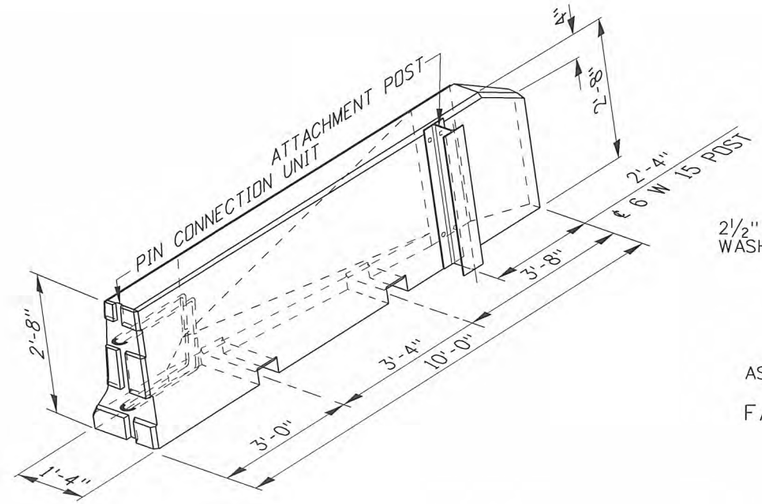

PERSPECTIVE - SHOWING BACK OF CONNECTOR

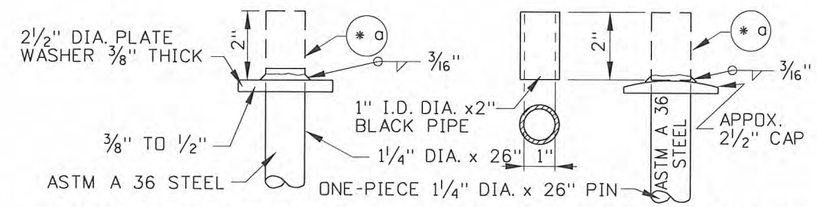

FABRICATED CONNECTING PIN ONE-PIECE CONNECTING PIN

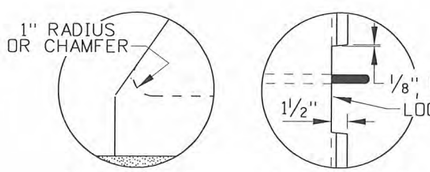

DETAIL A

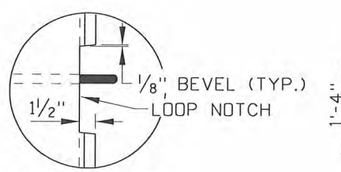

DETAIL B

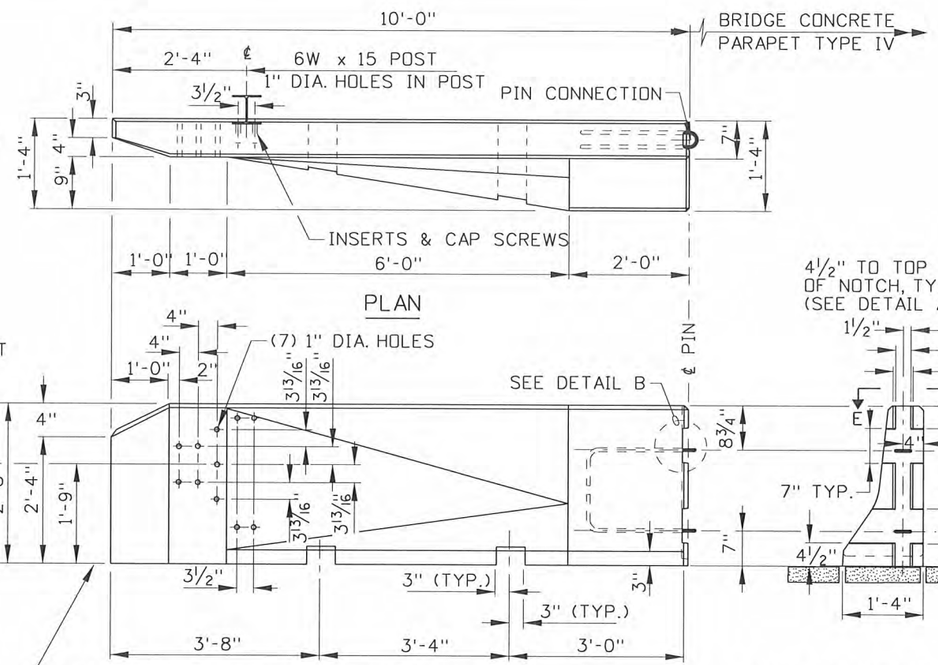

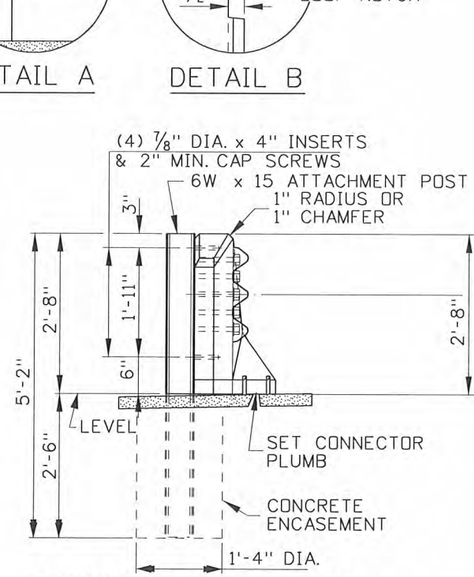

APPROACHING END VIEW

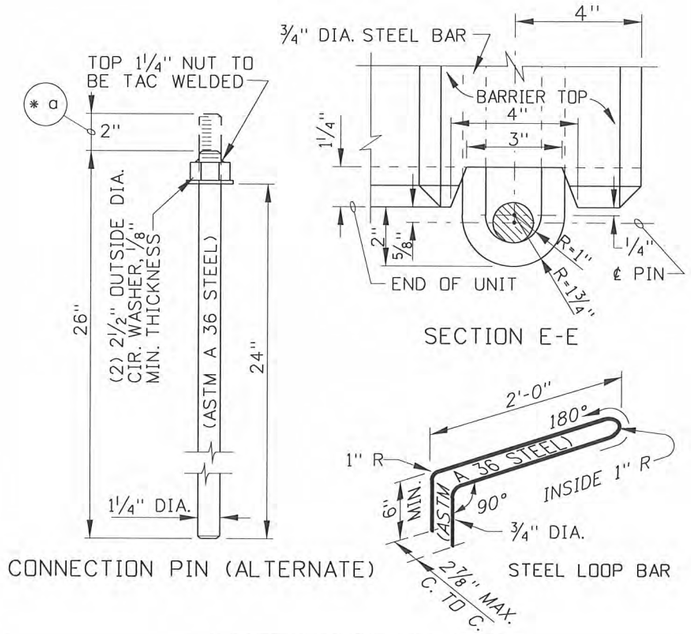

CONNECTION DETAILS

REVISIONS								
NO.	DATE	BY	NO.	DATE	BY	NO.	DATE	BY
1	7-78		6	1-91	GB	11	12-02	MSM
2	6-80		7	12-92	MSM	12	12-04	MSM
3	1-82		8	4-94	MSM	13	10-10	PLR
4	5-82		9	2-96	MSM			
5	7-88	GB	10	5-99	MSM			

SCALES SHOWN ARE FOR 11" X 17" PRINTS ONLY

CADD FILE NAME: g2c_1010.std

DRAWING DATE: AUGUST, 1977

IDAHO TRANSPORTATION DEPARTMENT

BOISE IDAHO

ASSISTANT CHIEF ENGINEER (DEVELOPMENT)

CHIEF ENGINEER

STANDARD DRAWING

CONCRETE PARAPET TO THRIE BEAM CONNECTOR

REQUIRES SHEET 2 OF 2 & STD. DWG. G-1-E

English

STANDARD DRAWING NO.

G-2-C

SHEET 1 OF 2

PROFESSIONAL ENGINEER REGISTERED 6506 10/26/2010 STATE OF IDAHO TED E. MASON

(* b & * c) G-2-C METAL REINFORCEMENT TABLE

MARK	LOCATION	BAR SIZE	(NO. BARS)	BAR LENGTH	SKETCH
H-1	HORIZONTAL IN BARRIER TIED TO INSIDE BACK OF V-3a, V-3b, & V-3c BARS	NO. 5	(3)	9'-6"	9'-6"
H-2	HORIZONTAL IN BARRIER TIED TO INSIDE FRONT OF V-3a, V-3b, & V-3c BARS	NO. 5	(3)	8'-9"	8'-9"
V-1	TIED UNDER V-3a THRU V-3b & SET BETWEEN CONN. LOOPS, TOP TIED ON V-2	NO. 5	(1)	13'-0"	2" R, 8'-4", 2" R, 2'-2", 2'-0", 8'-9" (+/-)
V-2	VERT. IN BARRIER END, TIED TO V-1, & TO TOP OF LOOP V-3c	NO. 5	(1)	6'-0"	2" R, 9", 1'-3", 160°, 110°, 1'-9", 2'-4", 2" R, 1'-9"
V-3a	(VERTICAL IN BARRIER (3) IN TRAILING END, (2) CENTERED OVER TRAILING ANCHORING SLOT	NO. 5	(3)	4'-9"	2" R, 2'-0", 6°, 4", 2'-0½", 6" (+/-) ½"
V-3b	VERTICAL IN BARRIER (2) CENTERED OVER APPROACHING ANCHORING SLOT	NO. 5	(2)	4'-7"	2" R, 2'-0", 4"
V-3c	VERTICAL IN BARRIER AT APPROACHING END OF BARRIER	NO. 5	(1)	4'-4"	2" R, 1'-10¾", 4"
L-1	HORIZ. IN BARRIER BASE, FRONT END TIED TO V-2 BOTTOM	NO. 5	(1)	20'-0"	6'-0", 2" R, 2" R, 7° to 7¼° 9" MIN. OVERLAP, 4" R, 4'-6", 10¾", 1'-5", 2" R

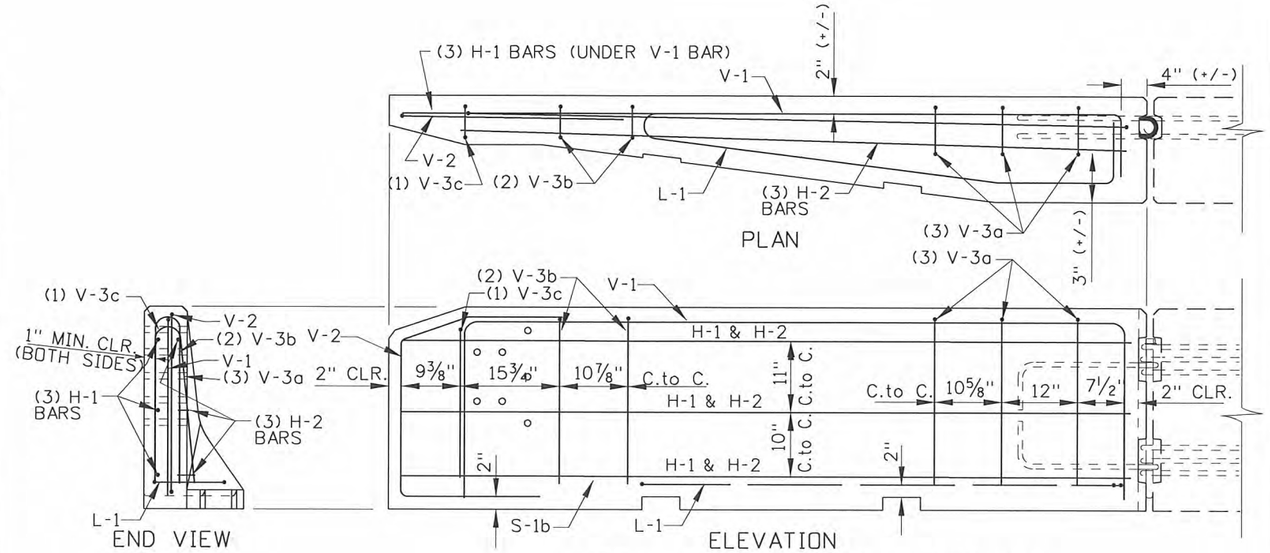

METAL REINFORCEMENT DETAILS

SUB-NOTES

* a WITH DELINEATOR ATTACHED: REQUIRES CONNECTING PIN 1¼" DIA. x 28" LONG, REFER TO STD. DWG. G-3-A.
* b ALL METAL REINFORCEMENT BENDS ARE TO BE ACCORDING TO THE LATEST A.C.I. STANDARD PRACTICE AND AASHTO SPECIFICATIONS.
* c DIMENSIONS SHOWN IN THE "METAL REINFORCEMENT TABLE" ARE OUT-TO-OUT (O.to O.) OF BEND POINTS AND/OR END OF BARS UNLESS OTHERWISE NOTED.

NOTES

1. CONNECTORS SHALL BE FURNISHED AS SHOWN OR OPPOSITE HAND CONFIGURATION AS REQUIRED BY THE SITE.

2. THE CAP SCREWS SHALL BE ASTM A 325 STEEL. INSERTS AND CAP SCREWS SHALL BE GALVANIZED.

3. THE PREFERRED CONSTRUCTION SEQUENCE IS AS FOLLOWS:

   A. FINISH SHOULDER SURFACE INCLUDING PAVING IF REQUIRED.
   B. EXCAVATE HOLE FOR POST ENCASEMENT.
   C. SET CONNECTOR.
   D. BOLT ON 6W x 15 ATTACHMENT POST.
   E. PLACE CONCRETE ENCASEMENT AND FINISH EXPOSED SURFACE.

4. THE UNIT SHALL BE PRECAST USING CONCRETE CLASS 40B. THE MINIMUM CONCRETE COVER OVER REINFORCEMENT STEEL SHALL BE 2" UNLESS OTHERWISE NOTED.

5. THE LATERAL MOVEMENT OF THIS BARRIER TRANSITION SECTION IS RESTRICTED AND SHALL BE ANCHORED WITH A STEEL POST AND CONNECTED TO THE BRIDGE PARAPET

6. WHEN THE ATTACHING THE CONNECTOR TO 10' OR 20' CONCRETE BARRIER OR EXISTING BRIDGE PARAPET THE EXPOSED CONNECTING LOOPS MAY NEED TO BE BENT (MECHANICALLY NOT WITH HEAT) TO FIT.

7. ALL THRIE-BEAM METAL GUARDRAIL, ATTACHMENT POST, AND ASSESSORIES SHALL CONFORM TO THE SPECIFICATIONS CONTAINED WITHIN THE AASHTO "GUIDE TO STANDARDIZED HIGHWAY BARRIER HARDWARE".

8. THE STEEL CONNECTOR PIN SHALL CONFORM TO ASTM A 36 REQUIREMENTS.

9. NOT TO SCALE.

REVISIONS

NO.	DATE	BY	NO.	DATE	BY	NO.	DATE	BY
1	7-78		6	1-91	GB	11	12-02	MSM
2	6-80		7	12-92	MSM	12	12-04	MSM
3	1-82		8	4-94	MSM	13	10-10	PLR
4	5-82		9	2-96	MSM			
5	7-88	GB	10	5-99	MSM			

SCALES SHOWN ARE FOR 11" X 17" PRINTS ONLY

CADD FILE NAME: g2c_1010.std

DRAWING DATE: AUGUST, 1977

IDAHO TRANSPORTATION DEPARTMENT

BOISE IDAHO

ASSISTANT CHIEF ENGINEER (DEVELOPMENT)

CHIEF ENGINEER

STANDARD DRAWING

CONCRETE PARAPET TO THRIE BEAM CONNECTOR

REQUIRES SHEET 2 OF 2 & STD. DWG. G-1-E

English

STANDARD DRAWING NO.

G-2-C

SHEET 2 OF 2

PROFESSIONAL ENGINEER REGISTERED 6506 STATE OF IDAHO TED E. MASON 10/26/2010

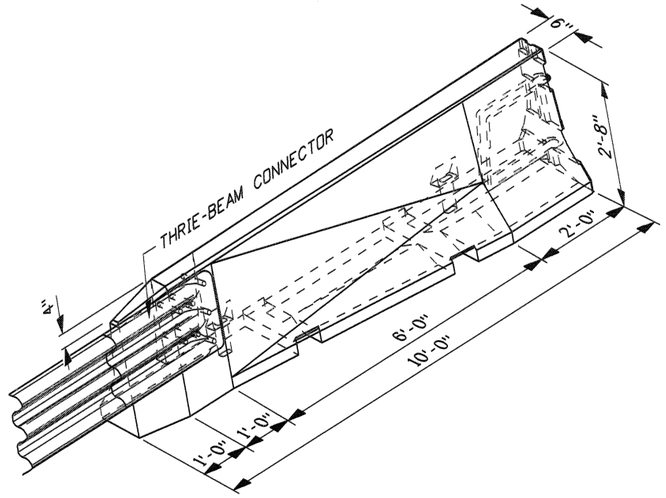

PERSPECTIVE - SHOWING FRONT OF CONNECTOR

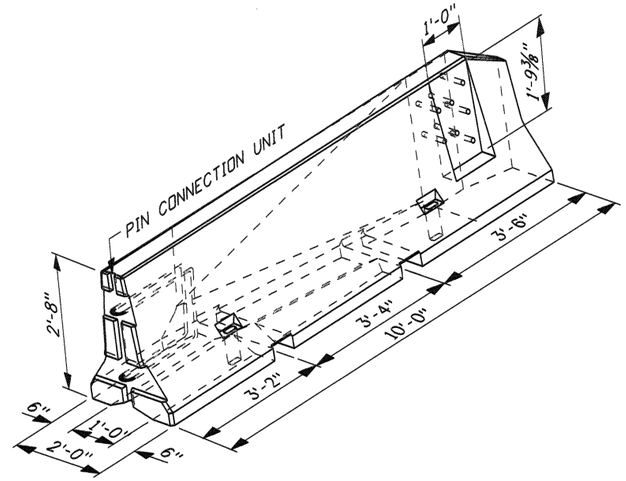

PERSPECTIVE - SHOWING BACK OF CONNECTOR

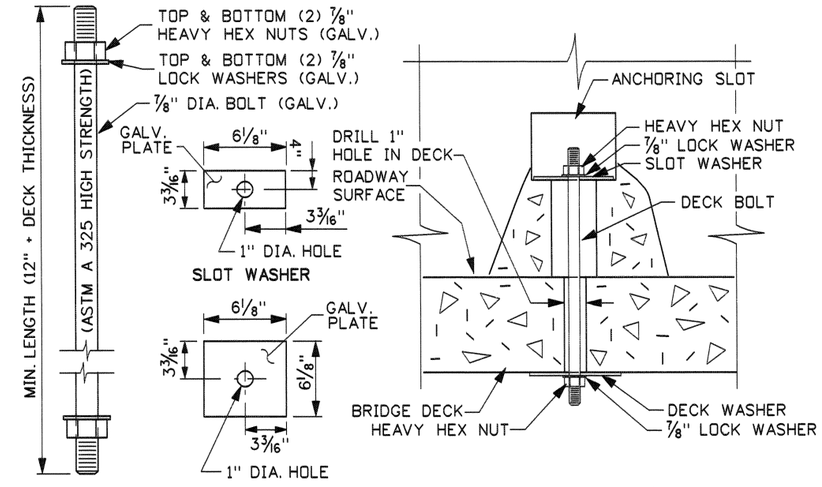

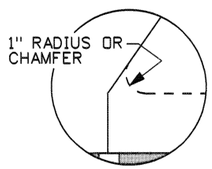

DETAIL A

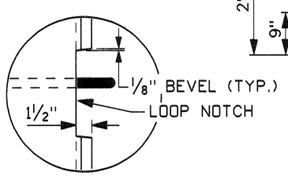

DETAIL B

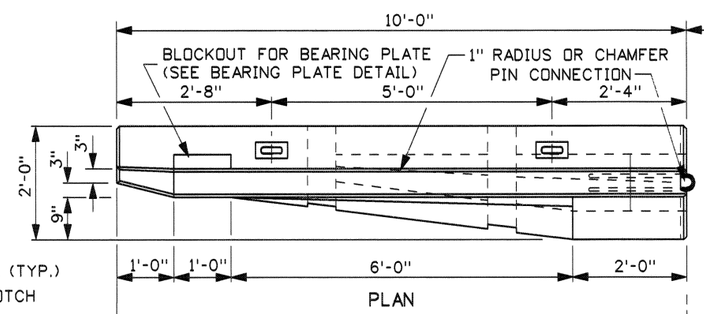

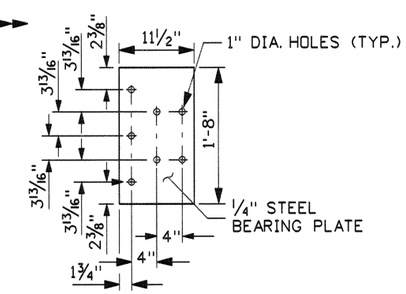

BEARING PLATE DETAIL

(SEE NOTE NO. 6)

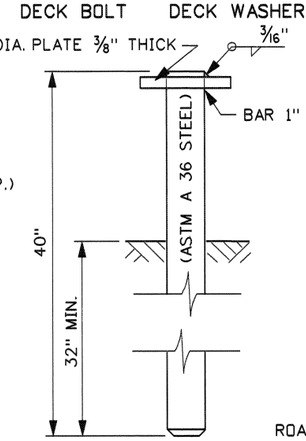

STABILIZATION PIN

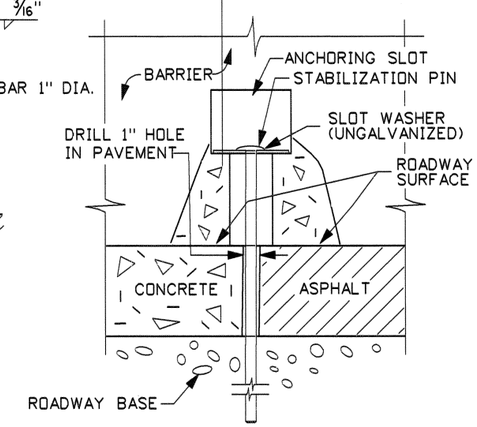

STABILIZATION PIN ANCHORING

ANCHORING ASSEMBLIES

(SEE NOTE NO. 3)

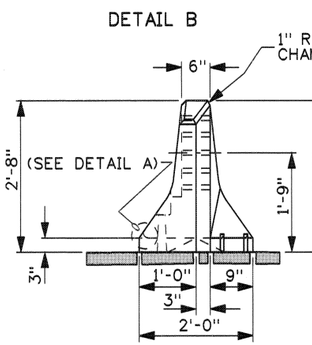

FRONT END VIEW

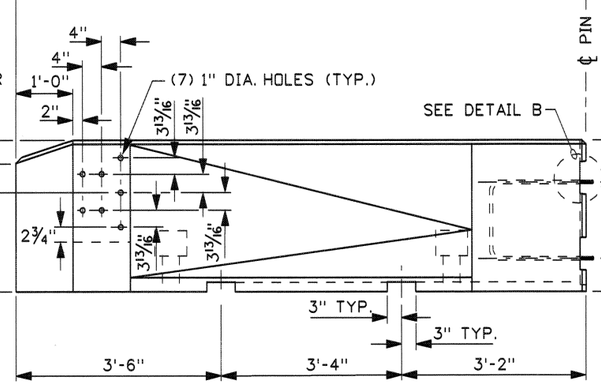

ELEVATION

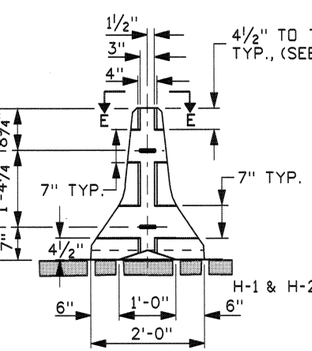

CONNECTION END VIEW

BARRIER DETAILS

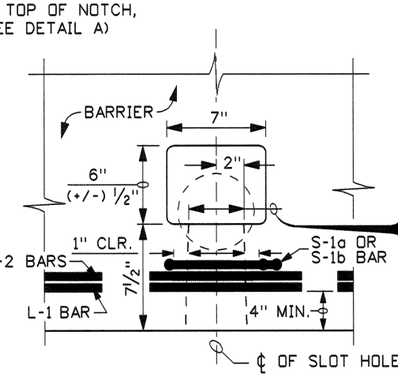

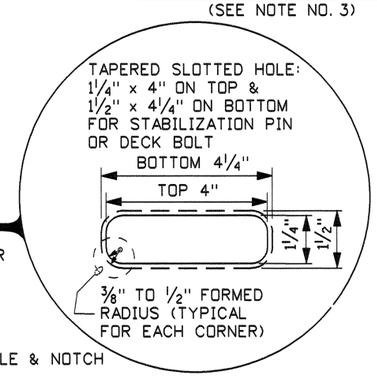

ANCHORING SLOT DETAILS

REVISIONS								
NO.	DATE	BY	NO.	DATE	BY	NO.	DATE	BY
1	6-80		6	12-94	MSM	11	11-04	MSM
2	5-82		7	2-96	MSM			
3	7-88	GB	8	5-99	MSM			
4	1-91	GB	9	10-02	MSM			
5	12-92	MSM	10	4-04	MSM			

SCALES SHOWN ARE FOR 11" X 17" PRINTS ONLY

CADD FILE NAME g2d_1104.std

DRWG. ORIG. DATE: AUGUST, 1977

IDAHO TRANSPORTATION DEPARTMENT

BOISE IDAHO

Steven C. Hakenson
ASSISTANT CHIEF ENGINEER (DEVELOPMENT)

CHIEF ENGINEER

STANDARD DRAWING

CONCRETE BARRIER TO THRIE BEAM GUARDRAIL CONNECTOR

REQUIRES SHEET 2 OF 2 & STD. DWGS. G-1-E & G-2-A-1 OR G-2-A-2

English

STANDARD DRWG. NO.

G-2-D

SHEET 1 OF 2

PROFESSIONAL ENGINEER REGISTERED 2240 11/5/04 STATE OF IDAHO MILFORD L. MILLER

Milford L. Miller

(* b & * c) G-2-D METAL REINFORCEMENT TABLE

MARK	LOCATION	BAR SIZE	(NO. BARS)	BAR LENGTH	SKETCH
H-1	HORIZ. IN BARRIER TIED TO INSIDE BACK OF V-3a, V-3b, & V-3c BARS	NO. 5	(3)	9'-6"	9'-6"
H-2	HORIZ. IN BARRIER TIED TO INSIDE FRONT OF V-3a, V-3b, & V-3c BARS	NO. 5	(2)	8'-9"	8'-9"
V-1	TIED UNDER V-3a THRU V-3b & SET BETWEEN CONN. LOOPS, TOP TIED ON V-2	NO. 5	(1)	13'-0"	2" R; 8'-4"; 2" R; 2'-2"; 2'-0"; 8'-9" (+/-) O.to O.
V-2	VERT. IN BARRIER END, TIED TO V-1, & TO TOP OF LOOP V-3c	NO. 5	(1)	6'-0"	2" R; 9"; 1'-3"; 160°; 110°; 1'-9"; 2'-4" O.to O.; 1'-9"; 2" R
V-3a	(VERT. IN BARRIER (3) IN TRAILING END, (2) CENTERED OVER TRAILING ANCHORING SLOT	NO. 5	(3)	4'-8"	2" R; 2'-0½"; 12°; 2'-0½"; 4" O.to O.; 9" (+/-) ½" O.to O.
V-3b	VERT. IN BARRIER (2) CENTERED OVER APPROACHING ANCHORING SLOT	NO. 5	(2)	4'-7"	2" R; 2'-0"; 6°; 2'-0½"; 4" O.to O.; 6 (+/-) ½" O.to O.
V-3c	VERT. IN BARRIER AT APPROACHING END OF BARRIER	NO. 5	(1)	4'-4"	2" R; 1'-10¾"; 6°; 1'-10½"; 4" O.to O.; 6 (+/-) ½" O.to O.
L-1	HORIZ. IN BARRIER BASE, FRONT END TIED TO V-2 BOTTOM	NO. 5	(1)	20'-0"	8'-0"; 2" R; 4" R; 7° TO 7¼°; 1' MIN. OVERLAP; 4" R; 1'-5"; 6'-7"; 1'-3½"; 2" R
S-1a	HORIZ. AROUND TRAILING ANCHOR SLOT	NO. 4	(1)	5'-3"	1½" R; SLOT; 1' MIN. OVRLP; 1" MIN. CLEAR TO BAR; 5'-3" BAR W/(4) 1½" R BENDS & MIN. 1'-0" OVERLAP; 8" O.to O.; 1'-6½" O.to O.
S-1b	HORIZ. AROUND APPROACHING ANCHOR SLOT	NO. 4	(1)	4'-5"	1½" R; SLOT; 8" MIN OVRLP.; 1" MIN. CLEAR TO BAR; 4'-5" BAR W/(4) 1½" R BENDS & MIN. 8" OVERLAP; 8" O.to O.; 11" O.to O.

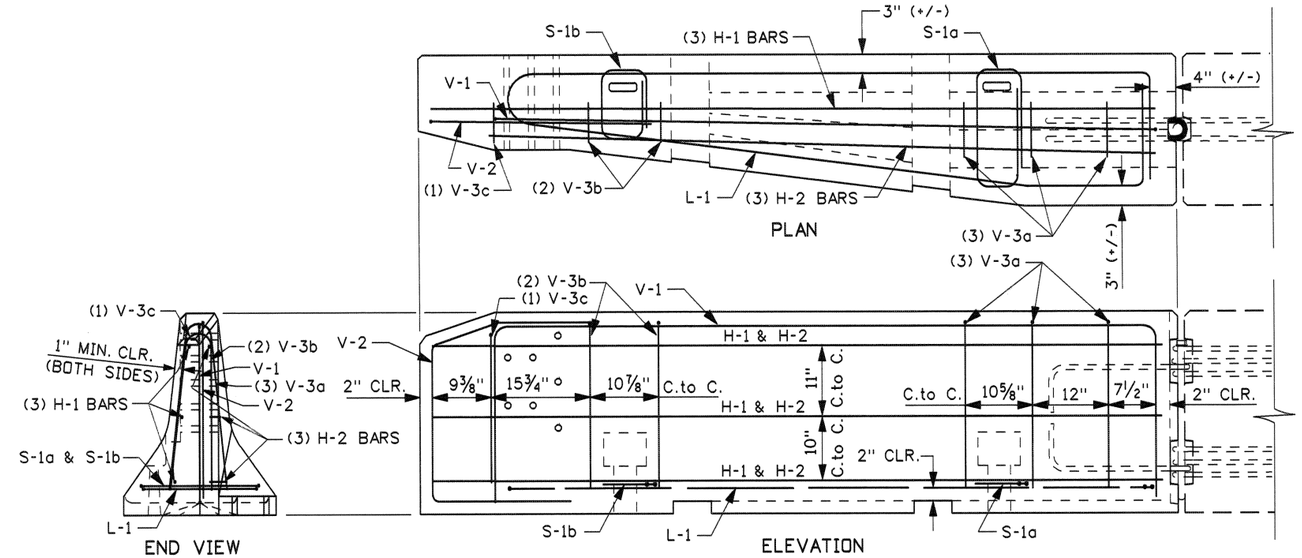

METAL REINFORCEMENT DETAILS

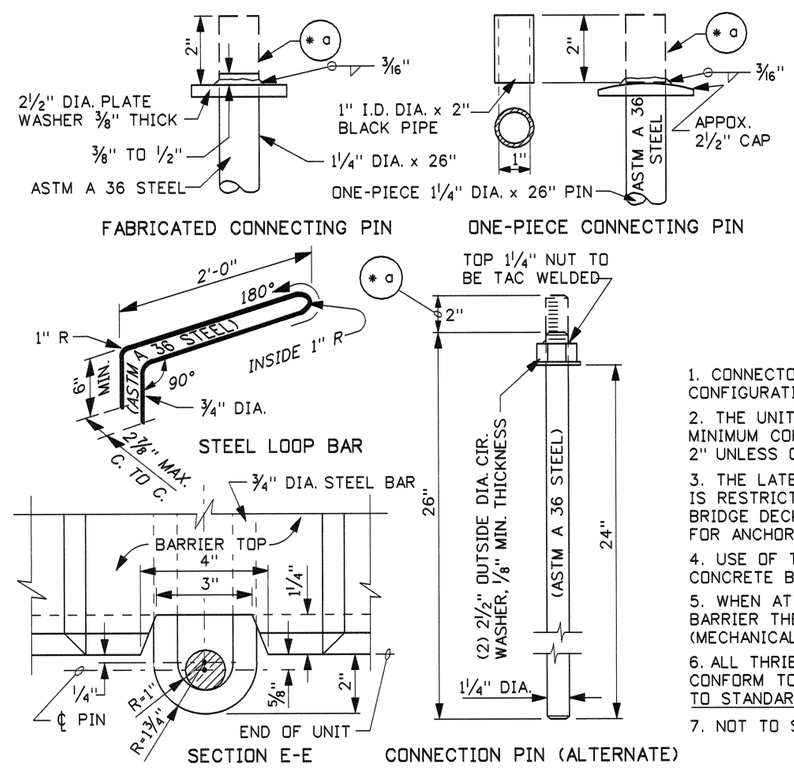

CONNECTION DETAILS

SUB-NOTES

* a WITH DELINEATOR ATTACHED: REQUIRES CONNECTING PIN 1¼" DIA. x 28" LONG, REFER TO STD. DWG. G-3-A.
* b ALL METAL REINFORCEMENT BENDS ARE TO BE ACCORDING TO THE LATEST A.C.I. STANDARD PRACTICE AND AASHTO SPECIFICATIONS.
* c DIMENSIONS SHOWN IN THE "METAL REINFORCEMENT TABLE" ARE OUT-TO-OUT (O.to O.) OF BEND POINTS AND/OR END OF BARS UNLESS OTHERWISE NOTED.

NOTES

1. CONNECTORS SHALL BE FURNISHED AS SHOWN OR OPPOSITE HAND CONFIGURATION AS REQUIRED BY THE SITE.
2. THE UNIT SHALL BE PRECAST USING CONCRETE CLASS 40B. THE MINIMUM CONCRETE COVER OVER REINFORCEMENT STEEL SHALL BE 2" UNLESS OTHERWISE NOTED.
3. THE LATERAL MOVEMENT OF THIS BARRIER TRANSITION SECTION IS RESTRICTED AND SHALL BE ANCHORED TO ROADWAY SURFACE OR BRIDGE DECK. REFER TO STANDARD DRAWING G-2-A-1 OR G-2-A-2 FOR ANCHORING NOTES AND DETAILS.
4. USE OF THIS CONNECTOR IS ALLOWED WITH ITD'S 10' AND 20' CONCRETE BARRIER.
5. WHEN ATTACHING THE CONNECTOR TO 10' OR 20' CONCRETE BARRIER THE EXPOSED CONNECTING LOOPS MAY NEED TO BE BENT (MECHANICALLY NOT WITH HEAT) TO FIT.
6. ALL THRIE-BEAM METAL GUARDRAIL AND ACCESSORIES SHALL CONFORM TO THE SPECIFICATIONS CONTAINED WITHIN THE "GUIDE TO STANDARDIZED HIGHWAY BARRIER HARDWARE".
7. NOT TO SCALE.

PROFESSIONAL ENGINEER REGISTERED 2240 11/5/04 STATE OF IDAHO MILFORD L. MILLER

REVISIONS								
NO.	DATE	BY	NO.	DATE	BY	NO.	DATE	BY
1	6-80		6	12-94	MSM	11	11-04	MSM
2	5-82		7	2-96	MSM			
3	7-88	GB	8	5-99	MSM			
4	1-91	GB	9	10-02	MSM			
5	12-92	MSM	10	4-04	MSM			

SCALES SHOWN ARE FOR 11" X 17" PRINTS ONLY

CADD FILE NAME g2d_1104.std

DRWG. ORIG. DATE: AUGUST, 1977

IDAHO TRANSPORTATION DEPARTMENT

BOISE IDAHO

ASSISTANT CHIEF ENGINEER (DEVELOPMENT)

CHIEF ENGINEER

STANDARD DRAWING

CONCRETE BARRIER TO THRIE BEAM GUARDRAIL CONNECTOR

REQUIRES SHEET 1 OF 2 & STD. DWGS. G-1-E & G-2-A-1 OR G-2-A-2

English

STANDARD DRWG. NO.

G-2-D

SHEET 2 OF 2

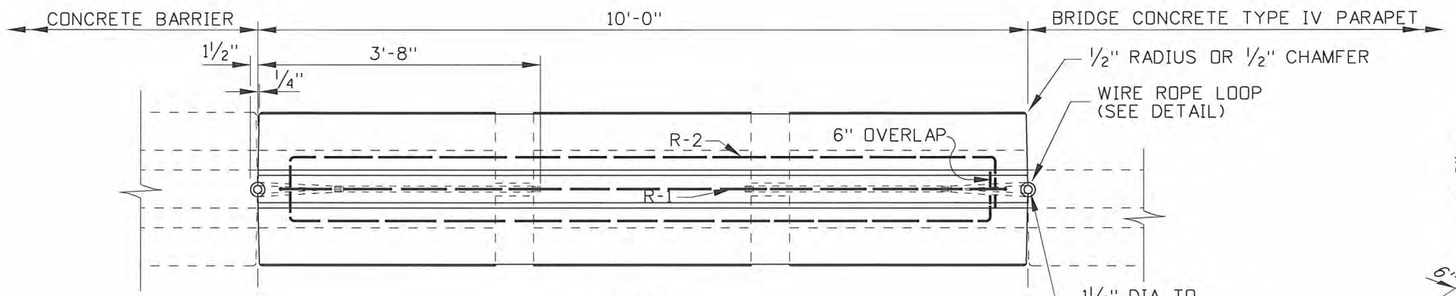

PLAN

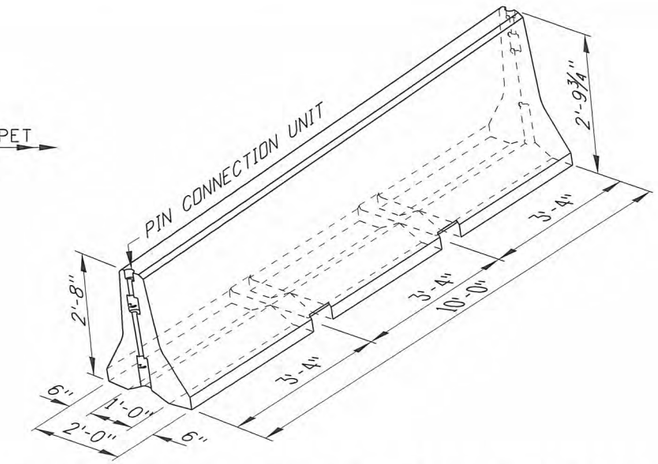

PERSPECTIVE - SHOWING BACK OF CONNECTOR

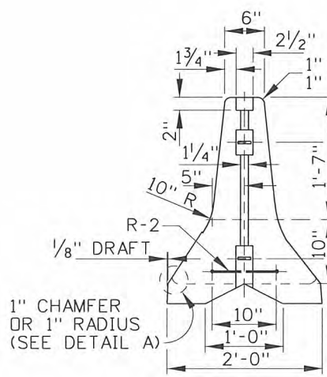

END VIEW A-A

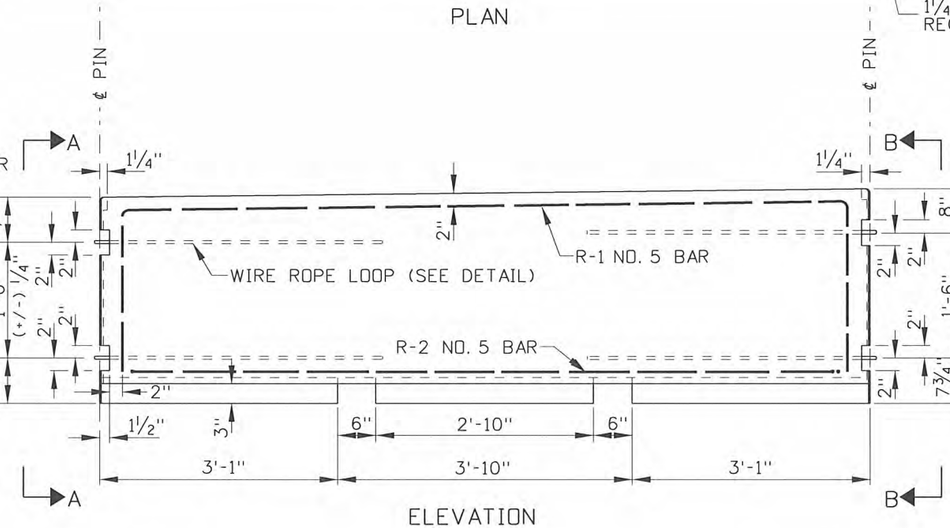

ELEVATION

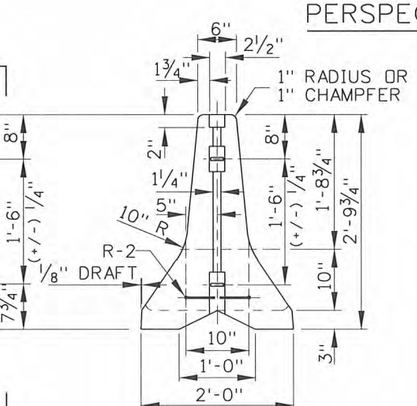

END VIEW B-B

BARRIER DETAILS

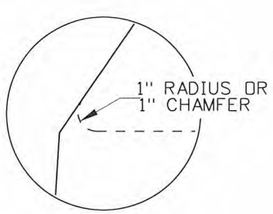

DETAIL A

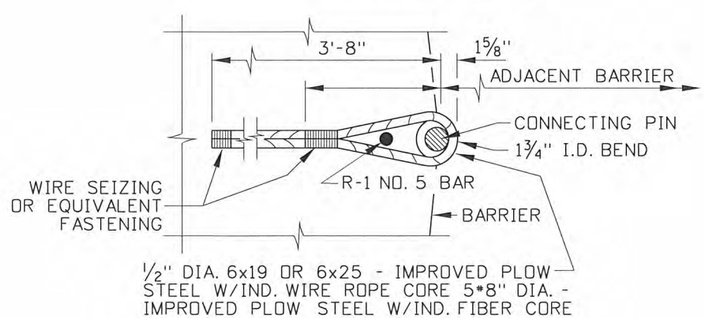

WIRE ROPE LOOP DETAIL

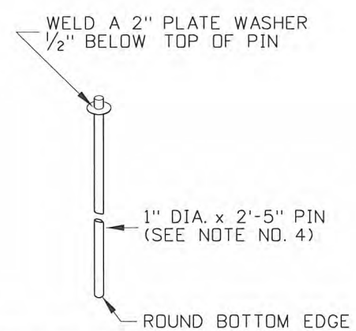

CONNECTING PIN

NOTES

1. THIS DRAWING DEPICTS THE CONCRETE TRANSITION BARRIER AS A LIMITED USE ITEM THAT DOES NOT MEET NCHRP 350 TL-3 REQUIREMENTS AND IS FOR MAINTENANCE PURPOSES ONLY.
2. THE STEEL CONNECTOR PINS SHALL CONFORM TO ASTM A 36 REQUIREMENTS.
3. THE UNIT SHALL BE PRECAST USING CONCRETE CLASS 40B. THE MINIMUM CONCRETE COVER OVER REINFORCEMENT STEEL SHALL BE 2" UNLESS OTHERWISE NOTED.
4. THIS TRANSTION BARRIER IS USED TO TRANSTION FROM OLDER CENTERLINE BRIDGE BARRIER TO CURRENT BARRIER TYPES.
5. NOT TO SCALE.

REVISIONS

NO.	DATE	BY	NO.	DATE	BY	NO.	DATE	BY
1	6-80		6	9-02	MSM			
2	1-82		7	11-04	MSM			
3	5-82		8	2-96	MSM			
4	2-96	MSM	9	9-10	PLR			
5	5-99	MSM						

SCALES SHOWN ARE FOR 11" X 17" PRINTS ONLY

CADD FILE NAME: g2e_1210.std

DRAWING DATE: NOVEMBER, 1974

IDAHO TRANSPORTATION DEPARTMENT

BOISE IDAHO

ASSISTANT CHIEF ENGINEER (DEVELOPMENT)

CHIEF ENGINEER

STANDARD DRAWING

CONCRETE TRANSITION BARRIER

REQUIRES STD. DWG. G-2-A

English

STANDARD DRAWING NO.

G-2-E

SHEET 1 OF 1

PROFESSIONAL ENGINEER REGISTERED 6506 STATE OF IDAHO TED E. MASON 12/6/2010

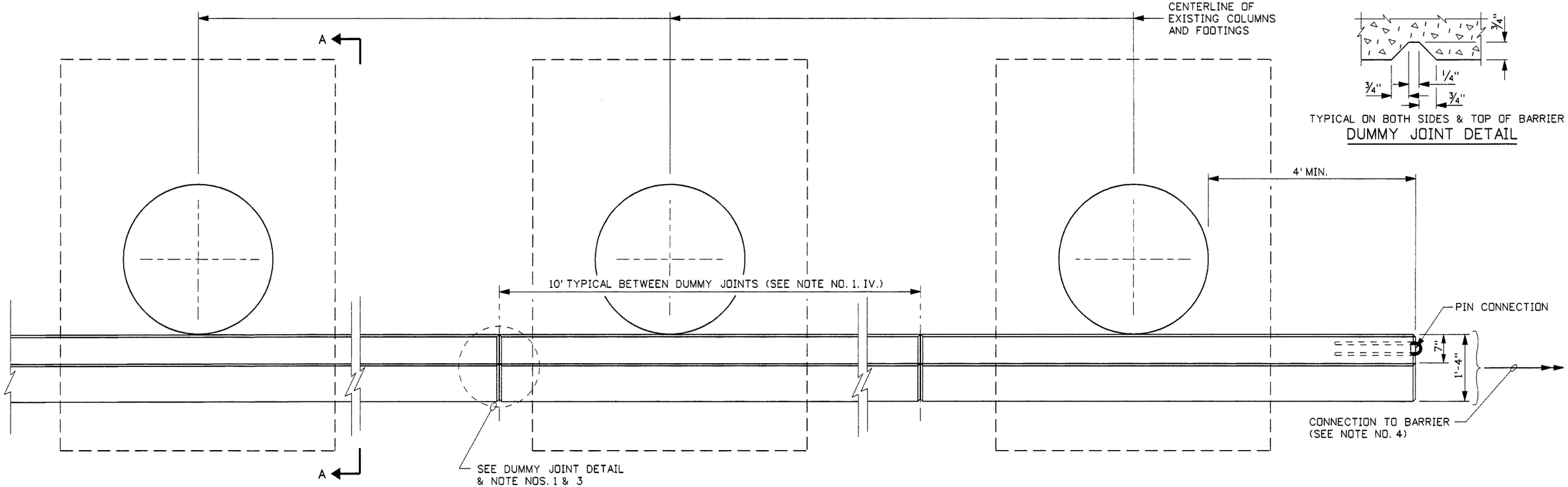

PLAN

TYPICAL ON BOTH SIDES & TOP OF BARRIER

DUMMY JOINT DETAIL

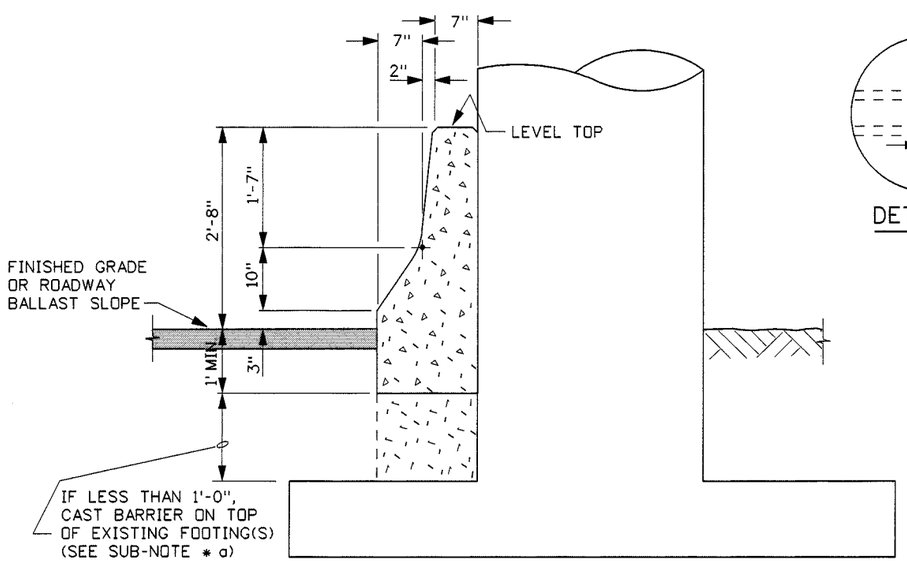

SECTION A-A

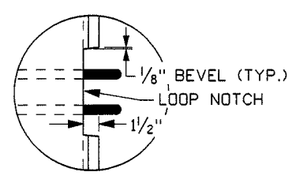

DETAIL B

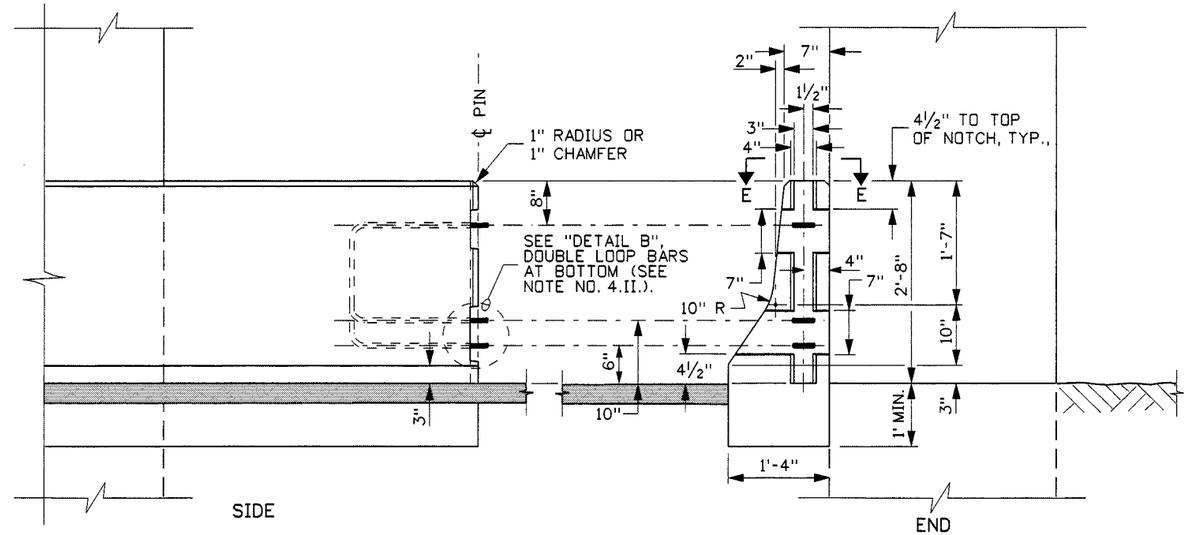

CONNECTION END VIEWS

(10' BARRIER END SHOWN)

SUB-NOTES
* a WHEN CONCRETE BARRIER IS EXTENDED TO THE PIER FOOTING THE CONTRACTOR SHALL HAVE THE OPTION OF PLACING THE EXTENSION JUST OVER THE FOOTING OR PLACING THE EXTENSION CONTINUOUS ALONG THE TOTAL LENGTH OF THE BARRIER.

REVISIONS

NO.	DATE	BY	NO.	DATE	BY	NO.	DATE	BY
1	12-92	MSM	6	5-07	MSM			
2	9-93	MSM						
3	3-00	MSM						
4	6-03	MSM						
5	8-05	MSM						

SCALES SHOWN ARE FOR 11" X 17" PRINTS ONLY

CADD FILE NAME g2h_0507.std

DRWG. ORIG. DATE: MARCH, 1992

IDAHO TRANSPORTATION DEPARTMENT

BOISE IDAHO

R. B. Thomas
ASSISTANT CHIEF ENGINEER (DEVELOPMENT)

Steven C. Hutchinson
CHIEF ENGINEER

STANDARD DRAWING

SPECIAL CAST-IN-PLACE CONCRETE BARRIER

REQUIRES SHEET 2 OF 2 & STD. DWG. G-2-A-1 OR G-2-A-2

English

STANDARD DRWG. NO.

G-2-H

SHEET 1 OF 2

PROFESSIONAL ENGINEER * LAND SURVEYOR
REGISTERED
2240
5-17-07
STATE OF IDAHO
MILFORD MILLER

METAL REINFORCEMENT TABLE (SEE SUB-NOTES * c & * d)				
MARK	LOCATION	BAR SIZE	(NO.BARS)	SKETCH
H-1	HORIZONTAL IN BARRIER TIED INSIDE V-1 BARS	NO. 5	(10)	(SEE NOTE NO. 9)
R-1	VERTICAL IN BARRIER TIED T ON R-2 ON BACK	NO. 4	VARIES WITH LENGTH	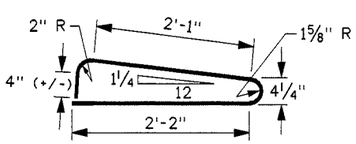
R-2	VERTICAL IN BARRIER TIED T ON R-1 ON BACK	NO. 4	VARIES WITH LENGTH	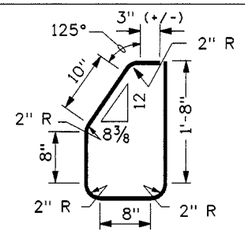

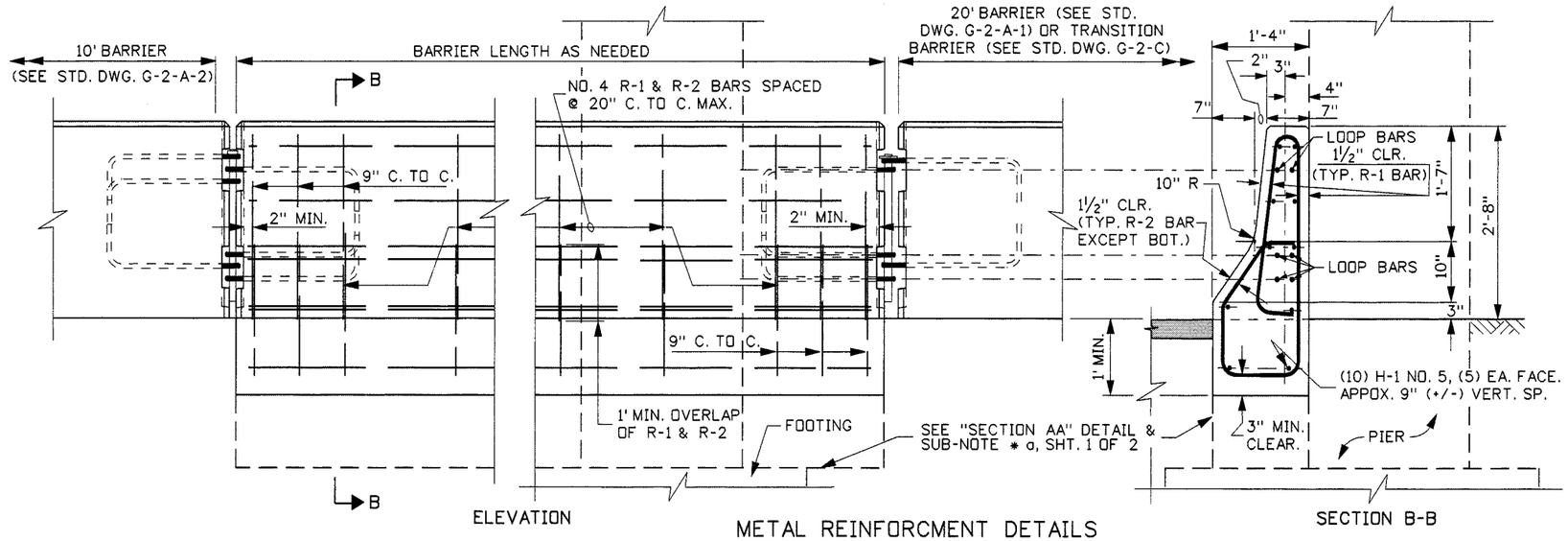

METAL REINFORCMENT DETAILS

SUB-NOTES
* b ALL METAL REINFORCEMENT BENDS ARE TO BE ACCORDING TO THE LATEST A.C.I. STANDARD PRACTICE AND AASHTO SPECIFICATIONS.
* c DIMENSIONS SHOWN IN THE "METAL REINFORCEMENT TABLE" ARE OUT-TO-OUT (O. TO O.) OF BEND POINTS AND/OR END OF BARS UNLESS OTHERWISE NOTED.

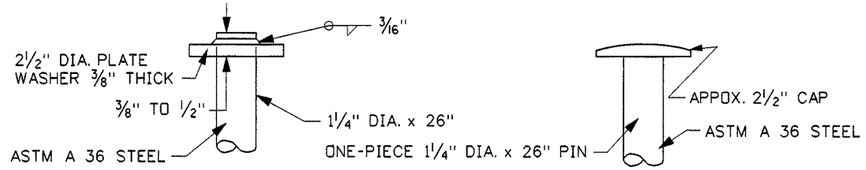

FABRICATED CONNECTING PIN

ONE-PIECE CONNECTING PIN

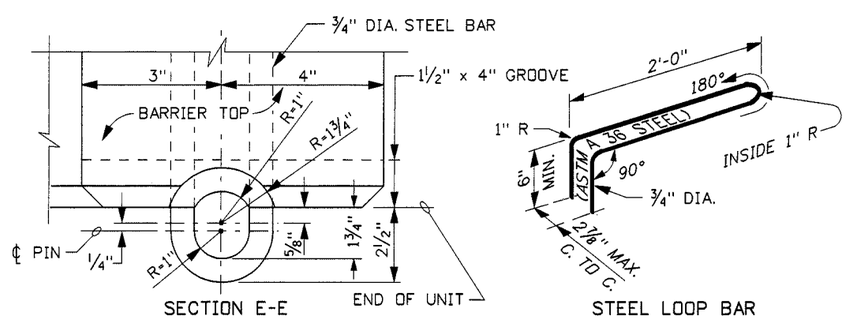

SECTION E-E

STEEL LOOP BAR

CONNECTION DETAILS

NOTES

1. SPECIAL CAST-IN-PLACE CONCRETE BARRIER SHALL BE:
   I. THE UNIT SHALL BE CAST-IN-PLACE USING CONCRETE CLASS 40B. THE MINIMUM CONCRETE COVER OVER REINFORCEMENT STEEL SHALL BE 2" UNLESS OTHERWISE NOTED.
   II. CONSTRUCTED SO THAT THE OUTSIDE FACE IS FLUSH AGAINST THE ADJACENT COLUMN. THE HEIGHT CONTROL SHALL BE AT THE INSIDE FACE.
   III. EPOXY COATED METAL REINFORCEMENT SHALL BE IN ACCORDANCE WITH SECTION 708 - METALS, SUBSECTION 708.02 - REINFORCING STEEL, OF THE CURRENT ITD STANDARD SPECIFICATIONS FOR HIGHWAY CONSTRUCTION.
   IV. THE DUMMY JOINT SPACING SHALL BE 10' OR 20' DEPENDING ON THE LENGTH OF THE ATTACHED MOVEABLE BARRIER. IF NO BARRIER IS ATTACHED THE DUMMY JOINT SPACING SHALL BE 10'.
2. WHEN STANDARD PRECAST BARRIER UNITS ARE USED TO CONTINUE A CAST-IN-PLACE INSTALLATION THE BARRIER FACES SHALL MATCH AND BE IN LINE (IT MAY BE NECESSARY TO SET THE PRECAST BARRIER ON A SAND-CEMENT GROUT LEVELING PAD TO ASSURE THE PROPER HORIZONTAL AND VERTICAL ALIGNMENT OF THE FACES).
3. ALL THE CONCRETE AND REINFORCING STEEL SHOWN SHALL BE INCLUDED IN THE BID ITEM.
4. WHEN TERMINATING THE CAST-IN-PLACE BARRIER:
   I. PREDETERMINE THE APPROPRIATE END LOOPS WHEN CONTINUING WITH 10' OR 20' CONCRETE BARRIER.
   II. WHEN CONTINUING WITH THE TRANSITION BARRIER PLACE THE DOUBLE LOOPS IN THE BOTTOM OF THE CAST-IN-PLACE BARRIER CONFIGURATION (SEE STD. DWG. G-2-A-2).
5. THE STEEL CONNECTOR PIN & CONNECTION LOOPS SHALL CONFORM TO ASTM A 36 REQUIREMENTS. THE EXPOSED CONNECTING LOOP ENDS MAY NEED TO BE BENT, (MECHANICALLY, NOT WITH HEAT) TO FIT THE CONNECTING BARRIER LOOPS.
6. REFER TO THE ROADWAY PLANS FOR THE TYPE OF TERMINAL TO BE USED WITH THE CAST-IN-PLACE CONCRETE BARRIER AND LOCATION OF DELINEATORS WHEN REQUIRED.
9. METAL REINFORCEMENT FOR H-1 BARS SHALL BE CONTINUOUS FOR LENGTHS 40' AND LESS. LAPS SHALL BE A MINIMUM OF 24" FOR LENGTHS GREATER THAN 40'.
10. NOT TO SCALE.

REVISIONS								
NO.	DATE	BY	NO.	DATE	BY	NO.	DATE	BY
1	12-92	MSM	6	5-07	MSM			
2	9-93	MSM						
3	3-00	MSM						
4	6-03	MSM						
5	8-05	MSM						

SCALES SHOWN ARE FOR 11" X 17" PRINTS ONLY

CADD FILE NAME g2h_0507.std

DRWG. ORIG. DATE: MARCH, 1992

IDAHO TRANSPORTATION DEPARTMENT

BOISE IDAHO

ASSISTANT CHIEF ENGINEER (DEVELOPMENT)

CHIEF ENGINEER

STANDARD DRAWING

SPECIAL CAST-IN-PLACE CONCRETE BARRIER

REQUIRES SHEET 1 OF 2 & STD. DWG. G-2-A-1 OR G-2-A-2

English

STANDARD DRWG. NO.

G-2-H

SHEET 2 OF 2

PROFESSIONAL ENGINEER * LAND SURVEYOR REGISTERED 2240 5-17-07 STATE OF IDAHO MILFORD MILLER

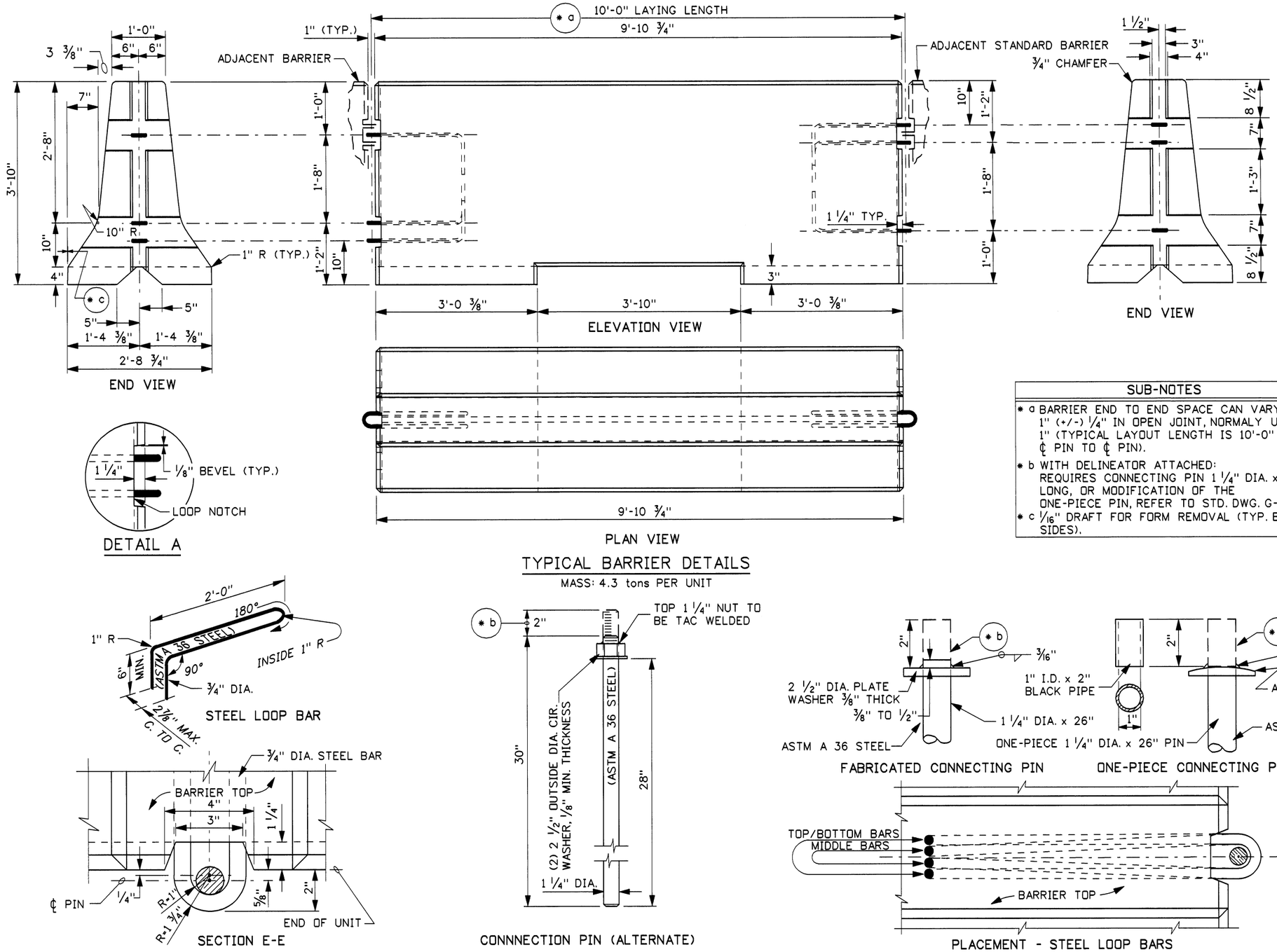

TYPICAL BARRIER DETAILS

MASS: 4.3 tons PER UNIT

CONNECTION DETAILS

SUB-NOTES
* a BARRIER END TO END SPACE CAN VARY, 1" (+/-) 1/4" IN OPEN JOINT, NORMALY USE 1" (TYPICAL LAYOUT LENGTH IS 10'-0" ℄ PIN TO ℄ PIN).
* b WITH DELINEATOR ATTACHED: REQUIRES CONNECTING PIN 1 1/4" DIA. x 32" LONG, OR MODIFICATION OF THE ONE-PIECE PIN, REFER TO STD. DWG. G-3-A.
* c 1/16" DRAFT FOR FORM REMOVAL (TYP. BOTH SIDES).

REVISIONS								
NO.	DATE	BY	NO.	DATE	BY	NO.	DATE	BY

SCALES SHOWN ARE FOR 11" X 17" PRINTS ONLY

CADD FILE NAME g2i11004.std

DRWG. ORIG. DATE: OCTOBER, 2004

IDAHO TRANSPORTATION DEPARTMENT

BOISE IDAHO

Steven C. Hutchinson
ASSISTANT CHIEF ENGINEER (DEVELOPMENT)

CHIEF ENGINEER

STANDARD DRAWING

TALL CONCRETE MEDIAN BARRIER

REQUIRES SHEET 2 OF 2

English

STANDARD DRWG. NO.

G-2-I-1

SHEET 1 OF 2

PROFESSIONAL ENGINEER REGISTERED 2240 10/15/04 STATE OF IDAHO MILFORD MILLER

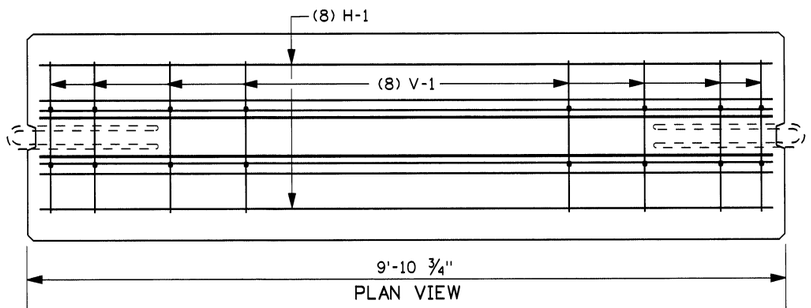

PLAN VIEW

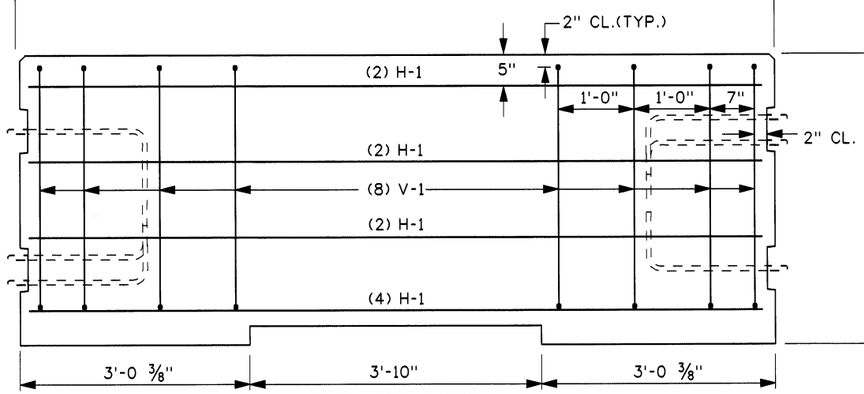

ELEVATION VIEW

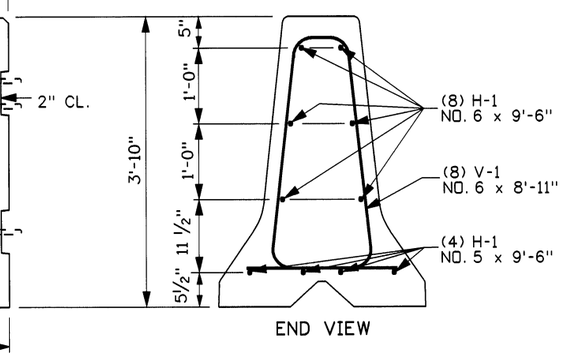

END VIEW

METAL REINFORCEMENT

METAL REINFORCEMENT TABLE				
MARK	LOCATION	BAR SIZE	(NO.BARS)	SKETCH
H-1	HORIZONTAL INSIDE BARRIER TIED INSIDE & UNDERNEATH V-1 BARS	NO. 5	(10)	9'-6"
V-1	VERTICAL IN BARRIER (4) EACH HALF	NO. 5	(8)	TOTAL LENGTH 8'-11" 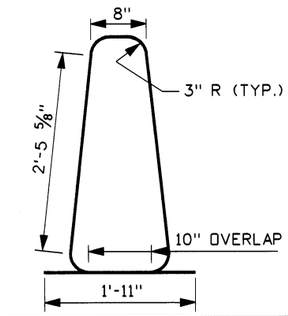

NOTES

1. THE UNIT SHALL BE PRECAST USING CONCRETE CLASS 40B. THE MIN. CONCRETE COVER OVER REINFORCEMENT STEEL SHALL BE 2" UNLESS OTHERWISE NOTED.
2. REINFORCING STEEL CONSISTS OF DEFORMED BARS CONFORMING TO AASHTO M31 (ASTM A615, GRADE 60).
3. CONNECT EACH 10' TALL SECTION WITH A 1 1/4" DIA. x 30" PIN (A 36 STEEL).
4. IN NARROW PAVED (FLUSH) MEDIAN APPLICATIONS, REFLECTORIZE BOTH SIDES.
5. EITHER A 3/4" CHAMFER OR RADIUS ON THE BARRIER CORNERS AND EDGES IS ACCEPTABLE.
6. NOT TO SCALE.

REVISIONS								
NO.	DATE	BY	NO.	DATE	BY	NO.	DATE	BY

SCALES SHOWN ARE FOR 11" X 17" PRINTS ONLY

CADD FILE NAME g2i11004.std

DRWG. ORIG. DATE: OCTOBER, 2004

IDAHO TRANSPORTATION DEPARTMENT

BOISE IDAHO

ASSISTANT CHIEF ENGINEER (DEVELOPMENT)

CHIEF ENGINEER

STANDARD DRAWING

TALL CONCRETE MEDIAN BARRIER

REQUIRES SHEET 1 OF 2

English

STANDARD DRWG. NO.

G-2-I-1

SHEET 2 OF 2

PROFESSIONAL ENGINEER REGISTERED 2240 10/15/04 STATE OF IDAHO MILFORD MILLER

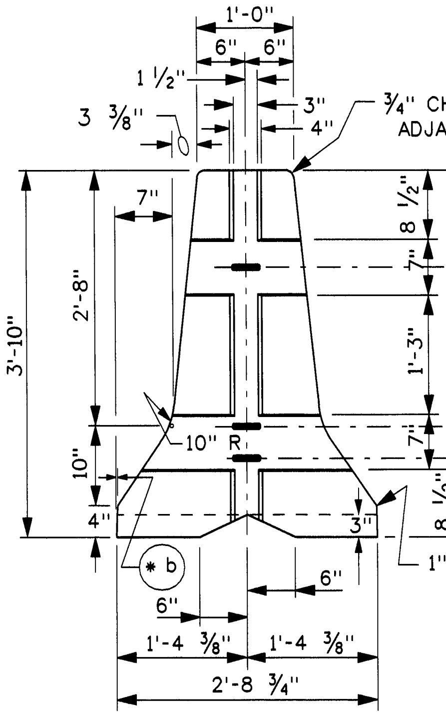

LEFT END VIEW

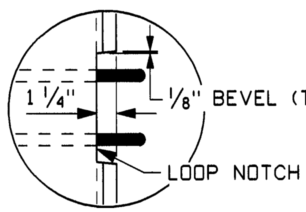

DETAIL A

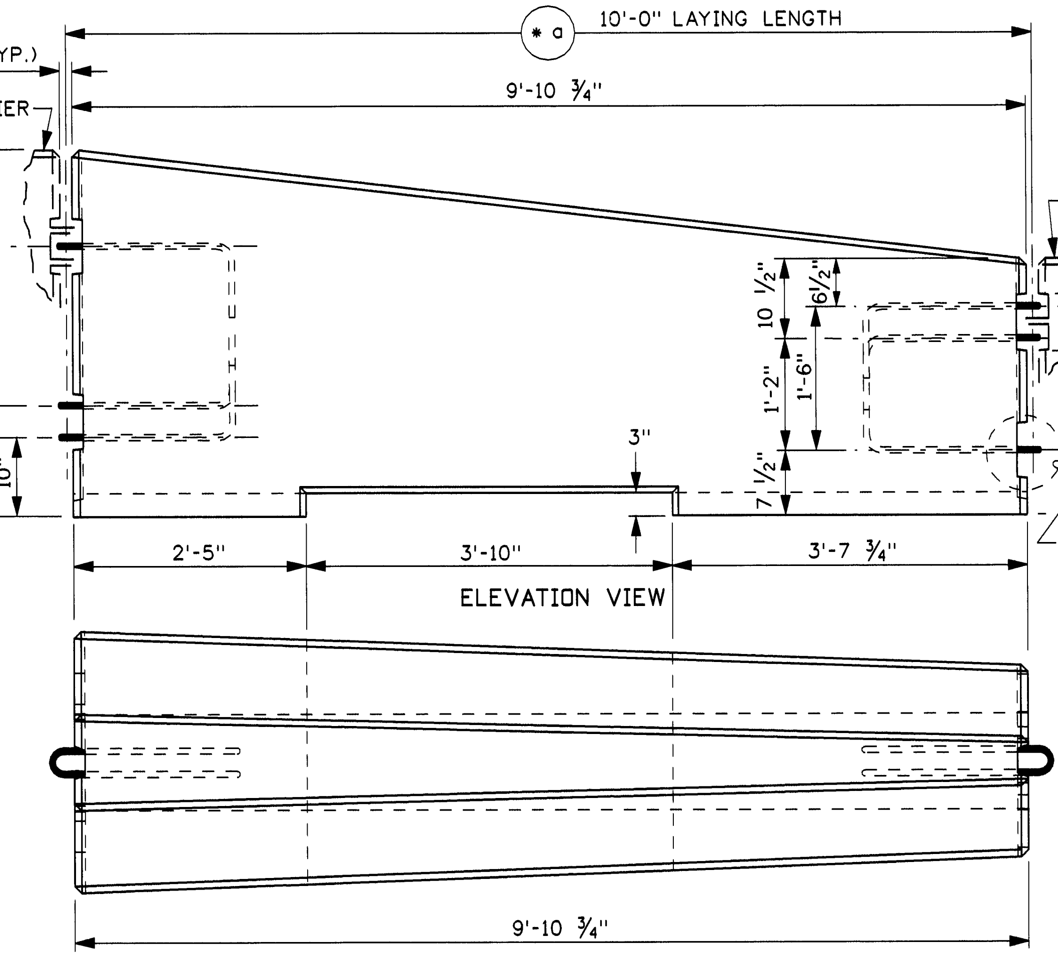

ELEVATION VIEW

PLAN VIEW

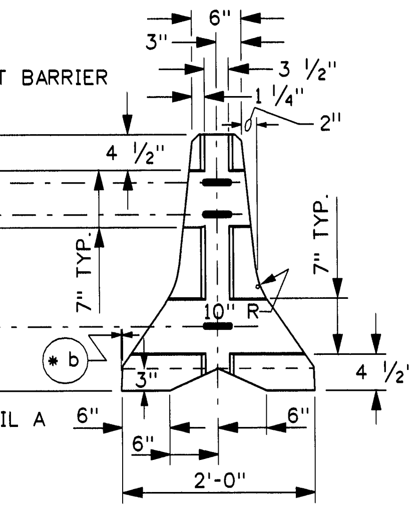

RIGHT END VIEW

TYPICAL CONNECTOR BARRIER DETAILS

MASS: 3.2 tons PER UNIT

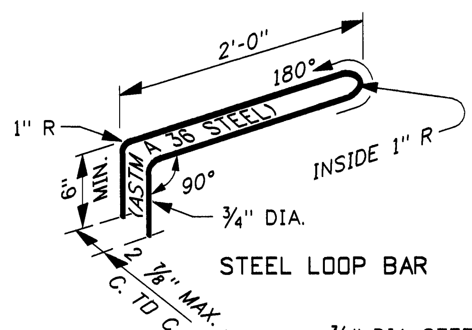

STEEL LOOP BAR

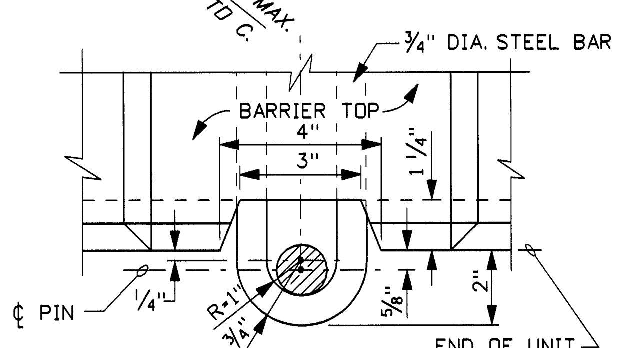

SECTION E-E

CONNECTION DETAILS

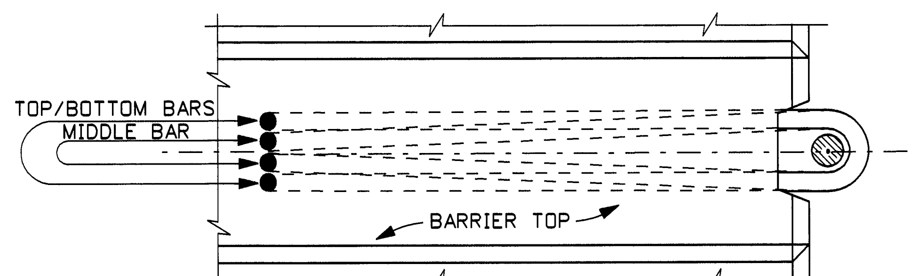

PLACEMENT - STEEL LOOP BARS

SUB-NOTES
* a BARRIER END TO END SPACE CAN VARY, 1" (+/-) 1/4" IN OPEN JOINT, NORMALY USE 1" (TYPICAL LAYOUT LENGTH IS 10'-0" ¢ PIN TO ¢ PIN).
* b 1/16" DRAFT FOR FORM REMOVAL (TYP. BOTH SIDES)

NOTES

1. THE UNIT SHALL BE PRECAST USING CONCRETE CLASS 40B. THE MIN. CONCRETE COVER OVER REINFORCEMENT STEEL SHALL BE 2" UNLESS OTHERWISE NOTED.
2. REINFORCING STEEL CONSISTS OF DEFORMED BARS CONFORMING TO AASHTO M31 (ASTM A615, GRADE 60).
3. CONNECT EACH TRANSITION BARRIER WITH A 1 1/4" DIA. x 30" PIN ON THE TALL SIDE AND A 1 1/4" DIA. x 26" PIN ON THE STANDARD BARRIER SIDE. USE ASTM A 36 STEEL FOR BOTH PINS.
4. NORMALLY DELINEATION IS NOT PLACED ON TRANSITION BARRIERS: REFLECTORIZE AS NEEDED AND FOLLOW THE MANUFACTURER'S SPECIFICATIONS FOR ADHESIVE MOUNTING.
5. IN NARROW PAVED (FLUSH) MEDIAN APPLICATIONS, REFLECTORIZE BOTH SIDES.
6. EITHER A 3/4" CHAMFER OR RADIUS ON THE BARRIER CORNERS AND EDGES IS ACCEPTABLE.
7. NOT TO SCALE.

REVISIONS								
NO.	DATE	BY	NO.	DATE	BY	NO.	DATE	BY

SCALES SHOWN ARE FOR 11" X 17" PRINTS ONLY

CADD FILE NAME g2i21004.std

DRWG. ORIG. DATE: OCTOBER, 2004

IDAHO TRANSPORTATION DEPARTMENT

BOISE IDAHO

ASSISTANT CHIEF ENGINEER (DEVELOPMENT)

CHIEF ENGINEER

STANDARD DRAWING

TALL TO STANDARD TRANSITION BARRIER

REQUIRES SHEET 2 OF 2

English

STANDARD DRWG. NO.

G-2-I-2

SHEET 1 OF 2

PROFESSIONAL ENGINEER REGISTERED 2240 10/15/04 STATE OF IDAHO MILFORD MILLER

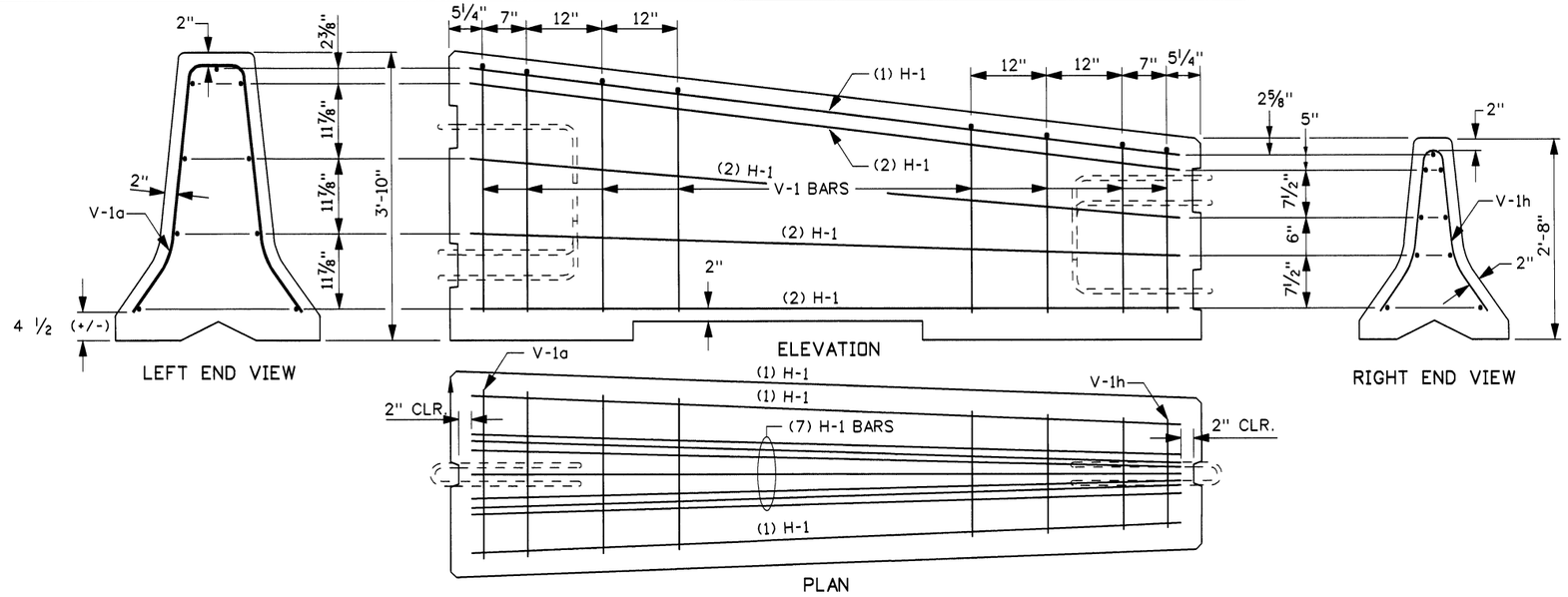

METAL REINFORCEMENT

METAL REINFORCEMENT TABLE

MARK	LOCATION	BAR SIZE	(NO.BARS)	SKETCH
H-1	HORIZONTAL INSIDE BARRIER TIED INSIDE & UNDERNEATH V-1 BARS	NO. 5	(9)	9'-6"
V-1a	VERTICAL IN BARRIER (1) UPPER HALF	NO. 5	(1)	TOTAL LENGTH 7'-5"; 2" R (TYP.); 6°; 8 7/8"; 2'-2 7/8"; 2'-1 3/4"; 7 3/8"; 12" R (TYP.)
V-1b	VERTICAL IN BARRIER (1) UPPER HALF	NO. 5	(1)	TOTAL LENGTH 7'-1 1/4"; 2" R (TYP.); 6°; 8 3/8"; 2'-2 1/4"; 2'-1 3/4"; 7 3/8"; 12" R (TYP.)
V-1c	VERTICAL IN BARRIER (1) UPPER HALF	NO. 5	(1)	TOTAL LENGTH 6'-9 7/8"; 2" R (TYP.); 6°; 8"; 2'-1 1/8"; 1'-10 1/2"; 7 3/8"; 12" R (TYP.)
V-1d	VERTICAL IN BARRIER (1) UPPER HALF	NO. 5	(1)	TOTAL LENGTH 6'-6 1/4"; 2"R (TYP.); 6°; 7 3/8"; 2'-0"; 1'-10 1/2"; 7 3/8"; 12" R (TYP.)
V-1e	VERTICAL IN BARRIER (1) LOWER HALF	NO. 5	(1)	TOTAL LENGTH 5'-4 1/4"; 1 1/2" R (TYP.); 6°; 4 7/8"; 1'-7 7/8"; 1'-3 1/4"; 7 3/8"; 12" R (TYP.)
V-1f	VERTICAL IN BARRIER (1) LOWER HALF	NO. 5	(1)	TOTAL LENGTH 5'-4 1/4"; 1 1/2" R (TYP.); 6°; 4 1/4"; 1'-6 7/8"; 1'-2 3/4"; 7 3/8"; 12" R (TYP.)
V-1g	VERTICAL IN BARRIER (1) LOWER HALF	NO. 5	(1)	TOTAL LENGTH 5'-4 1/4"; 1 1/2" R (TYP.); 6°; 3 1/2"; 1'-5 3/4"; 1'-1 5/8"; 7 3/8"; 12" R (TYP.)
V-1h	VERTICAL IN BARRIER (1) LOWER HALF	NO. 5	(1)	TOTAL LENGTH 4'-7 1/8"; (1) 1 1/2" R; 6°; 3"; 1'-5 1/8"; 1'-1 3/8"; 7 3/8"; 12" R (TYP.)

REVISIONS								
NO.	DATE	BY	NO.	DATE	BY	NO.	DATE	BY

SCALES SHOWN ARE FOR 11" X 17" PRINTS ONLY

CADD FILE NAME g2i21004.std

DRWG. ORIG. DATE: OCTOBER, 2004

IDAHO TRANSPORTATION DEPARTMENT

BOISE IDAHO

ASSISTANT CHIEF ENGINEER (DEVELOPMENT)

CHIEF ENGINEER

STANDARD DRAWING

TALL TO STANDARD TRANSITION BARRIER

REQUIRES SHEET 1 OF 2

English

STANDARD DRWG. NO.

G-2-I-2

SHEET 2 OF 2

PROFESSIONAL ENGINEER REGISTERED 2240 10/15/04 STATE OF IDAHO MILFORD MILLER

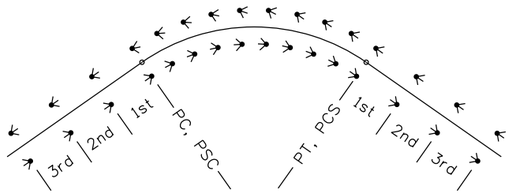

HORIZONTAL CURVE

* a (SEE SUB-NOTES) SPACING FOR HORIZONTAL CURVES				
CURVE RADIUS (FEET)	SPACING ON CURVE	1st SPACE BEYOND PCS, PSC, PC, PT	2nd SPACE BEYOND PCS, PSC, PC, PT	3rd SPACE BEYOND PCS, PSC, PC, PT
> 10000	300	528	528	528
7000 - 10000	250	528	528	528
4500 - 6999	200	528	528	528
2500 - 4499	150	300	528	528
1100 - 2499	100	200	300	528
700 - 1099	75	150	225	528
300 - 699	50	100	150	300
0 - 299	25	50	75	150

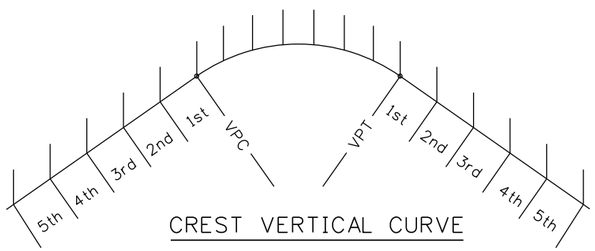

CREST VERTICAL CURVE

* a (SEE SUB-NOTES) SPACING FOR VERTICAL CURVES						
K * b (SEE SUB-NOTES)	SPACING ON CURVE	1st SPACE BEYOND VPC OR VPT	2nd SPACE BEYOND VPC OR VPT	3rd SPACE BEYOND VPC OR VPT	4th SPACE BEYOND VPC OR VPT	5th SPACE BEYOND VPC OR VPT
OVER 550	528	528	528	528	528	528
400-549	300	528	528	528	528	528
200-399	200	300	528	528	528	528
100-199	100	150	200	300	528	528
50-99	75	100	150	200	300	528
0-49	50	75	100	150	200	300

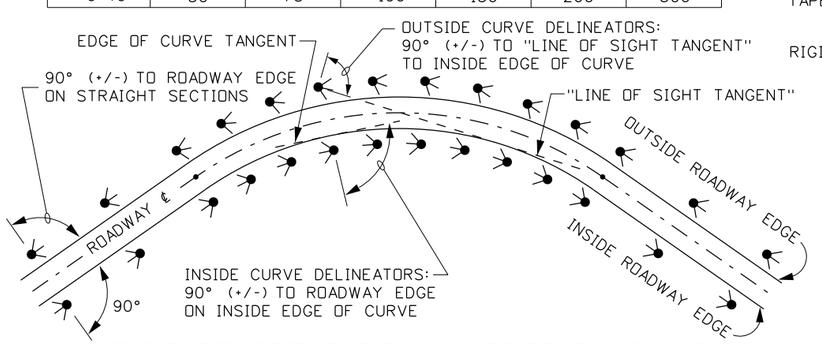

DELINEATOR ORIENTATION ON HORIZONTAL CURVES

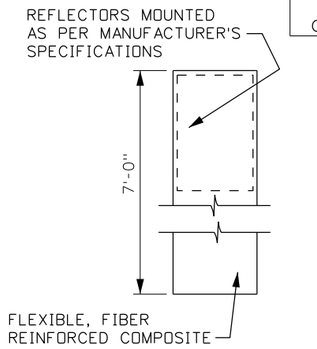

REFLECTOR MOUNTING

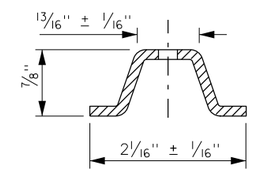

SECTION VIEW

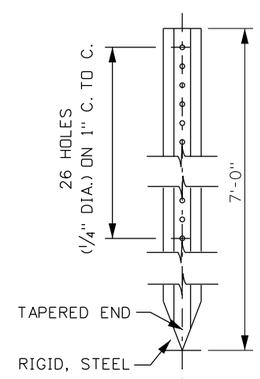

FRONT - ELEVATION

LATERAL PLACEMENT	
SLOPE	OFFSET
4:1	4'-0"-6'-0"
6:1 OR FLATTER	6'-0"-8'-0"
CURB SECTION	6'-0"
SPECIAL CONDITIONS	8'-0" (SEE NOTE NO. 8)

* c (SEE SUB-NOTES)

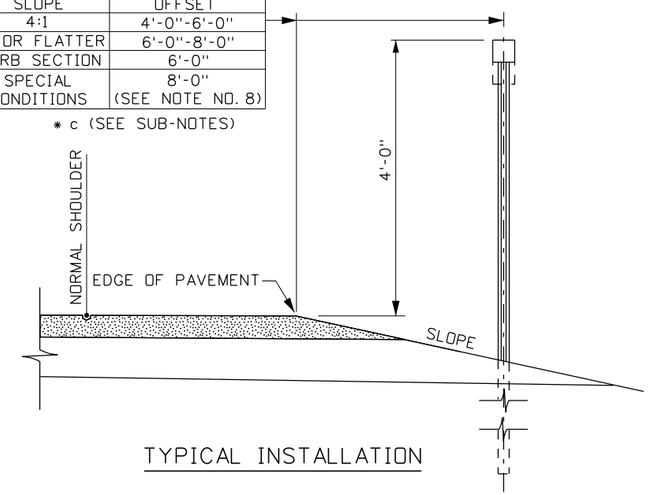

TYPICAL INSTALLATION

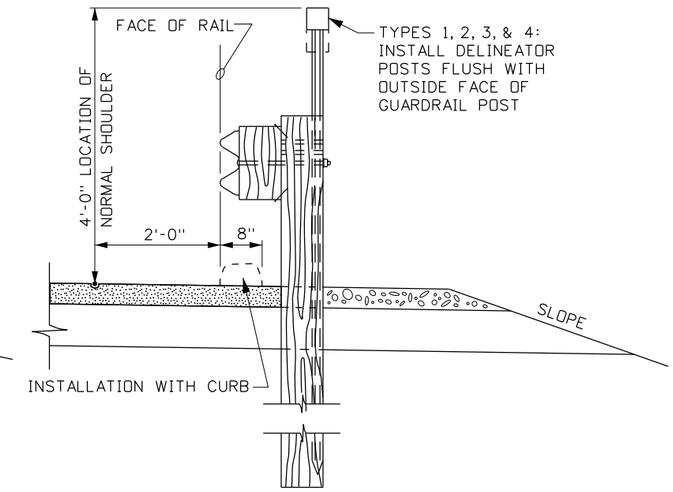

INSTALLATION WITH W-BEAM

(NOTE: THRIE-BEAM INSTALLATIONS INCLUDED)

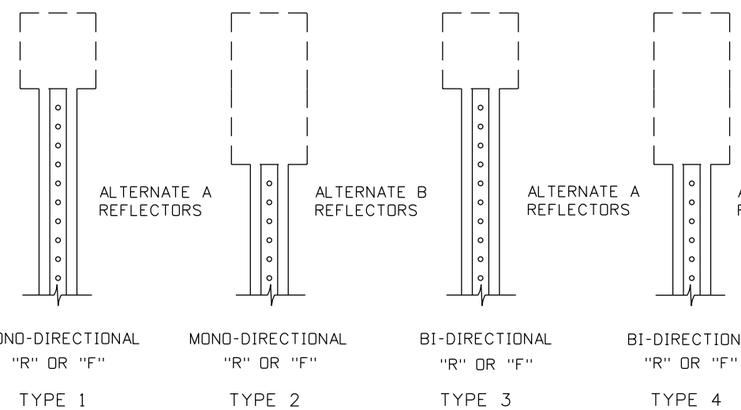

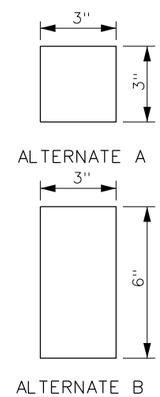

REFLECTORS MOUNTED ON ALUMINUM OR DIRECTLY APPLIED TO FLEXIBLE POST

REFLECTIVE SHEETING

REFLECTOR DETAILS

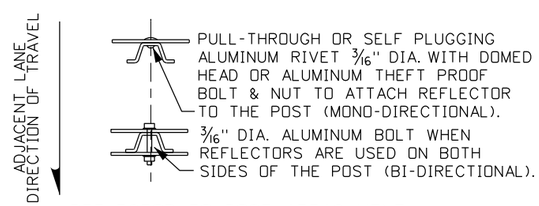

REFLECTOR TO POST ATTACHMENT

POST "F" DETAILS

SUB-NOTES

* a THE DELINEATOR DISTANCE SHALL BE ROUNDED TO THE NEAREST 10' WHEN INSTALLED ON CONCRETE BARRIER.
* b K = L/A WHERE: L = LENGTH OF VERTICAL CURVE IN FEET. A = ALGEBRAIC CHANGE OF GRADE IN PERCENT. (EXAMPLES: GRADES ARE +3% & -2%, A = 5 OR GRADES ARE +3% & +1%, A = 2)
* c PLACEMENT SHALL BE KEPT CONSTANT ALONG ROADWAY UNLESS OBSTRUCTED

ORIGINAL STORED AT: ITD, Headquarters 3311 West State Boise, Idaho

ORIGINAL SIGNED BY: TED E. MASON
DATE ORIGINAL SIGNED: NOVEMBER 1, 2011

REVISIONS								
NO.	DATE	BY	NO.	DATE	BY	NO.	DATE	BY
1	6-05	MSM						
2	11-11	TEM						

SCALES SHOWN ARE FOR 11" X 17" PRINTS ONLY

CADD FILE NAME: g3a_1111.std

DRAWING DATE: DECEMBER, 2002

IDAHO TRANSPORTATION DEPARTMENT

BOISE IDAHO

HIGHWAYS PROGRAM OVERSIGHT ENGINEER

CHIEF ENGINEER

STANDARD DRAWING

DELINEATORS & INSTALLATION

REQUIRES SHEET 2 OF 2

English

STANDARD DRAWING NO.

G-3-A

SHEET 1 OF 2

SUB-NOTES
* d THE ONE-PIECE CONNECTING PIN NEEDS MODIFIED AND A LONGER STANDARD PIN MUST BE USED TO ACCOMMODATE DELINEATOR ATTACHMENT.

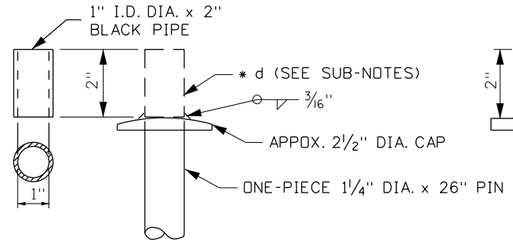

ONE-PIECE CONNECTING PIN

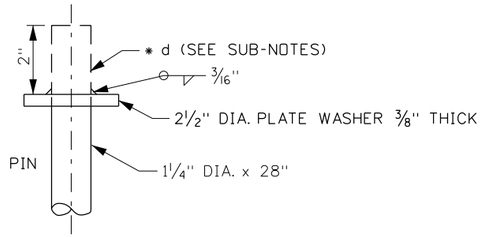

DELINEATOR CONNECTING PIN

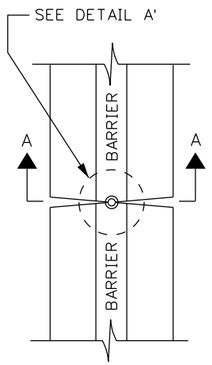

PLAN VIEW

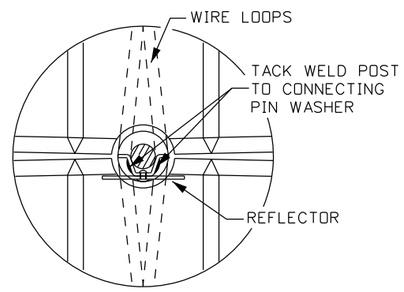

DETAIL A'

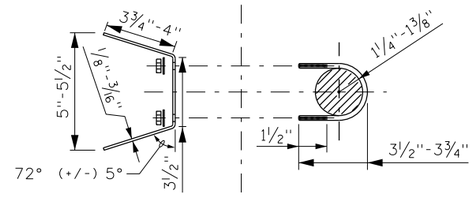

(BENT BAR & CLAMP)

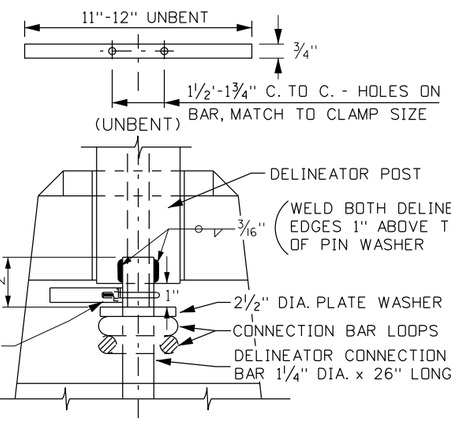

DETAIL B - ELEVATION

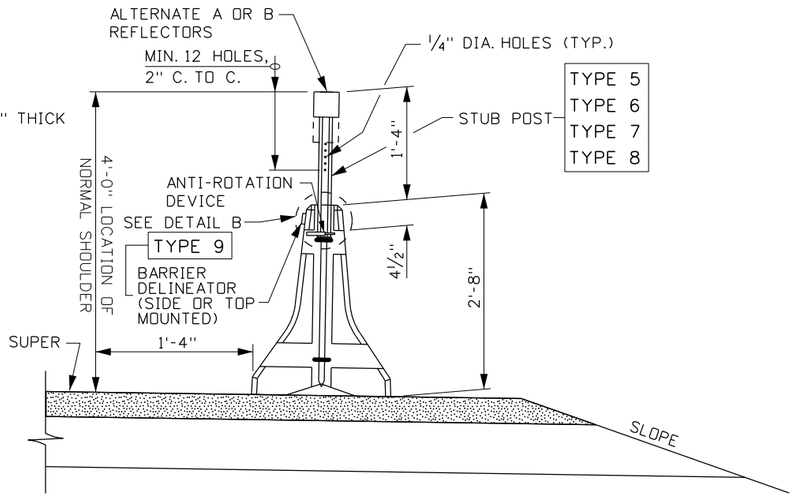

CONCRETE BARRIER - TYPICAL INSTALLATION

10' OR 20' BARRIER THAT MEETS NCHRP 350 REQUIREMENTS

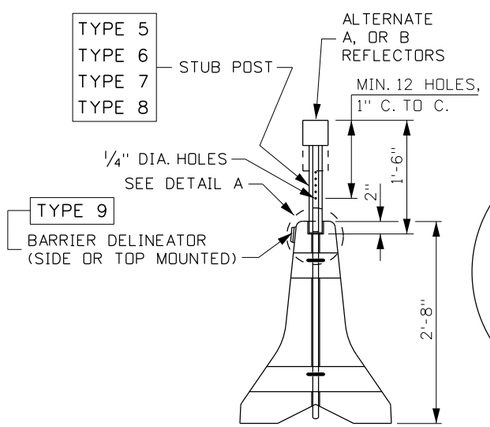

SECTION A-A

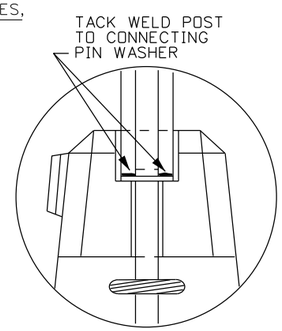

DETAIL A

OLD 10' CONCRETE GUARDRAIL INSTALLATION

(FOR EXISTING 10' BARRIER THAT DOES NOT MEET NCHRP 350 REQUIREMENTS, FOR MAINTENANCE PURPOSES ONLY.)

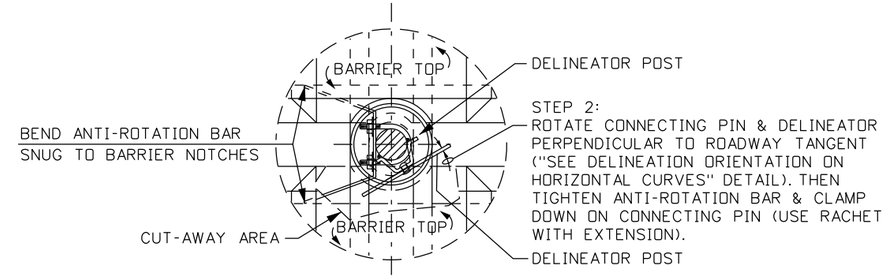

PLAN - ANTI-ROTATION BAR

10' & 20' CONCRETE BARRIER INSTALLATION DETAILS

(DO NOT CONFUSE WITH OLD CONCRETE GUARDRAIL)

NOTES

1. WHEN DELINEATION IS PROVIDED ONLY ON CURVES, (3) DELINEATORS SHALL BE PLACED BEFORE AND AFTER THE BEGINNING AND END OF THE CURVE.
2. PLACE TYPE 3 BI-DIRECTIONAL DELINEATORS ON THE LEFT SIDE OF TWO-WAY ROADWAYS AT EXTREME CURVES OF LESS THAN 984 FT. RADIUS (6° OR MORE) TO THE RIGHT. THEY MAY ALSO BE INSTALLED WHERE IT IS NOT POSSIBLE OR PRACTICAL TO INSTALL AND MAINTAIN RIGHT-HAND DELINEATION ON BOTH SIDES.
3. IF HORIZONTAL AND VERTICAL CURVES ARE COMBINED, USE THE MORE RESTRICTIVE SPACING.
4. WHEN DELINEATION IS USED ON TANGENTS, THE SPACING SHALL BE 528 ft. THE TANGENT SPACING SHALL BEGIN BEYOND THE SPACING REQUIREMENTS FOR HORIZONTAL AND VERTICAL CURVES.
5. DELINEATOR REFLECTOR COLORS SHALL BE AS SHOWN ON THE PLANS.
6. POST DETAIL: "R" = RIGID STEEL.
   "F" = FLEXIBLE, SELF ERECTING OR YIELDING.
   (TYPE "F" DELINEATORS SHALL BE WHITE UNLESS OTHERWISE SPECIFIED).

   THE DELINEATORS SHALL BE DESIGNATED, I.E., TYPE 1R OR TYPE 1F, ETC.
7. THE 8'-0" LATERAL PLACEMENT MAY BE JUSTIFIED BY SPECIAL CONDITIONS SUCH AS A NARROW ROADWAY AND A HISTORY OF DAMAGE BY WIDE LOADS.
8. DELINEATORS MOUNTED ON THE CONCRETE BARRIER ARE DESIGNATED AS FOLLOWS:
   - TYPE 5 = STUB POST - MONO-DIRECTIONAL 3"x3" REFLECTOR
   - TYPE 6 = STUB POST - MONO-DIRECTIONAL 3"x6" REFLECTOR
   - TYPE 7 = STUB POST - BI-DIRECTIONAL 3"x3" REFLECTORS
   - TYPE 8 = STUB POST - BI-DIRECTIONAL 3"x6" REFLECTORS
   - TYPE 9 = BARRIER DELINEATOR
9. OLD 10' CONCRETE GUARDRAIL INSTALLATION REFERS TO STANDARD DRAWING G-2-A. CURRENT 20' AND 10' CONCRETE BARRIERS ARE DETAILED IN STANDARD DRAWING G-2-A-1 AND G-2-1-2.
10. NOT TO SCALE.

ORIGINAL STORED AT: ITD, Headquarters 3311 West State Boise, Idaho

ORIGINAL SIGNED BY: TED E. MASON
DATE ORIGINAL SIGNED: NOVEMBER 1, 2011

REVISIONS								
NO.	DATE	BY	NO.	DATE	BY	NO.	DATE	BY
1	6-05	MSM						
2	11-11	TEM						

SCALES SHOWN ARE FOR 11" X 17" PRINTS ONLY

CADD FILE NAME: g3a_1111.std

DRAWING DATE: DECEMBER, 2002

IDAHO TRANSPORTATION DEPARTMENT

BOISE IDAHO

HIGHWAYS PROGRAM OVERSIGHT ENGINEER

CHIEF ENGINEER

STANDARD DRAWING

DELINEATORS & INSTALLATION

REQUIRES SHEET 1 OF 2

English

STANDARD DRAWING NO.

G-3-A

SHEET 2 OF 2

DETAIL A

DETAIL B

DETAIL C

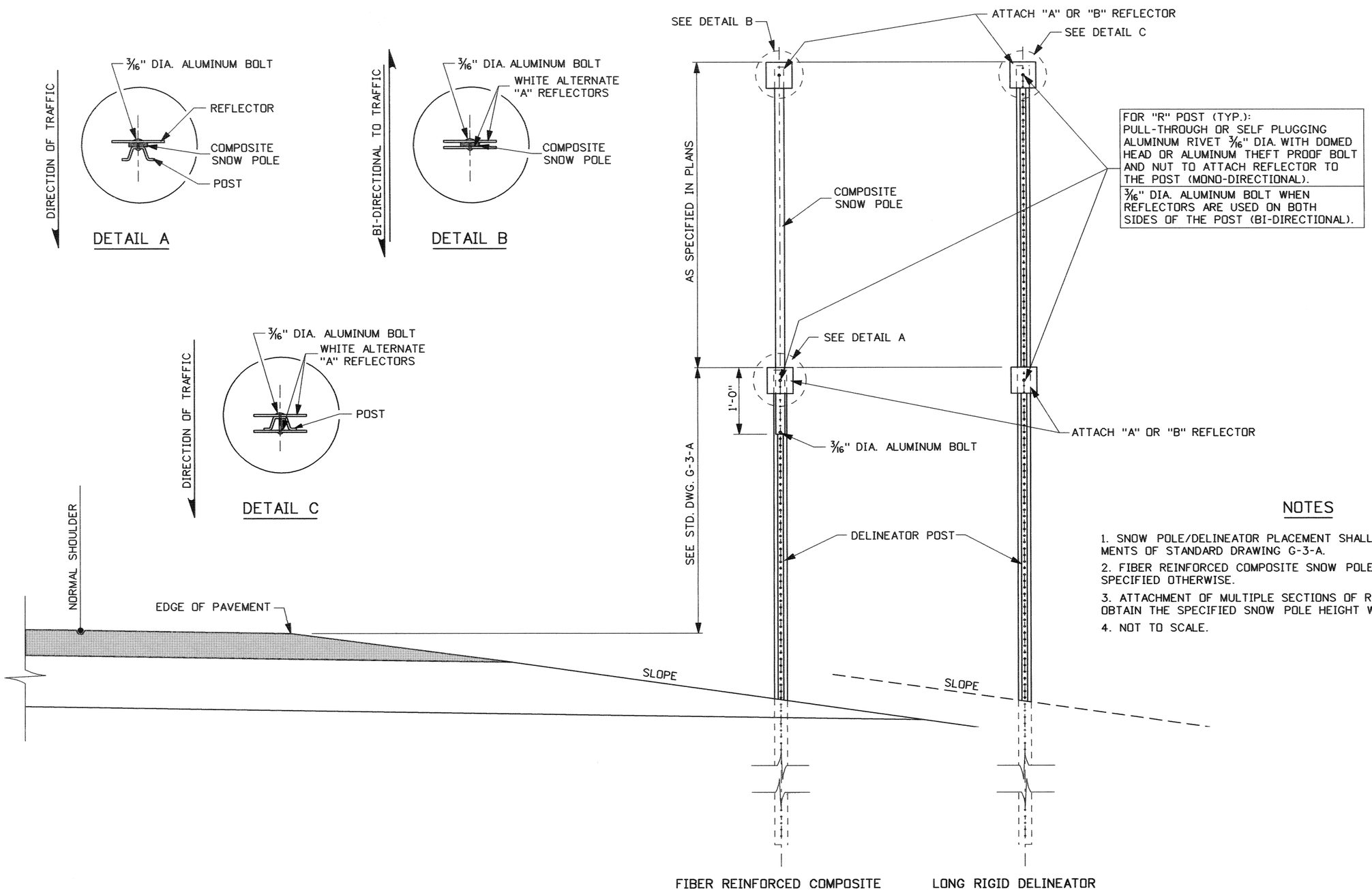

SNOW POLE INSTALLATION

NOTES

1. SNOW POLE/DELINEATOR PLACEMENT SHALL CONFORM TO THE REQUIREMENTS OF STANDARD DRAWING G-3-A.
2. FIBER REINFORCED COMPOSITE SNOW POLES SHALL BE ORANGE UNLESS SPECIFIED OTHERWISE.
3. ATTACHMENT OF MULTIPLE SECTIONS OF RIGID DELINEATOR POLES TO OBTAIN THE SPECIFIED SNOW POLE HEIGHT WILL NOT BE PERMITTED.
4. NOT TO SCALE.

REVISIONS

NO.	DATE	BY	NO.	DATE	BY	NO.	DATE	BY
1	9-80							
2	11-95	IJR						
3	12-02	MSM						
4	5-05	MSM						

SCALES SHOWN ARE FOR 11" X 17" PRINTS ONLY

CADD FILE NAME g3b_0505.std

DRWG. ORIG. DATE: MARCH, 1965

IDAHO TRANSPORTATION DEPARTMENT

BOISE IDAHO

ASSISTANT CHIEF ENGINEER (DEVELOPMENT)

CHIEF ENGINEER

STANDARD DRAWING

SNOW POLES

REQUIRES STD. DWG. G-3-A

English

STANDARD DRWG. NO.

G-3-B

SHEET 1 OF 1

PROFESSIONAL ENGINEER REGISTERED 6256 5-12-05 STATE OF IDAHO DAVID R. JONES

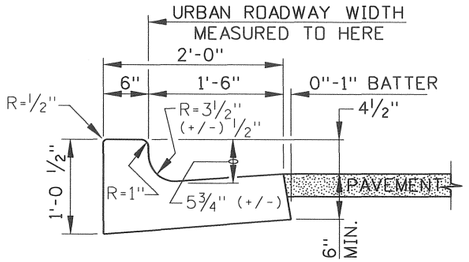

SECTION 2

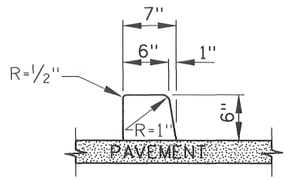

SECTION 3

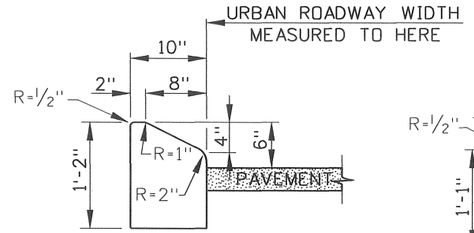

SECTION 4

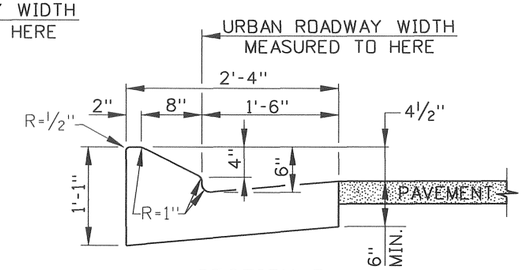

SECTION 5

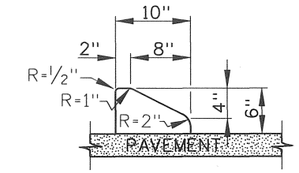

SECTION 6

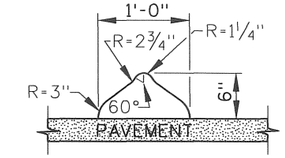

SECTION 7

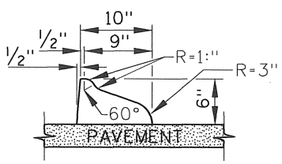

SECTION 8

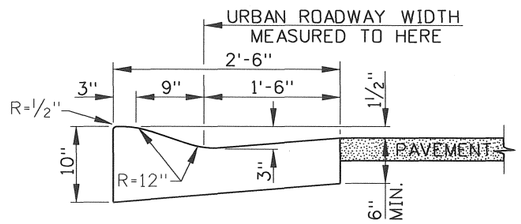

SECTION 9

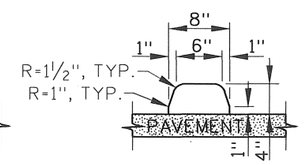

SECTION 10

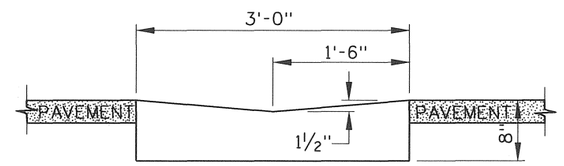

SECTION 11

NOTES

1. THERE SHALL BE FOUR TYPES OF CURB, GUTTER, AND TRAFFIC SEPARATORS AS FOLLOWS:

TYPE A SECTIONS SHALL BE CAST-IN-PLACE PORTLAND CEMENT CONCRETE.
TYPE B SECTIONS SHALL BE PRECAST PORTLAND CEMENT CONCRETE.
TYPE C SECTIONS SHALL BE EXTRUDED PORTLAND CEMENT CONCRETE.
TYPE D SECTIONS SHALL BE EXTRUDED ASPHALT CONCRETE.

2. WHERE DIFFERENT CURB SECTIONS CONNECT, PROVIDE A UNIFORM TRANSITION WITH A MINIMUM LENGTH OF 12 TIMES THE LARGEST VARIATION IN CURB DIMENSIONS.

3. WHEN CONCRETE CURBS OR TRAFFIC SEPARATORS ARE PLACED ON TOP OF BITUMINOUS PAVEMENT, A KEY APPROXIMATELY 1" DEEP BY 3" WIDE SHALL BE PLACED AT THE CENTERLINE OF THE SECTION FOR ITS ENTIRE LENGTH. WHEN PRECAST CONCRETE SECTIONS ARE PLACED ON THE PAVEMENT, A KEY APPROXIMATELY 1" DEEP BY 3" WIDE SHALL BE PROVIDED IN THE BOTTOM OF THE SECTION. WHEN BITUMINOUS SECTIONS ARE USED, NO KEY IN THE PAVEMENT WILL BE REQUIRED. CURB PIN DOWELS MAY BE PROVIDED AS AN ALTERNATIVE TO PROVIDING A KEY. THE DOWELS SHALL BE #6 DEFORMED REBAR AND SHALL BE INSTALLED AT A MAXIMUM SPACING OF 5'. THE DOWELS SHALL EXTEND 8" BELOW THE FINISHED PAVEMENT SURFACE AND 4" INTO THE CURB. FOR CURB SECTION 10, THE DOWELS SHALL EXTEND INTO THE CURB TO PROVIDE 1" OF COVER. PRECAST CONCRETE CURBS SHALL HAVE A MINIMUM LENGTH OF 6' WITH 2 DOWELS. ANY SECTION LONGER THAN 6' SHALL HAVE A MINIMUM OF 3 DOWELS. NO PRECAST CONCRETE SECTION SHALL EXCEED 10'.

4. PRECAST OR EXTRUDED CONCRETE CURB AND TRAFFIC SEPARATORS PLACED ON PORTLAND CEMENT SURFACES SHALL BE ATTACHED TO THE SURFACE WITH AN EPOXY BONDING AGENT. NO KEY WILL BE REQUIRED.

5. AT SPECIFIED LOCATIONS, A REQUIREMENT SUCH AS "CONSTRUCT TYPE A-2 CURB AND GUTTER" INDICATES TYPE A CONSTRUCTION AS DEFINED IN THE SPECIFICATIONS AND SECTION 2 AS SHOWN ON THIS DRAWING. A DESIGNATION SUCH AS "CONSTRUCT TYPE B-6 OR C-6 CURB" INDICATES THAT EITHER TYPE B OR TYPE C CONSTRUCTION, AS DEFINED IN THE SPECIFICATIONS, MAY BE USED TO CONSTRUCT SECTION 6.

6. THE TERMINUS ENDS OF CURBS SHALL BE TAPERED DOWN IN THE LAST 6' TO A MAXIMUM OF 1" THICKNESS AT THE EXPOSED END.

7. REFER TO STANDARD DRAWING R-2 WHEN TRANSITIONING AND FLATTENING CURB AND/OR CURB & GUTTER FOR A RAILROAD CROSSING.

8. REFER TO STANDARD DRAWING H-1-B FOR A.D.A. CURB AND GUTTER SECTIONS TO BE USED AT A.D.A. PEDESTRIAN RAMPS.

9. REFER TO STANDARD DRAWING H-1-B FOR AGGREGATE BASE THICKNESS REQUIRED BENEATH CURB AND/OR CURB AND GUTTER SECTIONS.

10. NOT TO SCALE.

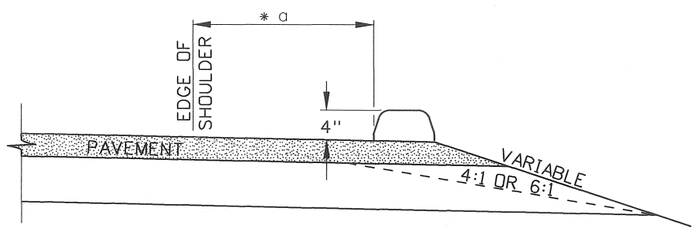

* a 1'-0" WHEN TYPICAL SECTION SPECIFIES 4:1 FORESLOPE
2'-0" WHEN TYPICAL SECTION SPECIFIES 6:1 FORESLOPE

TYPICAL CURB INSTALLATION

(WHEN USED IN CONJUNCTION WITH GUARDRAIL SEE STD. DWG G-1-A-1)

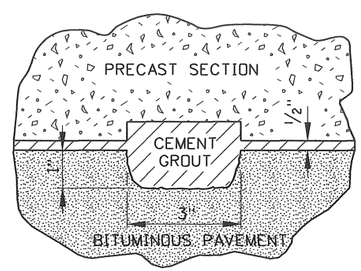

FOR CURB PLACED ON BITUMINOUS PAVEMENT

TYPICAL GROUT JOINT

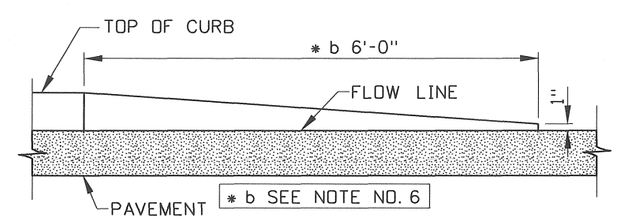

CURB TERMINUS

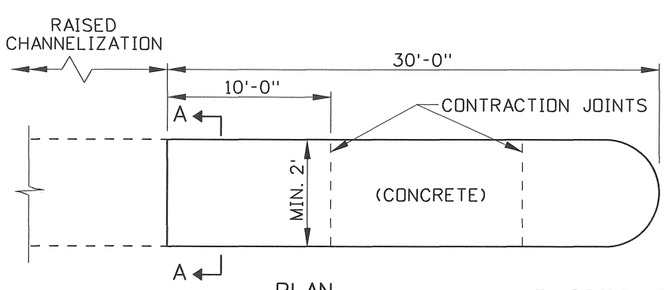

PLAN

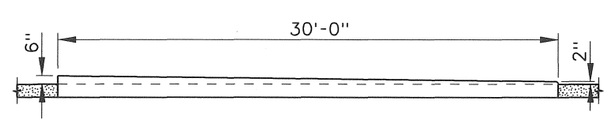

ELEVATION

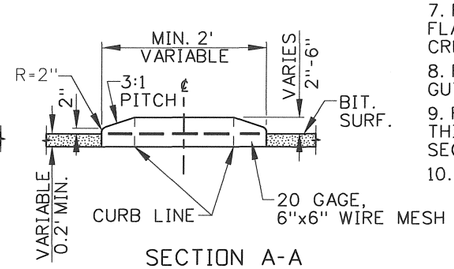

SECTION A-A

RAISED CHANNELIZATION END TREATMENT

REVISIONS								
NO.	DATE	BY	NO.	DATE	BY	NO.	DATE	BY
1	2-76		6	12-04	MSM			
2	12-90	GB	7	6-05	MSM			
3	9-93	MSM	8	7-10	JAW			
4	12-94	MSM						
5	12-01	MSM						

SCALES SHOWN ARE FOR 11" X 17" PRINTS ONLY

CADD FILE NAME: h1a_0910.std

DRAWING DATE: APRIL, 1961

IDAHO TRANSPORTATION DEPARTMENT

BOISE IDAHO

ASSISTANT CHIEF ENGINEER (DEVELOPMENT)

CHIEF ENGINEER

STANDARD DRAWING

CURBS, GUTTERS, TRAFFIC SEPARATORS, & RAISED CHANNELIZATION END TREATMENT

English

STANDARD DRAWING NO.

H-1-A

SHEET 1 OF 1

PROFESSIONAL ENGINEER REGISTERED 6506 9/22/2010 STATE OF IDAHO TED E. MASON

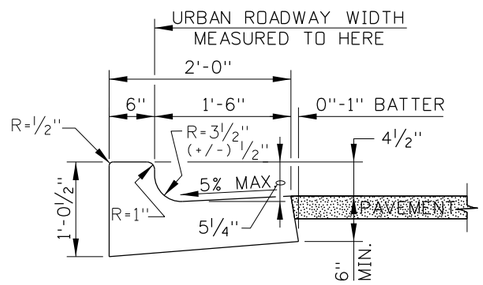

SECTION 2-A

GUTTER PAN SLOPE REDUCED
FOR A.D.A. RAMP

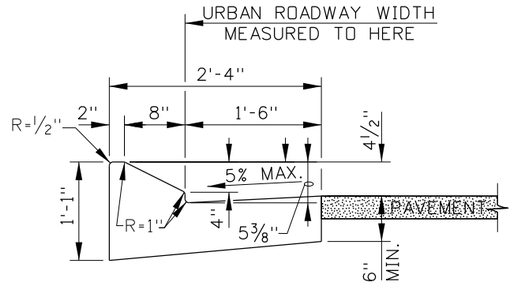

SECTION 5-A

GUTTER PAN SLOPE REDUCED
FOR A.D.A. RAMP

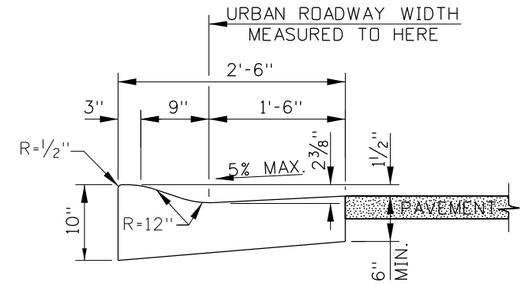

SECTION 9-A

GUTTER PAN SLOPE REDUCED
FOR A.D.A. RAMP

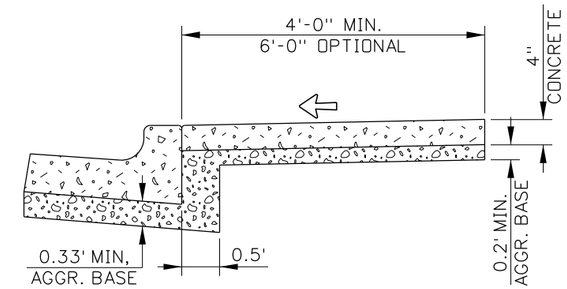

ATTACHED CONCRETE SIDEWALK

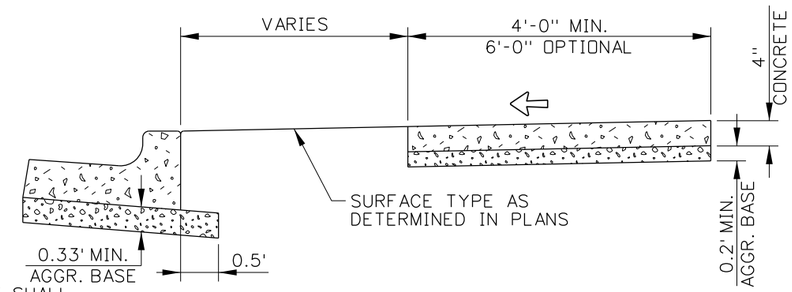

DETACHED CONCRETE SIDEWALK

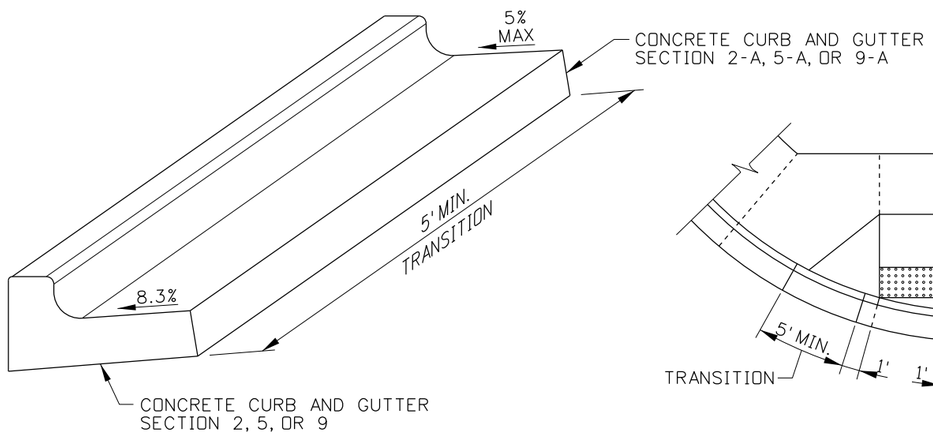

ISOMETRIC VIEW

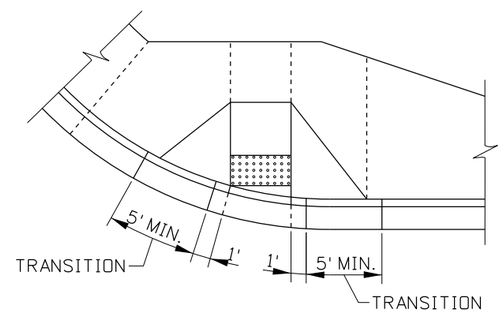

PLAN

CURB AND GUTTER TRANSITION AT A.D.A. PEDESTRIAN RAMP DETAIL

SIDEWALK NOTES

1. AN APPROVED BOND PREVENTIVE SHALL BE PROVIDED BETWEEN THE SIDEWALK AND CURB WHEN PLACED ADJACENT TO EACH OTHER. WHEN CONSTRUCTING NEW SIDEWALK ADJACENT TO EXISTING CURB OR SIDEWALK, THE NEW JOINTS SHALL FALL IN THE SAME SEQUENCE AS THE EXISTING.
2. A PREFORMED EXPANSION JOINT FILLER SHALL BE PLACED IN THE SIDEWALK AND NOT THE CURB RAMP CONSTRUCTION. EXPANSION JOINT FILLER SHALL BE PLACED EVERY 40' FOR NEW SIDEWALK CONSTRUCTION.
3. SIDEWALK CONSTRUCTION JOINTS SHALL BE CONSTRUCTED AT 5' SPACING, APPROXIMATELY 1/8" WIDE, 3/4" IN DEPTH, AND FINISHED AND EDGED SMOOTH.
4. COMBINATION CURB AND GUTTER SECTION 2 IS SHOWN IN THE DRAWING DETAILS. FOR OTHER CURB TYPES, REFER TO STD. DWG. H-1-A (CURBS, GUTTERS, TRAFFIC SEPARATORS, AND RAISED CHANNELIZATION END TREATMENT).
5. SIDEWALKS IN PEDESTRIAN ACCESS ROUTES THAT ARE LESS THAN 5.0' IN CLEAR WIDTH SHALL PROVIDE PASSING SPACES AT INTERVALS OF 200' MAXIMUM. PEDESTRIAN ACCESS ROUTES AT PASSING SPACES SHALL BE 5.0' WIDE FOR A DISTANCE OF 5.0' MIN.

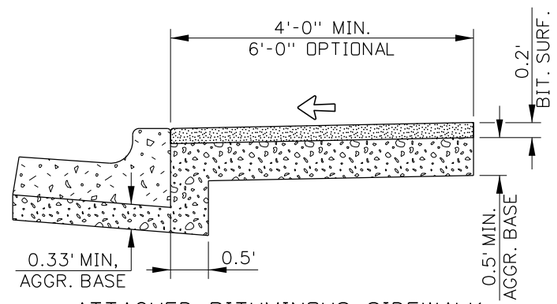

ATTACHED BITUMINOUS SIDEWALK

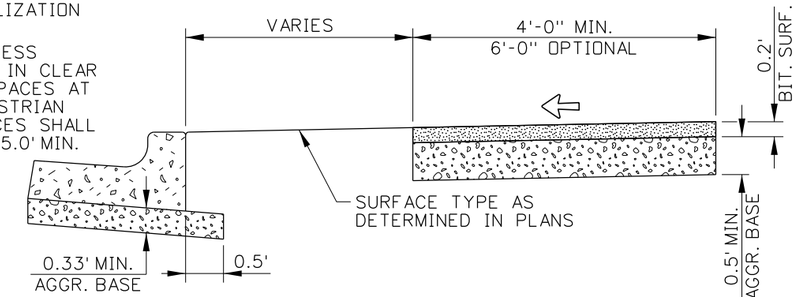

DETACHED BITUMINOUS SIDEWALK

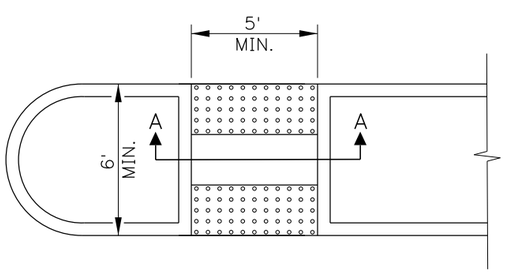

PLAN

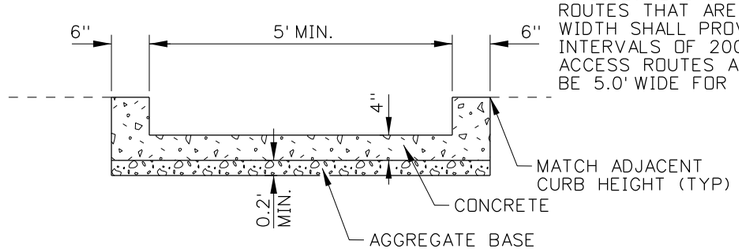

SECTION A-A

MEDIAN ISLAND DETAIL

LEGEND

⇦ 1.5% ± 0.5% (2% MAX) SLOPE

ORIGINAL STORED
AT: ITD,
Headquarters
3311 West State
Boise, Idaho

ORIGINAL SIGNED BY:
RYAN SCOT CARNIE
DATE ORIGINAL SIGNED:
AUGUST 26, 2011

REVISIONS								
NO.	DATE	BY	NO.	DATE	BY	NO.	DATE	BY
1	8-11	RSC						

SCALES SHOWN ARE FOR 11" X 17" PRINTS ONLY

CADD FILE NAME: h1b_0811.std

DRAWING DATE: JULY, 2010

IDAHO TRANSPORTATION DEPARTMENT

BOISE IDAHO

ORIGINAL SIGN BY: LOREN THOMAS
HIGHWAYS PROGRAM OVERSIGHT ENGINEER
ORIGINAL SIGN BY: TOM COLE
CHIEF ENGINEER

STANDARD DRAWING

SIDEWALKS, ISLANDS, AND A.D.A. CURB & GUTTERS

English

STANDARD DRAWING NO.

H-1-B

SHEET 1 OF 1

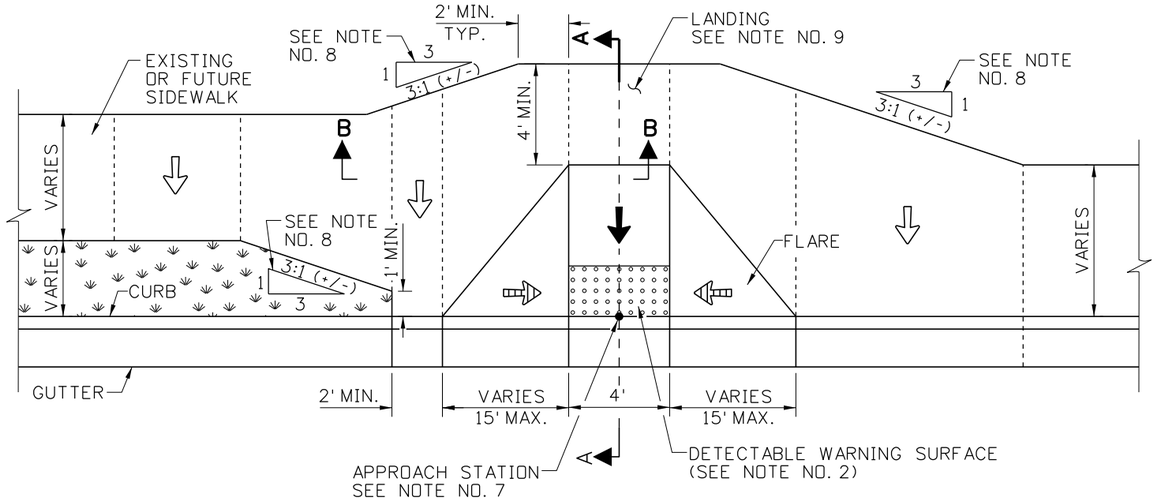

PLAN

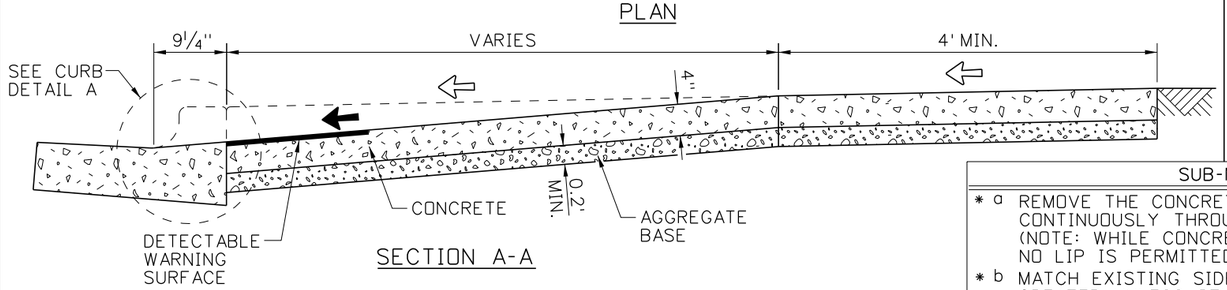

SECTION A-A

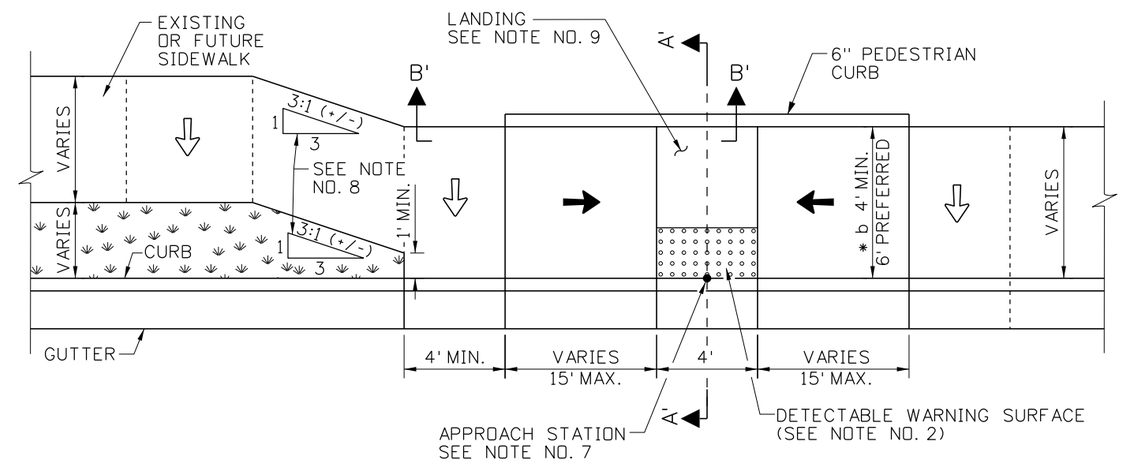

PLAN

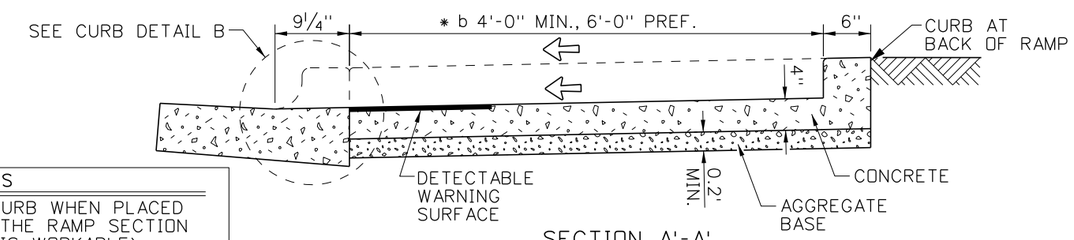

SECTION A'-A'

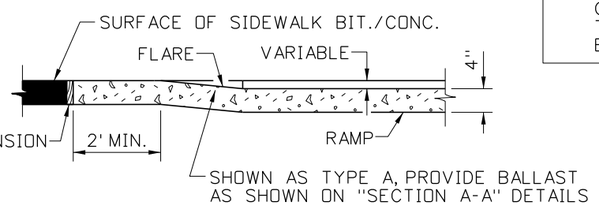

SECTION B-B

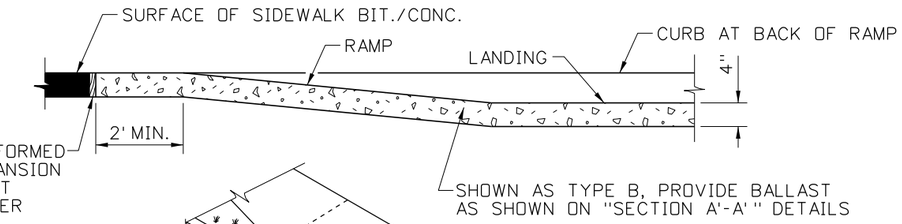

SECTION B'-B'

SUB-NOTES

- * a REMOVE THE CONCRETE CURB WHEN PLACED CONTINUOUSLY THROUGH THE RAMP SECTION (NOTE: WHILE CONCRETE IS WORKABLE). NO LIP IS PERMITTED IN THE RAMP.
- * b MATCH EXISTING SIDEWALK WIDTHS OF 4' OR GREATER, UNLESS OTHERWISE NOTED. TRANSITION TO A MINIMUM OF 4' WIDTH WHERE EXISTING SIDEWALK WIDTHS ARE LESS THAN 4'.

LEGEND

- 1.5% ± 0.5% (2% MAX) SLOPE
- 7.3% ± 1.0% (8.3% MAX) SLOPE (SEE NOTE 14)
- 9.0% ± 1.0% (10.0% MAX) SLOPE

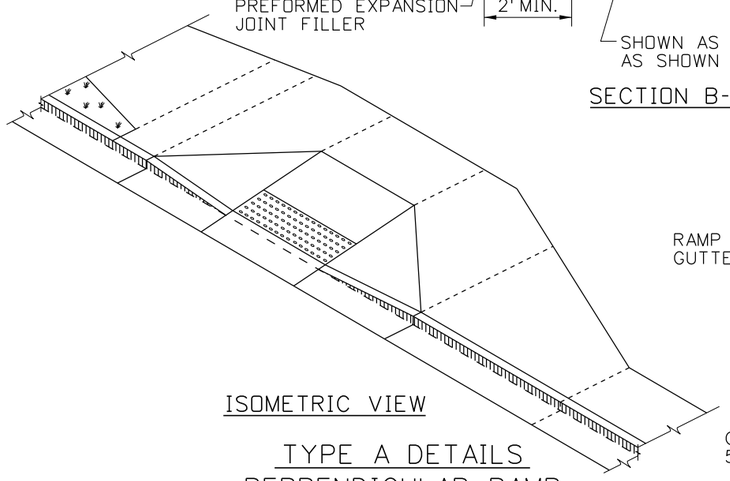

ISOMETRIC VIEW

TYPE A DETAILS
PERPENDICULAR RAMP

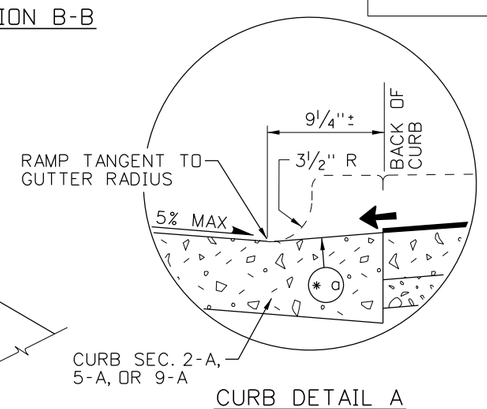

CURB DETAIL A

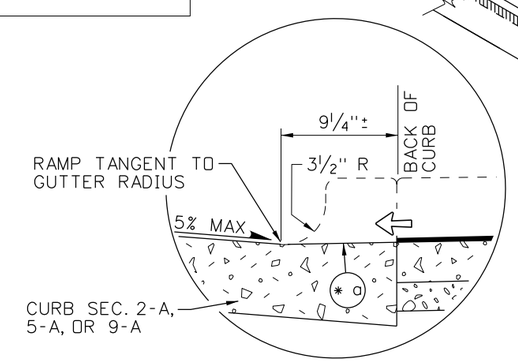

CURB DETAIL B

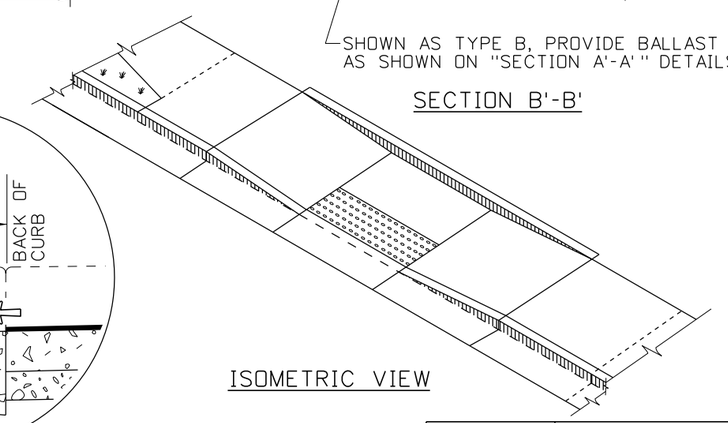

ISOMETRIC VIEW

TYPE B DETAILS
PARALLEL RAMP

ORIGINAL STORED AT: ITD, Headquarters 3311 West State Boise, Idaho

ORIGINAL SIGNED BY: TED E. MASON DATE ORIGINAL SIGNED: OCTOBER 5, 2011

REVISIONS								
NO.	DATE	BY	NO.	DATE	BY	NO.	DATE	BY
1	9-93	MSM	6	7-03	MSM	11	7-10	JAW
2	12-95	MSM	7	12-04	MSM	12	9-11	TEM
3	6-98	MSM	8	6-05	MSM			
4	8-01	MSM	9	5-06	MSM			
5	10-02	MSM	10	5-07	MSM			

SCALES SHOWN ARE FOR 11" X 17" PRINTS ONLY

CADD FILE NAME: h2a_0911.std

DRAWING DATE: JUNE, 1990

IDAHO TRANSPORTATION DEPARTMENT

BOISE IDAHO

ORIGINAL SIGN BY: LOREN THOMAS
HIGHWAYS PROGRAM OVERSIGHT ENGINEER

ORIGINAL SIGN BY: TOM COLE
CHIEF ENGINEER

STANDARD DRAWING

SIDEWALKS & A.D.A. FACILITIES: NEW CONSTRUCTION

REQUIRES SHEET 2 OF 4, 3 OF 4, 4 OF 4 & STD. DWG. H-3

English

STANDARD DRAWING NO.

H-2-A

SHEET 1 OF 4

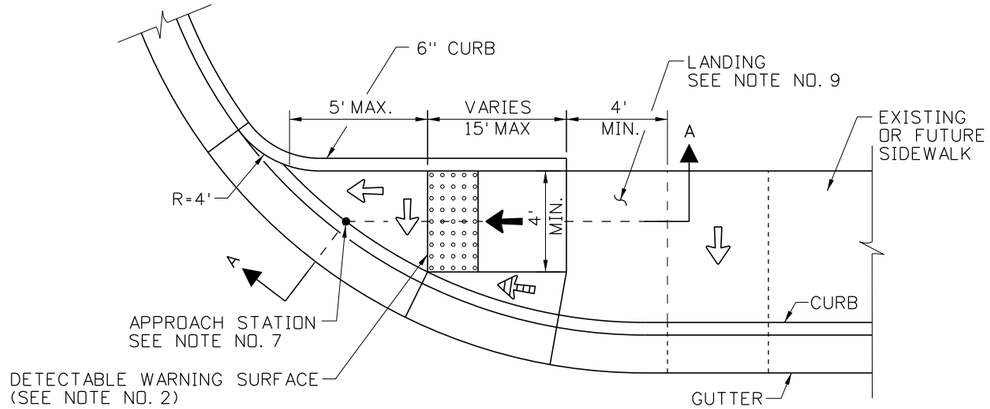

PLAN

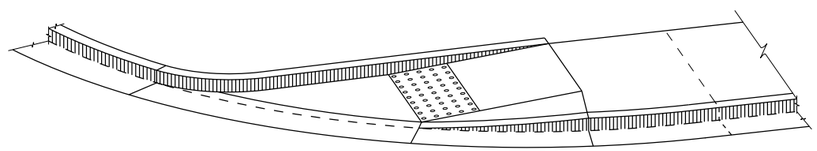

ISOMETRIC VIEW

TYPE C1 DETAILS
SKEWED RAMP WITH CURB AND FLARE

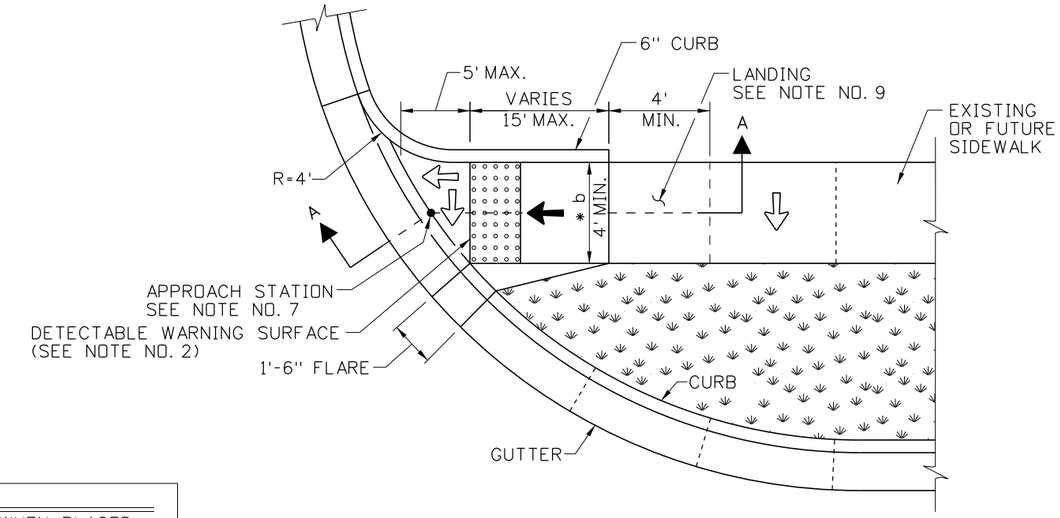

PLAN

SUB-NOTES

* a REMOVE THE CONCRETE CURB WHEN PLACED CONTINUOUSLY THROUGH THE RAMP SECTION (NOTE: WHILE CONCRETE IS WORKABLE). NO LIP IS PERMITTED IN THE RAMP.

* b MATCH EXISTING SIDEWALK WIDTHS OF 4' OR GREATER, UNLESS OTHERWISE NOTED. TRANSITION TO A MINIMUM OF 4' WIDTH WHERE EXISTING SIDEWALK WIDTHS ARE LESS THAN 4'.

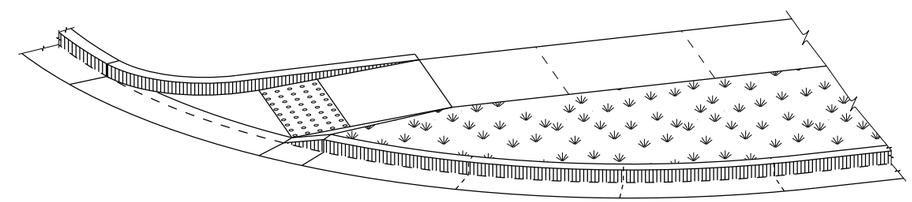

ISOMETRIC VIEW

TYPE C2 DETAILS
SKEWED RAMP WITH CURB AND FLARE

LEGEND

1.5% ± 0.5% (2% MAX) SLOPE
7.3% ± 1.0% (8.3% MAX) SLOPE (SEE NOTE 14)
9.0% ± 1.0% (10.0% MAX) SLOPE

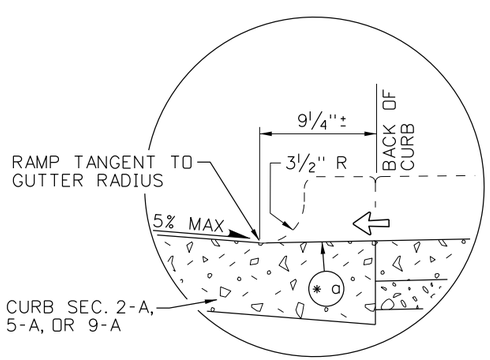

CURB DETAIL B

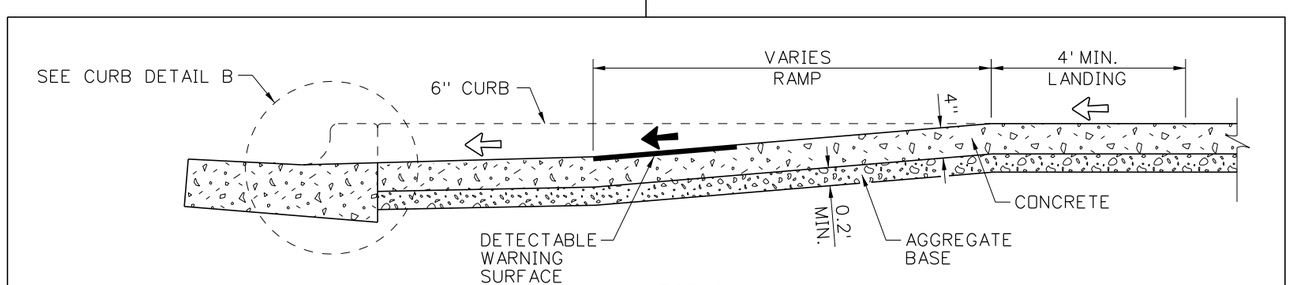

SECTION A-A

ORIGINAL STORED AT: ITD, Headquarters 3311 West State Boise, Idaho

ORIGINAL SIGNED BY: TED E. MASON
DATE ORIGINAL SIGNED: OCTOBER 5, 2011

REVISIONS								
NO.	DATE	BY	NO.	DATE	BY	NO.	DATE	BY
1	9-93	MSM	6	7-03	MSM	11	7-10	JAW
2	12-95	MSM	7	12-04	MSM	12	9-11	TEM
3	6-98	MSM	8	6-05	MSM			
4	8-01	MSM	9	5-06	MSM			
5	10-02	MSM	10	5-07	MSM			

SCALES SHOWN ARE FOR 11" X 17" PRINTS ONLY

CADD FILE NAME: h2a_0911.std

DRAWING DATE: JUNE, 1990

IDAHO TRANSPORTATION DEPARTMENT

BOISE IDAHO

ORIGINAL SIGN BY: LOREN THOMAS
HIGHWAYS PROGRAM OVERSIGHT ENGINEER

ORIGINAL SIGN BY: TOM COLE
CHIEF ENGINEER

STANDARD DRAWING

SIDEWALKS & A.D.A. FACILITIES: NEW CONSTRUCTION

REQUIRES SHEET 1 OF 4, 3 OF 4, 4 OF 4 & STD. DWG. H-3

English

STANDARD DRAWING NO.

H-2-A

SHEET 2 OF 4

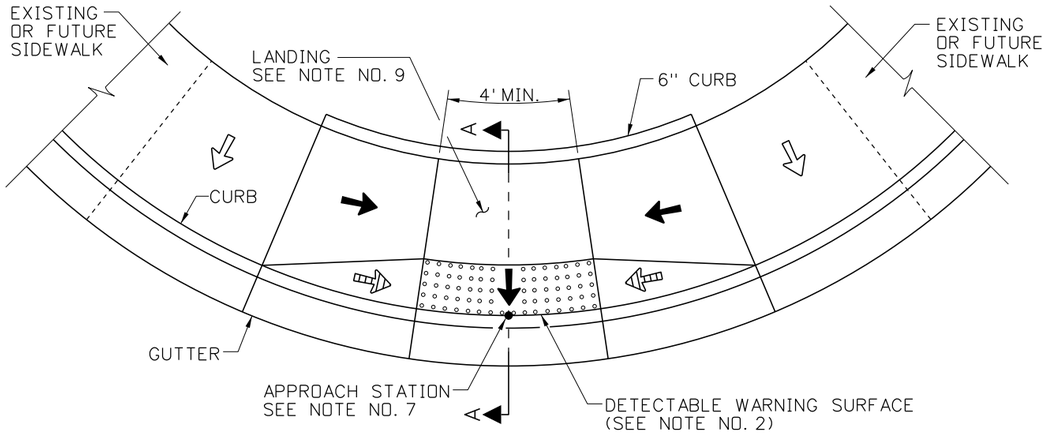

PLAN

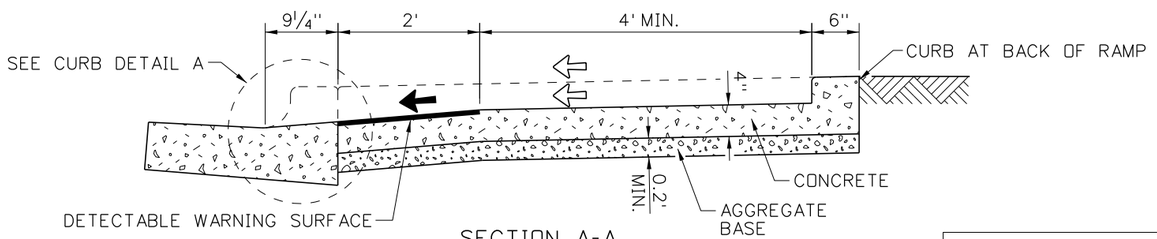

SECTION A-A

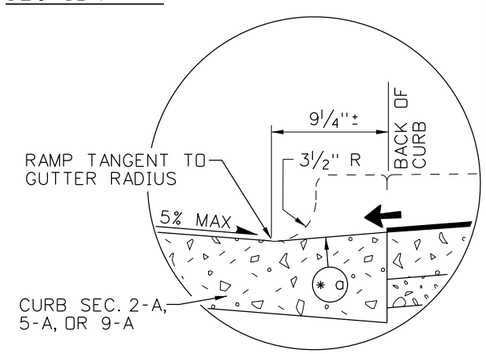

CURB DETAIL A

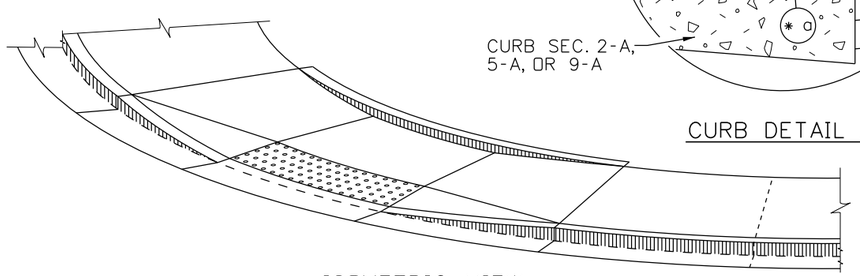

ISOMETRIC VIEW

TYPE D DETAILS
COMBINATION RAMP

SUB-NOTES
*a REMOVE THE CONCRETE CURB WHEN PLACED CONTINUOUSLY THROUGH THE RAMP SECTION (NOTE: WHILE CONCRETE IS WORKABLE). NO LIP IS PERMITTED IN THE RAMP.
*b MATCH EXISTING SIDEWALK WIDTHS OF 4' OR GREATER, UNLESS OTHERWISE NOTED. TRANSITION TO A MINIMUM OF 4' WIDTH WHERE EXISTING SIDEWALK WIDTHS ARE LESS THAN 4'.

LEGEND

- 1.5% ± 0.5% (2% MAX) SLOPE
- 7.3% ± 1.0% (8.3% MAX) SLOPE (SEE NOTE 14)
- 9.0% ± 1.0% (10.0% MAX) SLOPE

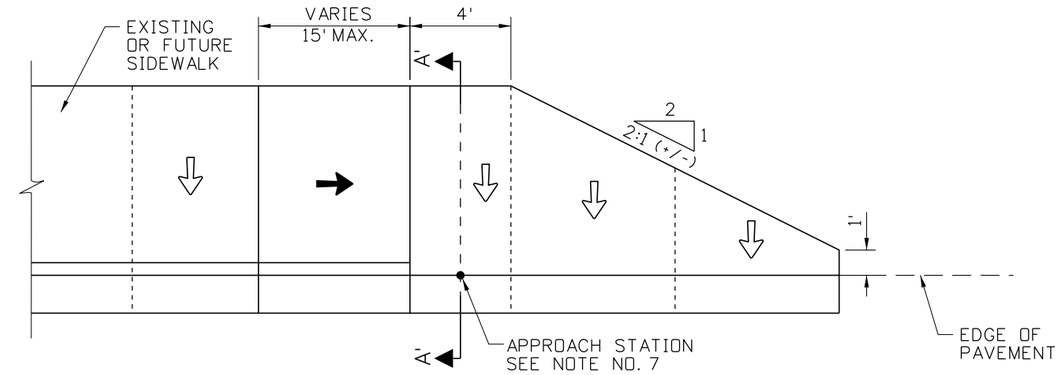

PLAN

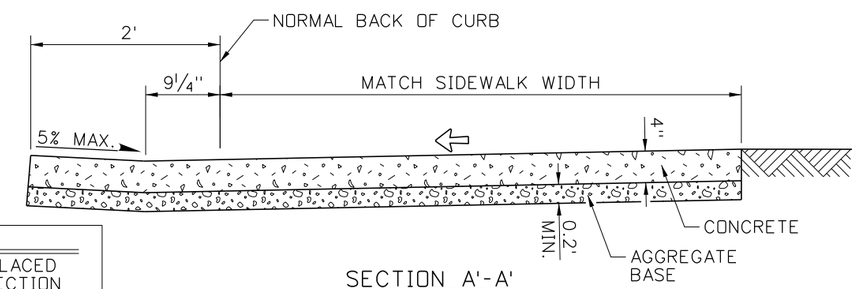

SECTION A'-A'

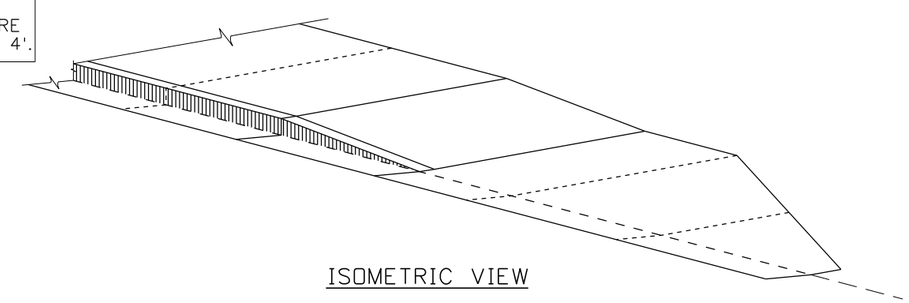

ISOMETRIC VIEW

TYPE E DETAILS
SIDEWALK TERMINATION RAMP

ORIGINAL STORED AT: ITD, Headquarters 3311 West State Boise, Idaho

ORIGINAL SIGNED BY: TED E. MASON DATE ORIGINAL SIGNED: OCTOBER 5, 2011

REVISIONS								
NO.	DATE	BY	NO.	DATE	BY	NO.	DATE	BY
1	9-93	MSM	6	7-03	MSM	11	7-10	JAW
2	12-95	MSM	7	12-04	MSM	12	9-11	TEM
3	6-98	MSM	8	6-05	MSM			
4	8-01	MSM	9	5-06	MSM			
5	10-02	MSM	10	5-07	MSM			

SCALES SHOWN ARE FOR 11" X 17" PRINTS ONLY

CADD FILE NAME: h2a_0911.std

DRAWING DATE: JUNE, 1990

IDAHO TRANSPORTATION DEPARTMENT

BOISE IDAHO

ORIGINAL SIGN BY: LOREN THOMAS
HIGHWAYS PROGRAM OVERSIGHT ENGINEER

ORIGINAL SIGN BY: TOM COLE
CHIEF ENGINEER

STANDARD DRAWING

SIDEWALKS & A.D.A. FACILITIES: NEW CONSTRUCTION

REQUIRES SHEET 1 OF 4, 2 OF 4, 4 OF 4 & STD. DWG. H-3

English

STANDARD DRAWING NO.

H-2-A

SHEET 3 OF 4

SUB-NOTES
* c TRUNCATED DOME SPACING MAY VARY 1.6" TO 2.4", BUT THE UP-DOWN SPACING SHALL EQUAL THE LEFT-RIGHT SPACING.

LEGEND

- 1.5% ± 0.5% (2% MAX) SLOPE
- 7.3% ± 1.0% (8.3% MAX) SLOPE (SEE NOTE 14)
- 9.0% ± 1.0% (10.0% MAX) SLOPE

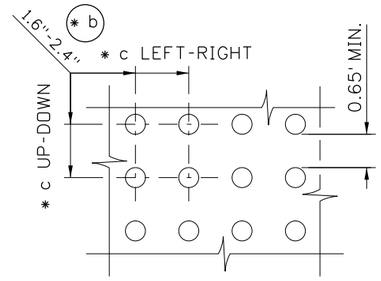

DOME SPACING

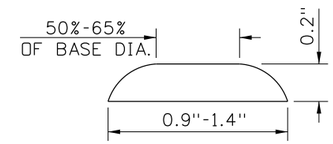

DOME DIMENSIONS

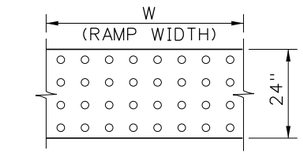

RAMP INSTALLATION

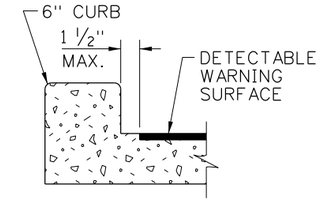

SECTION A-A

DETECTABLE WARNING SURFACE PLACEMENT ADJACENT TO RETURN CURBS

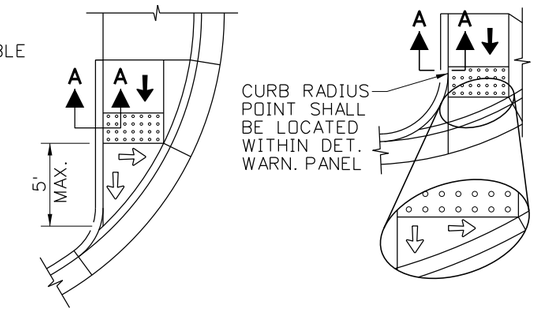

SKEWED RAMP INSTALLATION

DETECTABLE WARNING SURFACE DETAILS

TRUNCATED DOMES
(SEE NOTE NO. 2)

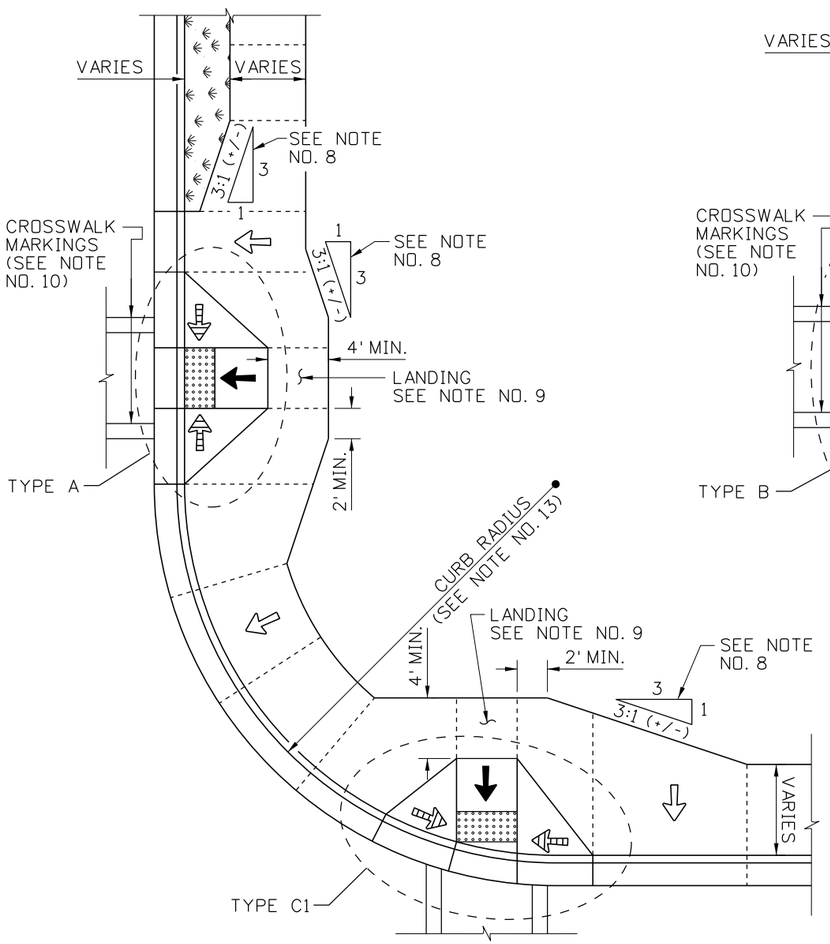

LAYOUT OPTIONS: RAMP TYPES A & C

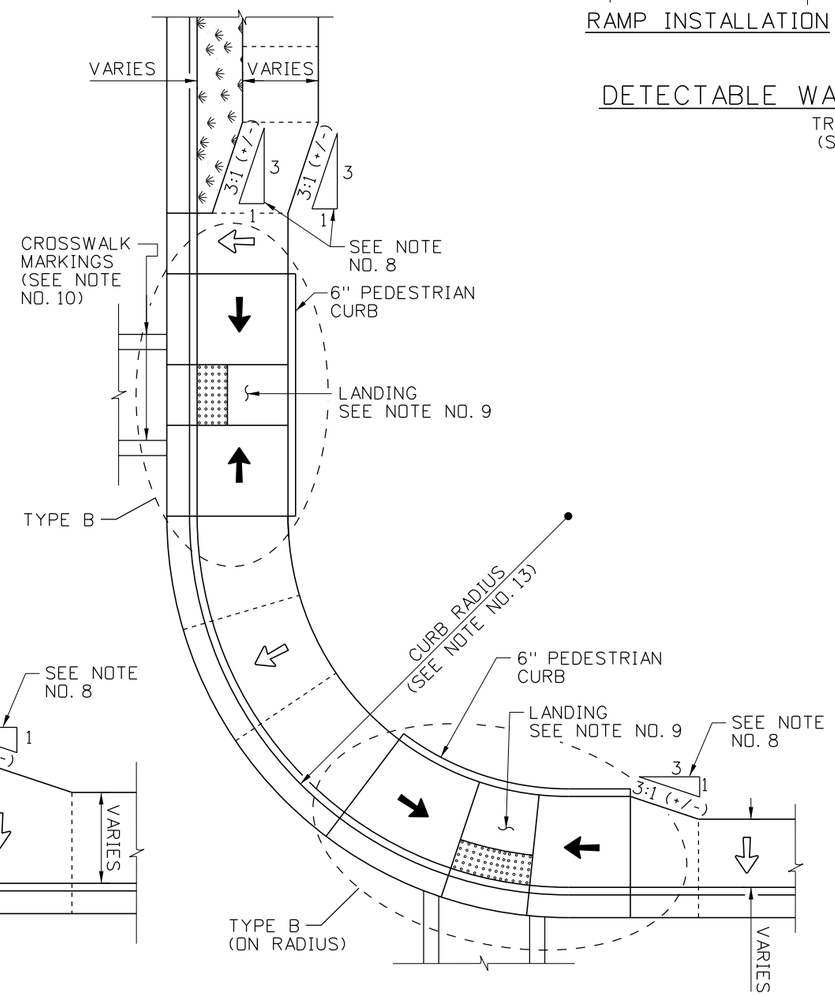

LAYOUT OPTIONS: RAMP TYPE B

GENERAL NOTES

1. TYPE A & B RAMPS SHALL NOT BE SKEWED AND THE RAMP AXIS SHALL BE PERPENDICULAR TO THE CURB LINE.
2. THE DETECTABLE WARNING SURFACE SHALL BE INSTALLED 24" DEEP ALONG THE FULL WIDTH OF THE PEDESTRIAN RAMP. AT LEAST ONE CORNER OF THE LEADING EDGE OF THE DETECTABLE WARNING SURFACE SHALL BE NO MORE THAN 8" FROM FLOW LINE OR NORMAL FACE OF CURB. THE DETECTABLE WARNING SURFACE SHALL BE SELECTED FROM THE IDAHO TRANSPORTATION DEPARTMENT'S QUALIFIED PRODUCTS LIST AND INSTALLED BY A MANUFACTURER'S TRAINED CRAFTSMAN. STAMPED CONCRETE DOMES ARE NOT ALLOWED.
3. RAMPS SHALL NOT HAVE ANY UTILITIES OR STRUCTURES WITHIN THE FLARE(S), RAMP(S), OR LANDING(S).
4. FINISH CONCRETE WITH A COARSE BROOM SURFACE PERPENDICULAR TO THE SLOPE IN RAMP, LANDING, AND FLARE AREAS.
5. PLACE PREFORMED EXPANSION JOINT FILLER BETWEEN URBAN APPROACH CONSTRUCTION AND OTHER CONCRETE POURS. REFER TO STD. DWG. H-1-B FOR DETAILS ON SIDEWALK CONSTRUCTION ADJACENT TO THE APPROACH.
6. CORNER CURB RADII, PEDESTRIAN TRAFFIC, AND VEHICLE TRAFFIC NEEDS MUST BE ADDRESSED WHEN INSTALLING CROSSWALKS FOR URBAN APPROACHES AT INTERSECTIONS.
7. AN APPROACH DESCRIPTION AS SHOWN ON THE PLANS, SHOULD INCLUDE A STATION, AN OFFSET (RIGHT OR LEFT) TO BACK OF CURB, AND THE WIDTH, "W", OF THE APPROACH.
8. USE A MINIMUM 3:1 (+/-) OR AN AESTHETICALLY PLEASING TAPER IN FROM THE EDGE OF NEW OR EXISTING SIDEWALK TO THE BACK OF THE RAMP OR LANDING AREAS.
9. LANDINGS SHALL HAVE ABSOLUTE MINIMUM DIMENSIONS OF 4' x 4' AND ABSOLUTE MAXIMUM SLOPES OF 2% IN ALL DIRECTIONS.
10. RAMPS SHALL NOT HAVE A CATCH BASIN OR DROP INLET WITHIN 4' OF A TYPE B OR E RAMP OR WITHIN 2' OF A TYPE A, C1, C2, OR D RAMP.
11. GRADE BREAKS SHALL BE ANGULAR AND DISTINCT.
12. REFER TO THE "MANUAL ON UNIFORM TRAFFIC CONTROL DEVICES" (MUTCD) FOR PLACEMENT OF APPROACH CROSSWALK MARKINGS AND VEHICLE STOP BARS.
13. REFER TO AASHTO "A POLICY ON GEOMETRIC DESIGN OF HIGHWAYS AND STREETS" FOR CURB RADII AND APPROACH GEOMETRIC REQUIREMENTS.
14. LIMIT CROSS SLOPES ON RAMPS TO A MAXIMUM OF 2%.
15. NOT TO SCALE.

ORIGINAL STORED AT: ITD, Headquarters 3311 West State Boise, Idaho

ORIGINAL SIGNED BY: TED E. MASON DATE ORIGINAL SIGNED: OCTOBER 5, 2011

REVISIONS

NO.	DATE	BY	NO.	DATE	BY	NO.	DATE	BY
1	9-93	MSM	6	7-03	MSM	11	7-10	JAW
2	12-95	MSM	7	12-04	MSM	12	9-11	TEM
3	6-98	MSM	8	6-05	MSM			
4	8-01	MSM	9	5-06	MSM			
5	10-02	MSM	10	5-07	MSM			

SCALES SHOWN ARE FOR 11" X 17" PRINTS ONLY

CADD FILE NAME: h2a_0911.std

DRAWING DATE: JUNE, 1990

IDAHO TRANSPORTATION DEPARTMENT

BOISE IDAHO

ORIGINAL SIGN BY: LOREN THOMAS
HIGHWAYS PROGRAM OVERSIGHT ENGINEER
ORIGINAL SIGN BY: TOM COLE
CHIEF ENGINEER

STANDARD DRAWING

SIDEWALKS & A.D.A. FACILITIES: NEW CONSTRUCTION

REQUIRES SHEET 1 OF 4, 2 OF 4, 3 OF 4 & STD. DWG. H-3

English

STANDARD DRAWING NO. H-2-A

SHEET 4 OF 4

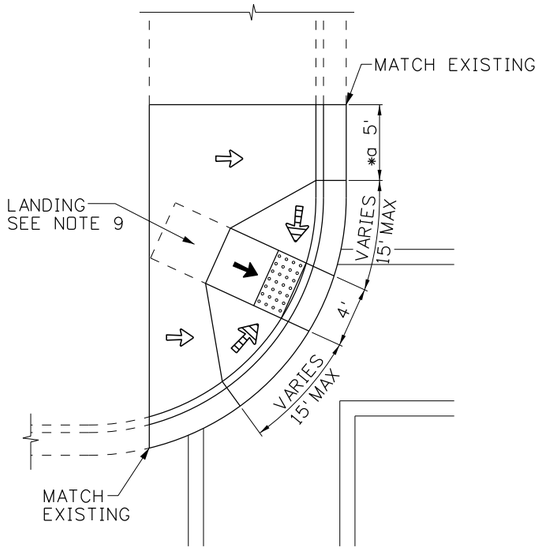

SEE NOTE 13

TYPE R-A1

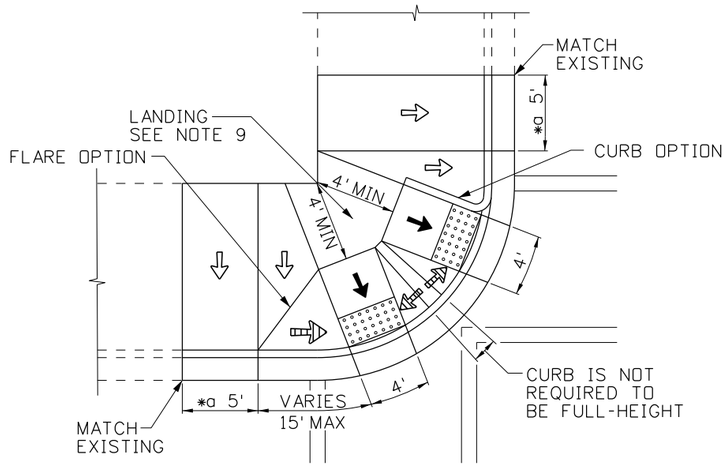

TYPE R-A2

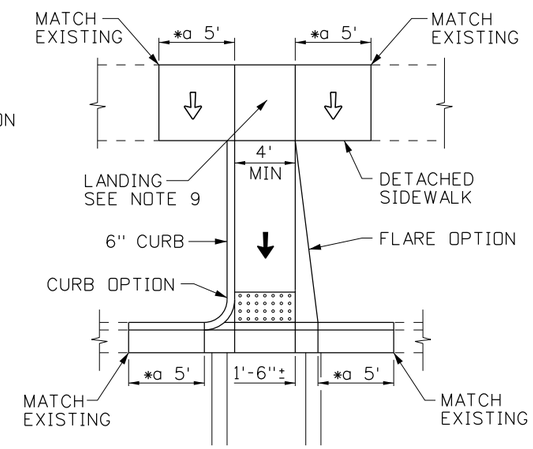

TYPE R-A3

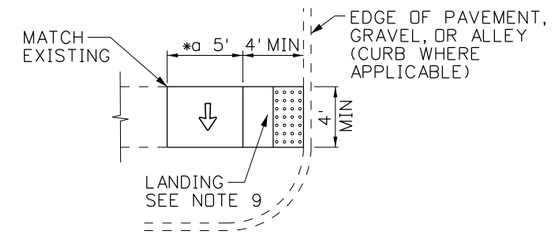

TYPE R-A4

SUB-NOTES
* a SEE NOTE 8
* b 6' MIN, BUT NOT LESS THAN THE RADIUS OR THE WIDTH OF THE SIDEWALK, WHICHEVER IS GREATER

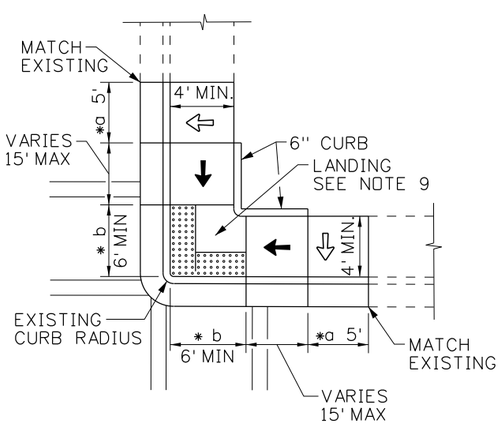

TYPE R-B1

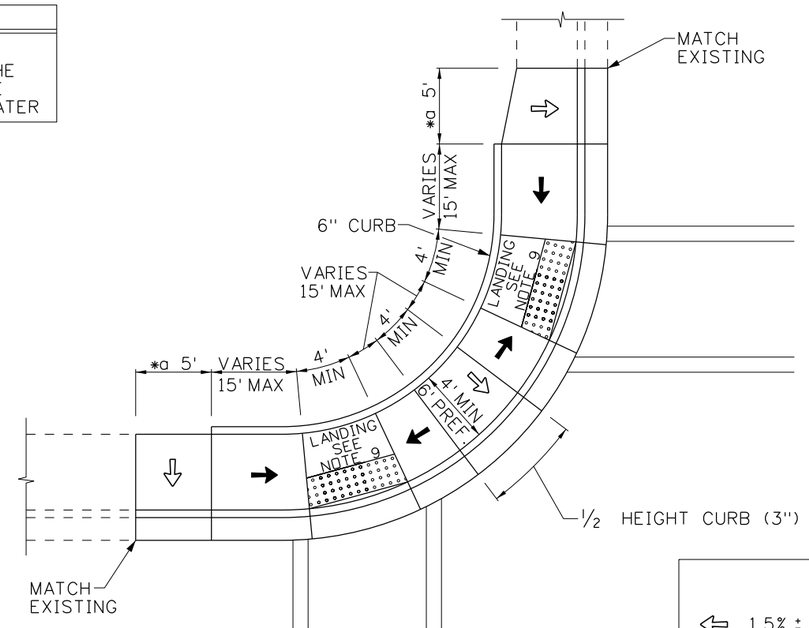

TYPE R-B2

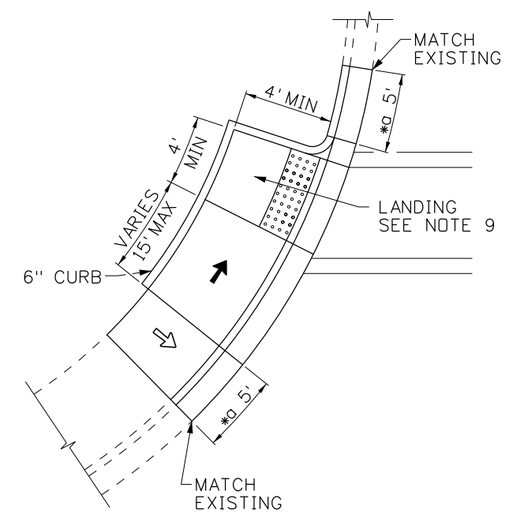

TYPE R-B3

LEGEND	
⇦	1.5% ± 0.5% (2% MAX) SLOPE
←	7.3% ± 1.0% (8.3% MAX) SLOPE (SEE NOTE 16)
⇦	9.0% ± 1.0% (10.0% MAX) SLOPE

ORIGINAL STORED AT: ITD, Headquarters 3311 West State Boise, Idaho

ORIGINAL SIGNED BY: TED E. MASON
DATE ORIGINAL SIGNED: NOVEMBER 23, 2011

REVISIONS								
NO.	DATE	BY	NO.	DATE	BY	NO.	DATE	BY
1	9-11	TEM						

SCALES SHOWN ARE FOR 11" X 17" PRINTS ONLY

CADD FILE NAME: h2b_0911.std

DRAWING DATE: JULY, 2010

IDAHO TRANSPORTATION DEPARTMENT

BOISE IDAHO

ORIGINAL SIGN BY: LOREN THOMAS
HIGHWAYS PROGRAM OVERSIGHT ENGINEER
ORIGINAL SIGN BY: TOM COLE
CHIEF ENGINEER

STANDARD DRAWING

SIDEWALKS & A.D.A. FACILITIES: RETROFIT APPLICATIONS

REQUIRES SHEET 2 OF 4, 3 OF 4, 4 OF 4

English

STANDARD DRAWING NO.

H-2-B

SHEET 1 OF 4

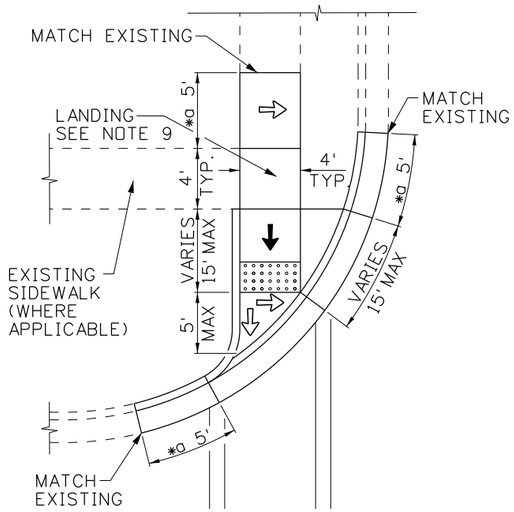

TYPE R-C1

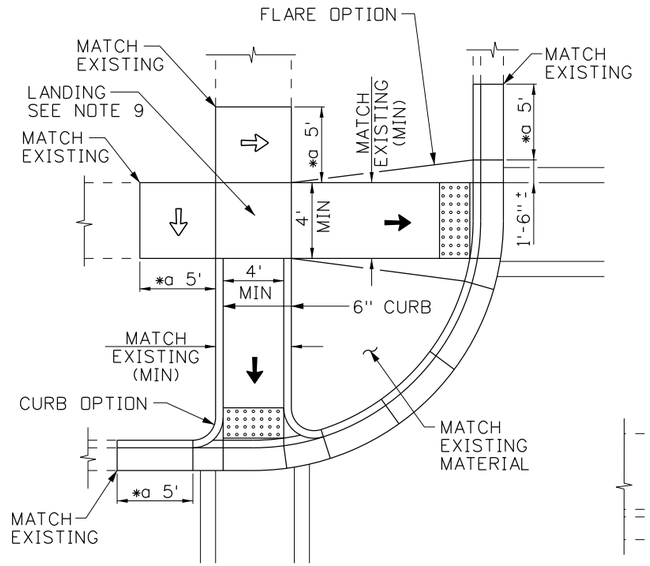

TYPE R-C2

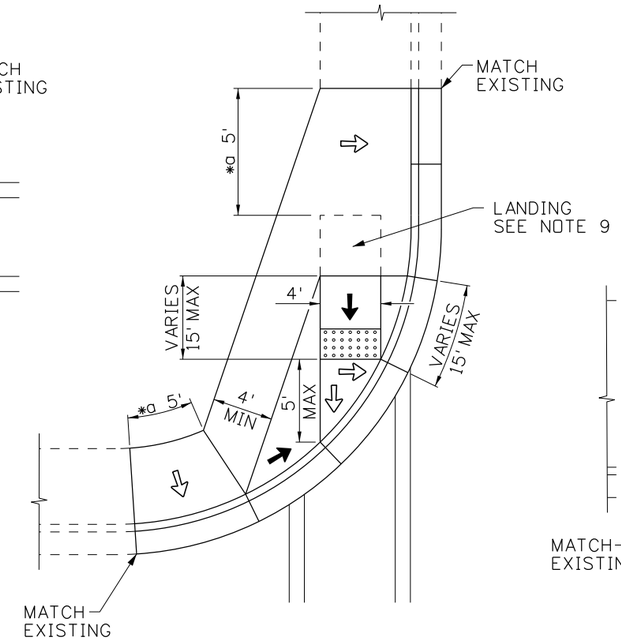

TYPE R-C3

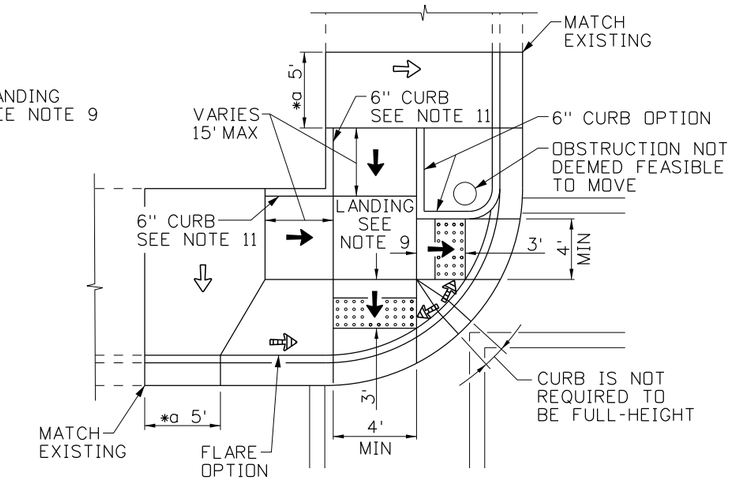

TYPE R-D1

SUB-NOTES
* a SEE NOTE 8
* b 6' MIN, BUT NOT LESS THAN THE RADIUS OR THE WIDTH OF THE SIDEWALK, WHICHEVER IS GREATER

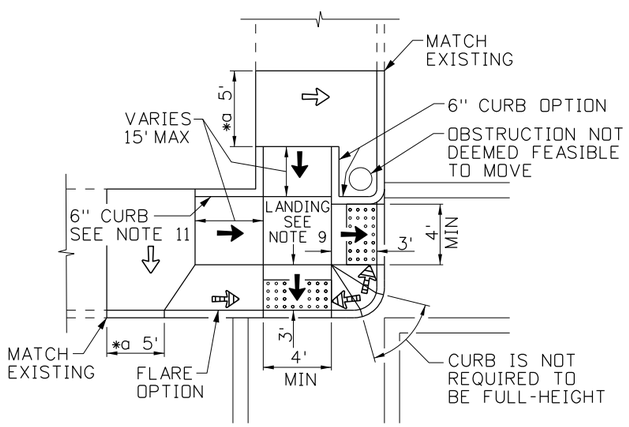

TYPE R-D2

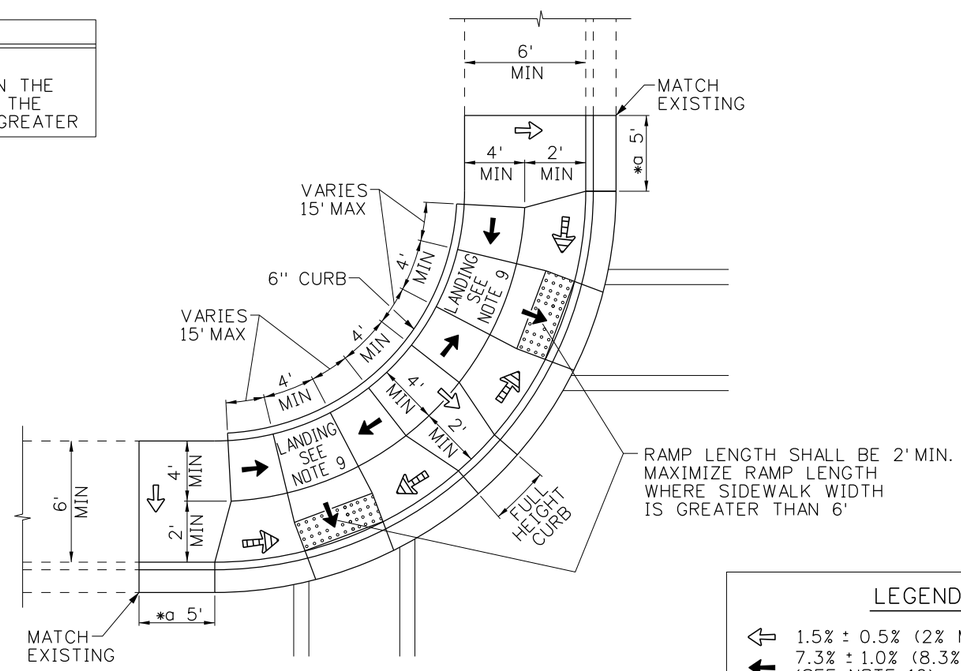

TYPE R-D3

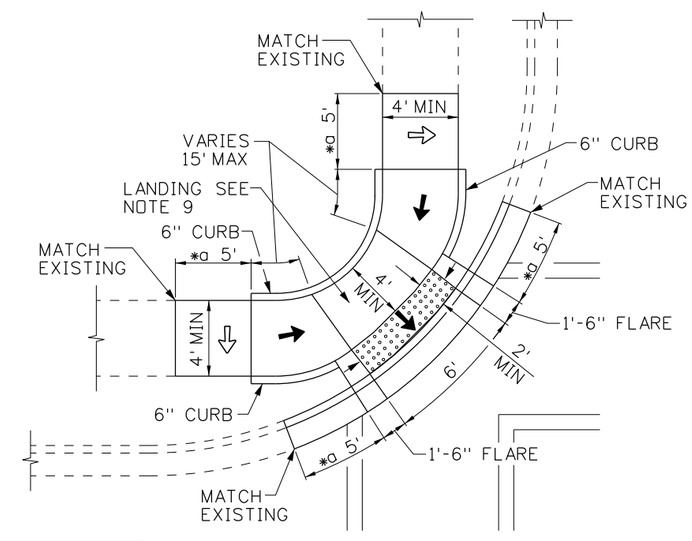

SEE NOTE 13

TYPE R-D4

LEGEND	
⇦	1.5% ± 0.5% (2% MAX) SLOPE
←	7.3% ± 1.0% (8.3% MAX) SLOPE (SEE NOTE 16)
⇦	9.0% ± 1.0% (10.0% MAX) SLOPE

ORIGINAL STORED AT: ITD, Headquarters 3311 West State Boise, Idaho

ORIGINAL SIGNED BY: TED E. MASON DATE ORIGINAL SIGNED: NOVEMBER 23, 2011

REVISIONS								
NO.	DATE	BY	NO.	DATE	BY	NO.	DATE	BY
1	9-11	TEM						

SCALES SHOWN ARE FOR 11" X 17" PRINTS ONLY

CADD FILE NAME: h2b_0911.std

DRAWING DATE: JULY, 2010

IDAHO TRANSPORTATION DEPARTMENT

BOISE IDAHO

ORIGINAL SIGN BY: LOREN THOMAS
HIGHWAYS PROGRAM OVERSIGHT ENGINEER

ORIGINAL SIGN BY: TOM COLE
CHIEF ENGINEER

STANDARD DRAWING

SIDEWALKS & A.D.A. FACILITIES: RETROFIT APPLICATIONS

REQUIRES SHEET 1 OF 4, 3 OF 4, 4 OF 4

English

STANDARD DRAWING NO.

H-2-B

SHEET 2 OF 4

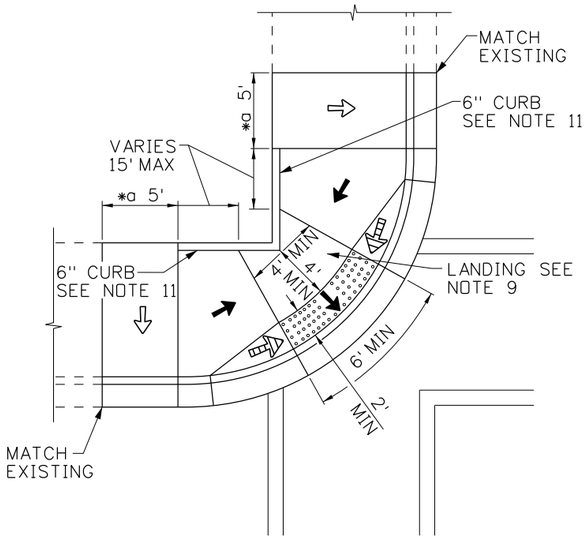

SEE NOTE 13
TYPE R-D5

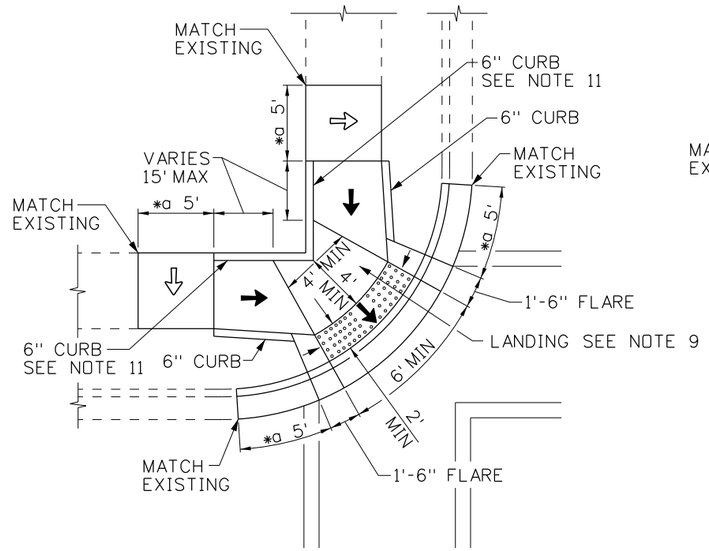

SEE NOTE 13
TYPE R-D6

SUB-NOTES
* a SEE NOTE 8
* b 6' MIN, BUT NOT LESS THAN THE RADIUS OR THE WIDTH OF THE SIDEWALK, WHICHEVER IS GREATER

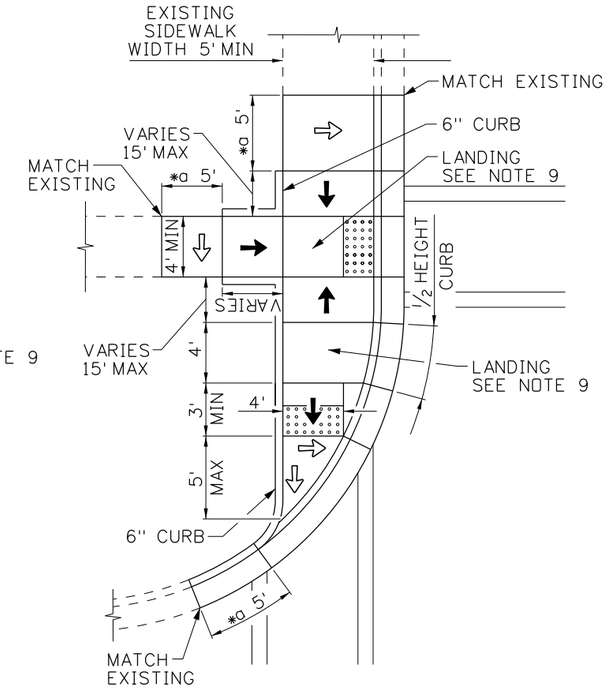

TYPE R-D7

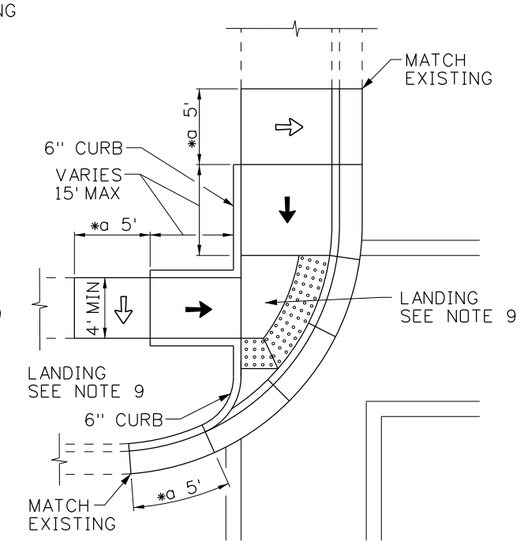

SEE NOTE 13
TYPE R-D8

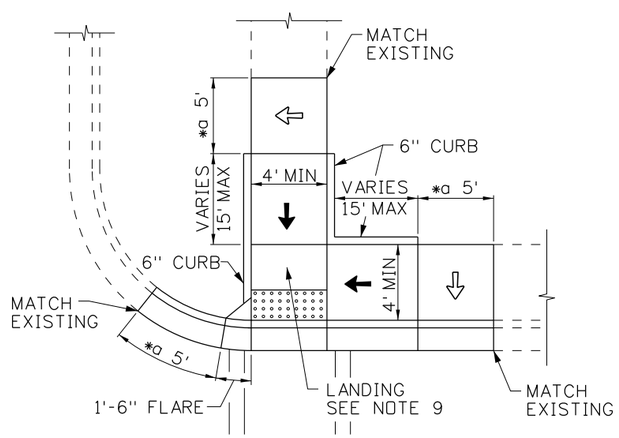

TYPE R-D9

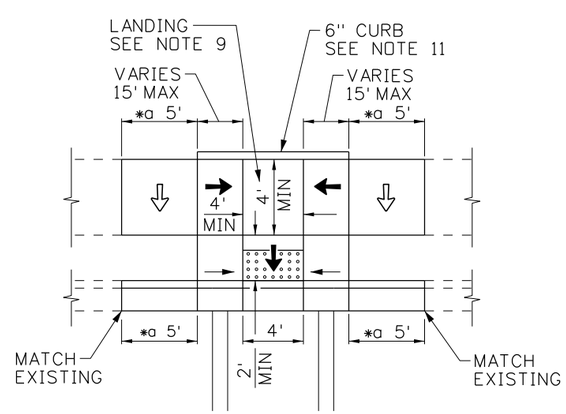

TYPE R-D10

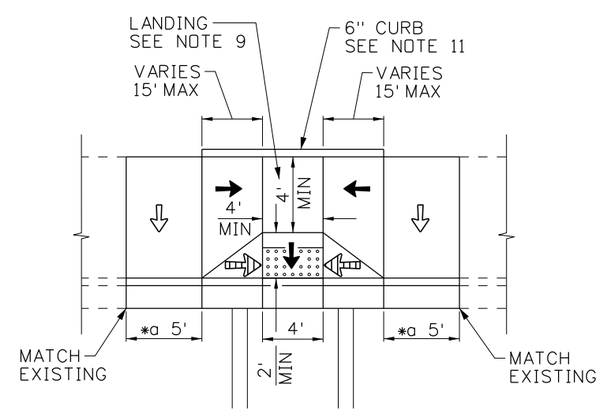

TYPE R-D11

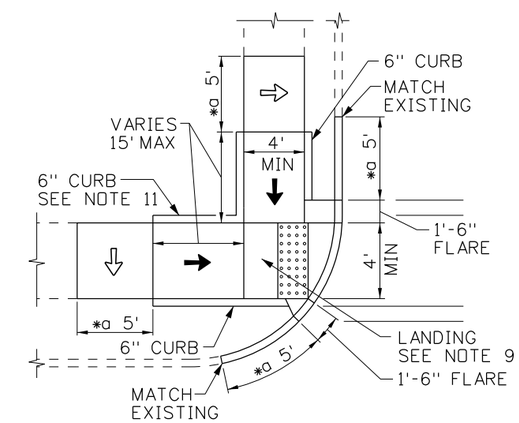

TYPE R-D12

LEGEND	
⇦	1.5% ± 0.5% (2% MAX) SLOPE
←	7.3% ± 1.0% (8.3% MAX) SLOPE (SEE NOTE 16)
⇦	9.0% ± 1.0% (10.0% MAX) SLOPE

ORIGINAL STORED AT: ITD, Headquarters 3311 West State Boise, Idaho

ORIGINAL SIGNED BY: TED E. MASON
DATE ORIGINAL SIGNED: NOVEMBER 23, 2011

REVISIONS								
NO.	DATE	BY	NO.	DATE	BY	NO.	DATE	BY
1	9-11	TEM						

SCALES SHOWN ARE FOR 11" X 17" PRINTS ONLY

CADD FILE NAME: h2b_0911.std

DRAWING DATE: JULY, 2010

IDAHO TRANSPORTATION DEPARTMENT

BOISE IDAHO

ORIGINAL SIGN BY: LOREN THOMAS
HIGHWAYS PROGRAM OVERSIGHT ENGINEER
ORIGINAL SIGN BY: TOM COLE
CHIEF ENGINEER

STANDARD DRAWING

SIDEWALKS & A.D.A. FACILITIES: RETROFIT APPLICATIONS

REQUIRES SHEET 1 OF 4, 2 OF 4, 4 OF 4

English

STANDARD DRAWING NO.
H-2-B

SHEET 3 OF 4

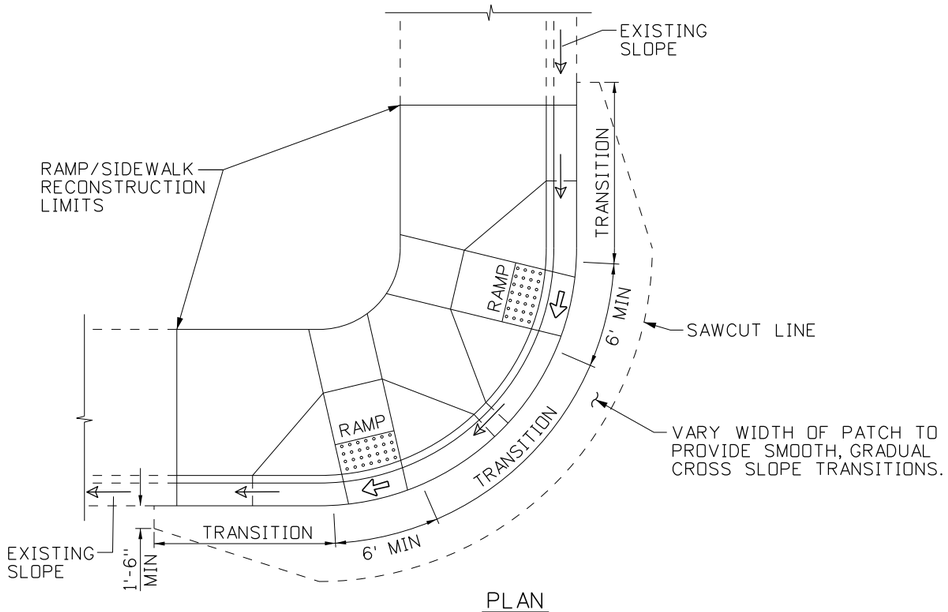

PLAN

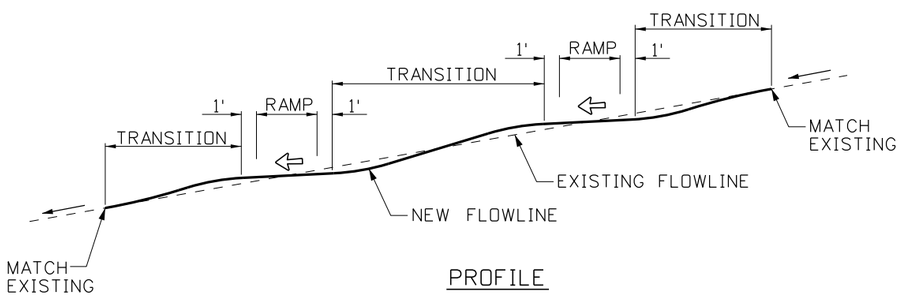

PROFILE

CURB OR CURB/GUTTER PROFILE DETAIL

SUB-NOTES
* a SEE NOTE 8
* b 6' MIN, BUT NOT LESS THAN THE RADIUS OR THE WIDTH OF THE SIDEWALK, WHICHEVER IS GREATER

LEGEND

⇦ 1.5% ± 0.5% (2% MAX) SLOPE

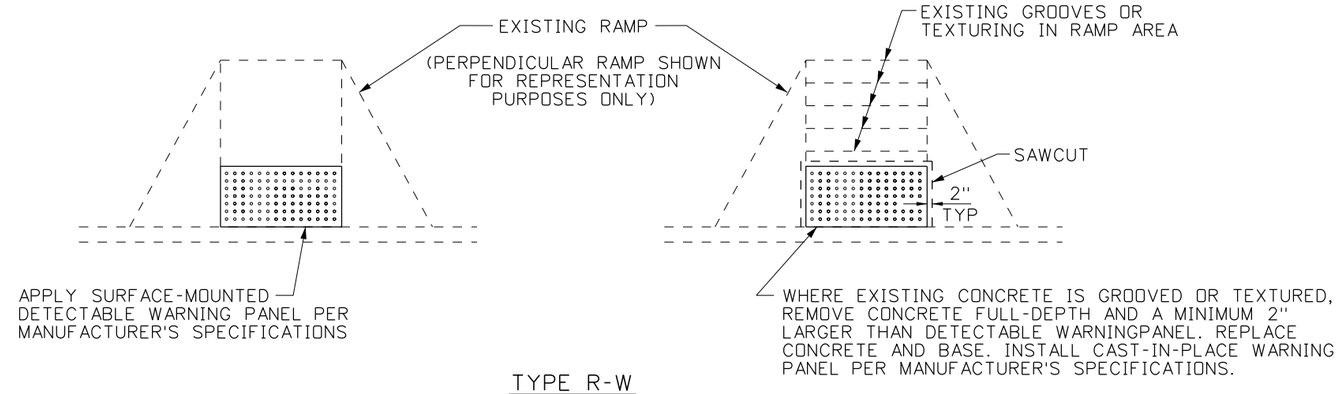

TYPE R-W

DETECTABLE WARNING SURFACE (TRUNCATED DOMES)

GENERAL NOTES

1. THE RAMPS DEPICTED IN THESE DETAILS ARE IDEAL AND ASSUME OPTIMAL ROADWAY GEOMETRIC DESIGN. A CURB HEIGHT OF 6" IS ASSUMED. ADJUSTMENTS MAY BE MADE FOR CONDITIONS IN THE FIELD SUCH AS ROADWAY GRADE, ACTUAL CURB HEIGHT, ETC.
2. THE DETECTABLE WARNING SURFACE SHALL BE INSTALLED 24" DEEP ALONG THE FULL WIDTH OF THE PEDESTRIAN RAMP. AT LEAST ONE CORNER OF THE LEADING EDGE OF THE TRUNCATED DOME PANEL SHALL BE NO MORE THAN 8" FROM THE NORMAL FACE OF CURB. THE DETECTABLE WARNING SURFACE SHALL BE SELECTED FROM THE IDAHO TRANSPORTATION DEPARTMENT'S QUALIFIED PRODUCTS LIST AND INSTALLED BY A MANUFACTURER'S TRAINED CRAFTSMAN. STAMPED CONCRETE DOMES ARE NOT ALLOWED. REFER TO STD. DWG. H-2-A FOR DETECTABLE WARNING SURFACE DETAILS.
3. RAMPS SHALL NOT HAVE ANY UTILITIES OR STRUCTURES WITHIN THE FLARE(S), RAMP(S), OR LANDING(S).
4. FINISH CONCRETE WITH A COARSE BROOM SURFACE PERPENDICULAR TO THE SLOPE IN RAMP, LANDING, AND FLARE AREAS.
5. PLACE PREFORMED EXPANSION JOINT FILLER IN SIDEWALK AREAS ONLY. JOINT FILLER SHALL NOT BE PLACED WITHIN 2' OF THE RAMP, FLARE, OR LANDING. REFER TO STD. DWG. H-1-B FOR DETAILS ON SIDEWALK CONSTRUCTION ADJACENT TO THE CURB RAMP.
6. CROSSWALK MARKINGS ARE SHOWN FOR REPRESENTATION PURPOSES ONLY. CORNER CURB RADII, PEDESTRIAN TRAFFIC, AND VEHICLE TRAFFIC NEEDS MUST BE ADDRESSED WHEN INSTALLING CROSSWALKS FOR CURB RAMPS AT INTERSECTIONS.
7. MATCH EXISTING CURB RADIUS FOR NEW CURB INSTALLATION, UNLESS OTHERWISE NOTED.
8. RECONSTRUCT A MINIMUM LENGTH OF 5' OF SIDEWALK AND CURB/GUTTER BEYOND RAMP, LANDING, AND/OR FLARE TO TRANSITION SLOPE AND/OR WIDTH OF SIDEWALK. THE MAXIMUM LENGTH SHALL BE 15' OR AS DIRECTED. MATCH EXISTING SIDEWALK WIDTHS OF 4' OR GREATER, UNLESS OTHERWISE NOTED. TRANSITION TO A MINIMUM OF 4' WIDTH WHERE EXISTING SIDEWALK WIDTHS ARE LESS THAN 4'.
9. LANDINGS SHALL HAVE ABSOLUTE MINIMUM DIMENSIONS OF 4' x 4' AND ABSOLUTE MAXIMUM SLOPES OF 2% IN ALL DIRECTIONS.
10. REFER TO STD. DWG. H-2-A FOR MATERIAL THICKNESSES AND CROSS SECTIONS.
11. WHERE 6" CURB IS PLACED AGAINST A BUILDING OR RETAINING WALL, THE TOP OF CURB SHALL MATCH THE ORIGINAL SIDEWALK ELEVATION.
12. GRADE BREAKS SHALL BE ANGULAR AND DISTINCT.
13. TYPICALLY, TWO CURB RAMPS MUST BE PROVIDED AT EACH STREET CORNER. IN ALTERATIONS WHERE EXISTING PHYSICAL CONSTRAINTS PREVENT TWO CURB RAMPS FROM BEING INSTALLED AT A STREET CORNER, A SINGLE DIAGONAL CURB RAMP IS PERMITTED AT THE CORNER.
14. REFER TO THE "MANUAL ON UNIFORM TRAFFIC CONTROL DEVICES" (MUTCD) FOR PLACEMENT OF APPROACH CROSSWALK MARKINGS AND VEHICLE STOP BARS.
15. FLARES ARE GENERALLY PREFERRED OVER RETURN CURBS TO PROVIDE GRADUAL CURB TRANSITIONS. RETURN CURBS ON RAMPS SHALL ONLY BE INSTALLED IN LOCATIONS THAT ARE NOT PART OF THE PEDESTRIAN CIRCULATION PATH. FLARES THAT ARE NOT PART OF THE PEDESTRIAN CIRCULATION PATH MAY BE ANY SLOPE (33% PREFERRED MAX).
16. LIMIT CROSS SLOPE ON RAMPS TO MAXIMUM OF 2%.
17. NOT TO SCALE.

ORIGINAL STORED AT: ITD, Headquarters 3311 West State Boise, Idaho

ORIGINAL SIGNED BY: TED E. MASON DATE ORIGINAL SIGNED: NOVEMBER 23, 2011

REVISIONS								
NO.	DATE	BY	NO.	DATE	BY	NO.	DATE	BY
1	9-11	TEM						

SCALES SHOWN ARE FOR 11" X 17" PRINTS ONLY

CADD FILE NAME: h2b_0911.std

DRAWING DATE: JULY, 2010

IDAHO TRANSPORTATION DEPARTMENT

BOISE IDAHO

ORIGINAL SIGN BY: LOREN THOMAS
HIGHWAYS PROGRAM OVERSIGHT ENGINEER
ORIGINAL SIGN BY: TOM COLE
CHIEF ENGINEER

STANDARD DRAWING

SIDEWALKS & A.D.A. FACILITIES: RETROFIT APPLICATIONS

REQUIRES SHEET 1 OF 4, 2 OF 4, 3 OF 4

English

STANDARD DRAWING NO. H-2-B

SHEET 4 OF 4

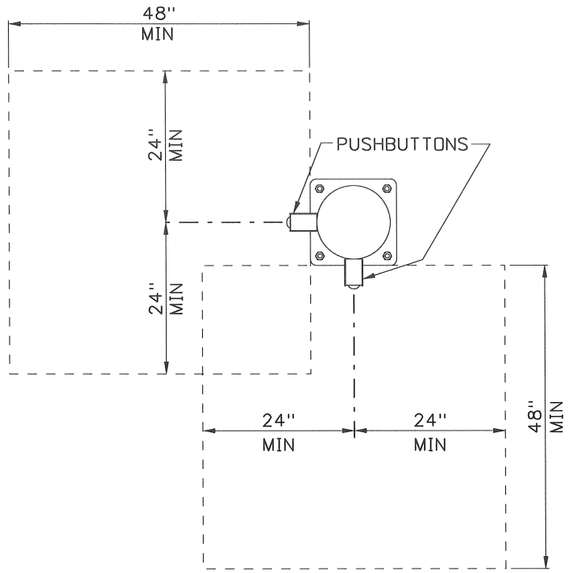

PLAN

NEW CONSTRUCTION CLEAR SPACE

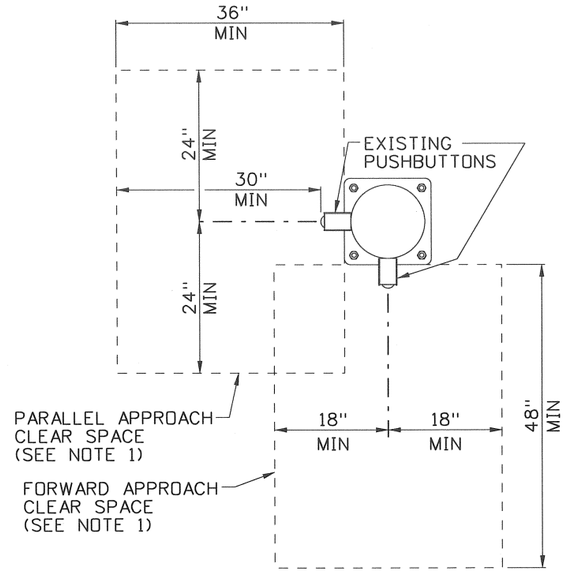

PLAN

RETROFIT CLEAR SPACE BENEATH PUSHBUTTON

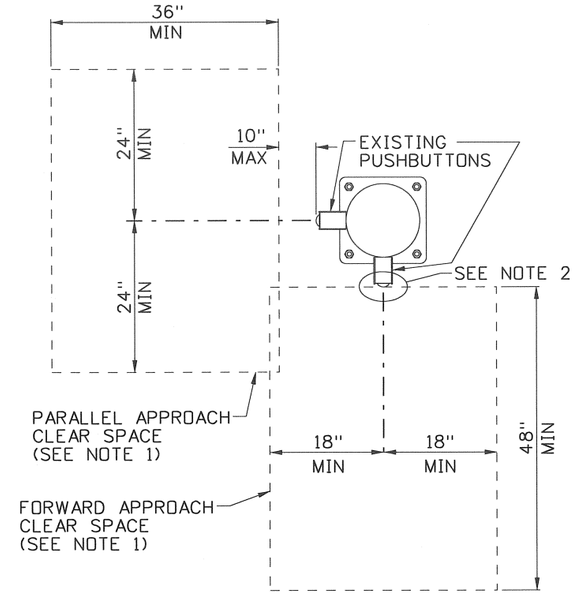

PLAN

RETROFIT CLEAR SPACE BEYOND PUSHBUTTON

NOTES:

1. CLEAR SPACE OF 36" X 48" SHALL BE PROVIDED ON EXISTING SURFACE OR NEW SURFACE AT PUSHBUTTON LOCATIONS. THE CLEAR SPACE MAY BE ORIENTED FOR EITHER A FORWARD APPROACH OR PARALLEL APPROACH TO EACH PUSHBUTTON. THE SLOPE OF THE CLEAR SPACE SHALL BE 2% MAX IN ALL DIRECTIONS, CONSISTENT WITH LANDING AREA SLOPES.
2. CLEAR SPACE FOR A FORWARD APPROACH IS PERMITTED TO ABUT THE PUSHBUTTON OR EXTEND BENEATH THE PUSHBUTTON. IN NO CASE SHALL THE CLEAR SPACE BE LOCATED BEYOND THE PUSHBUTTON.
3. ADJUST THE VERTICAL POSITION OF PUSHBUTTON WHERE EXISTING LOCATION IS NOT WITHIN THE DIMENSIONS PROVIDED. THE PREFERABLE HEIGHT IS 42" TO CENTER OF PUSHBUTTON. REMAINING HOLES IN SIGNAL POLE SHALL BE PLUGGED.
4. MOVE PUSHBUTTON TO OPPOSITE SIDE OF POLE WHERE CLEAR SPACE TO CURB, RAMP, FLARE, OR OTHER OBSTRUCTION IS NOT AVAILABLE ON EXISTING OR NEW SURFACES. THE ACCOMPANYING PUSHBUTTON SHALL ALSO BE MOVED TO THE OPPOSITE SIDE OF THE POLE AND CLEAR SPACES SHALL BE PROVIDED FOR BOTH PUSHBUTTONS. THE ACCOMPANYING PUSHBUTTON IS NOT REQUIRED TO BE MOVED TO THE OPPOSITE SIDE OF THE POLE ONLY WHERE PHYSICAL LIMITATIONS PREVENT A CLEAR SPACE FROM BEING PROVIDED. IN THIS CASE, THE SINGLE RELOCATED PUSHBUTTON SHALL BE INSTALLED IN AN H-4 ASSEMBLY WITH A REVERSED A.D.A. COMPLIANT TACTILE ARROW. REMAINING HOLES IN SIGNAL POLE SHALL BE PLUGGED.
5. WHERE THE PUSHBUTTON CLEAR SPACE IS CONFINED ON ALL OR PART OF THREE SIDES BY ABOVE-GROUND OBSTRUCTIONS SUCH AS CURB, ADDITIONAL CLEAR SPACE SHALL BE PROVIDED PER DETAILS BELOW.

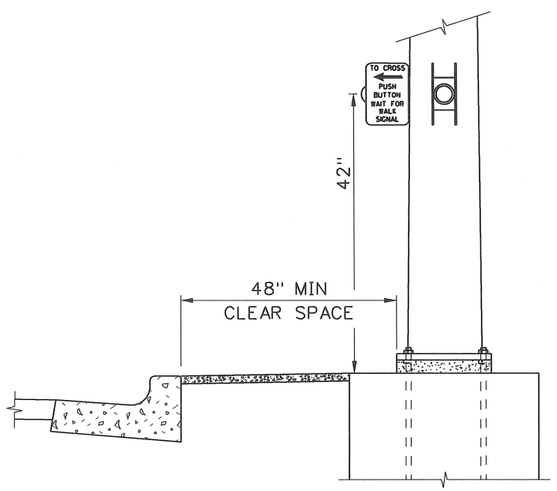

ELEVATION

NEW CONSTRUCTION CLEAR SPACE

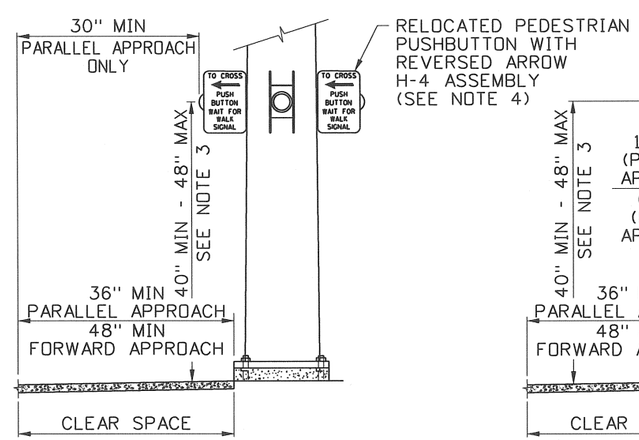

ELEVATION

RETROFIT CLEAR SPACE BENEATH PUSHBUTTON

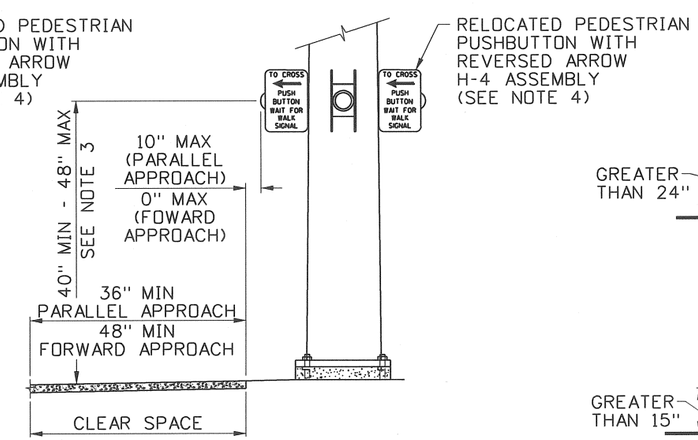

ELEVATION

RETROFIT CLEAR SPACE BEYOND PUSHBUTTON

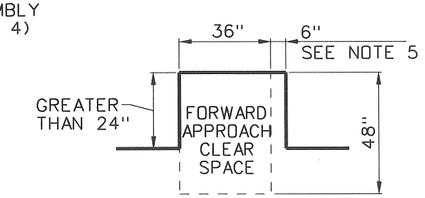

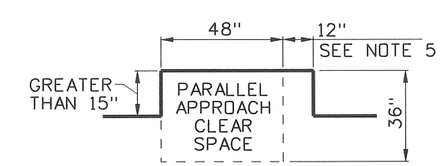

PEDESTRIAN SIGNAL PUSHBUTTON DETAILS

REVISIONS								
NO.	DATE	BY	NO.	DATE	BY	NO.	DATE	BY

SCALES SHOWN ARE FOR 11" X 17" PRINTS ONLY

CADD FILE NAME: h2c_0710.std

DRAWING DATE: JULY, 2010

IDAHO TRANSPORTATION DEPARTMENT

BOISE IDAHO

ASSISTANT CHIEF ENGINEER (DEVELOPMENT)

CHIEF ENGINEER

STANDARD DRAWING

SIDEWALKS & A.D.A. PEDESTRIAN PUSHBUTTON DETAILS

English

STANDARD DRAWING NO.

H-2-C

SHEET 1 OF 1

PROFESSIONAL ENGINEER REGISTERED 6506 STATE OF IDAHO TED E. MASON 7/23/2010

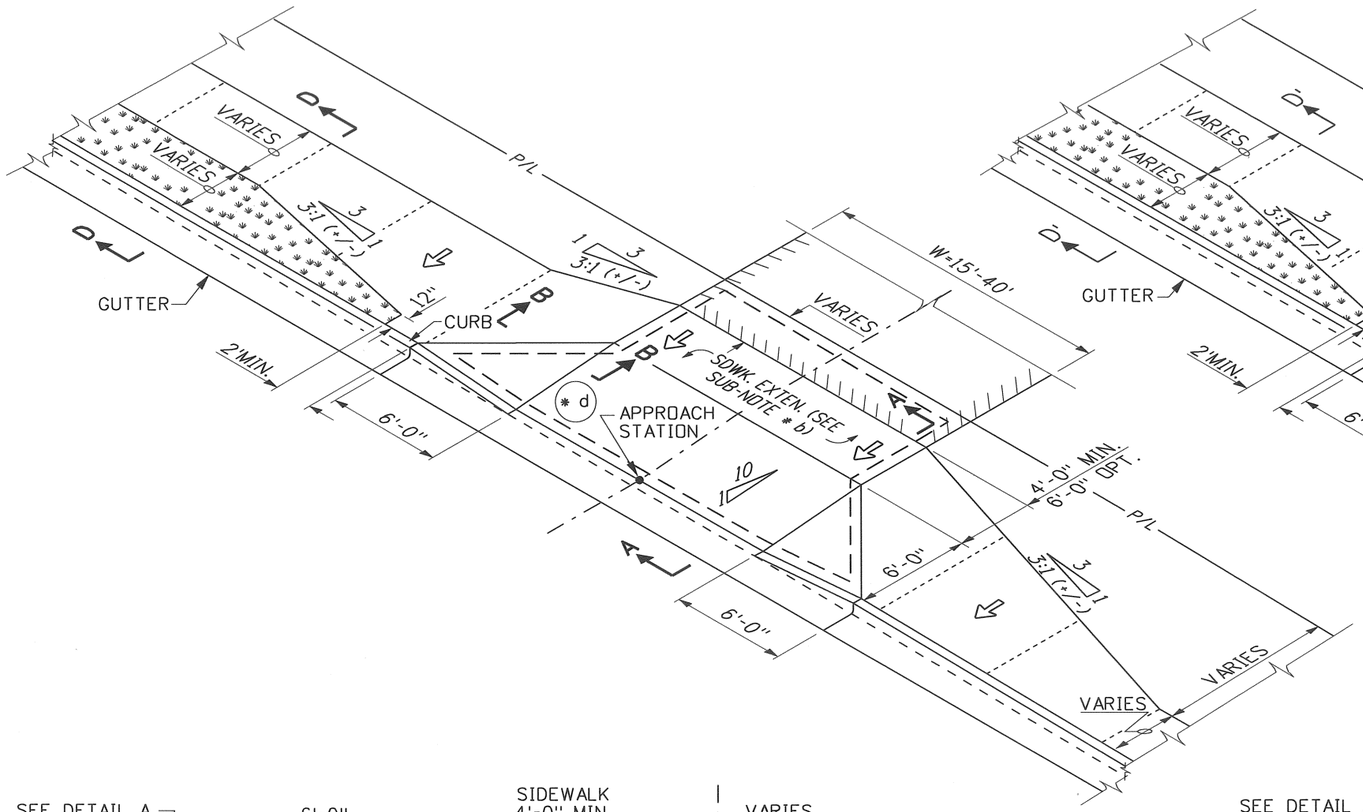

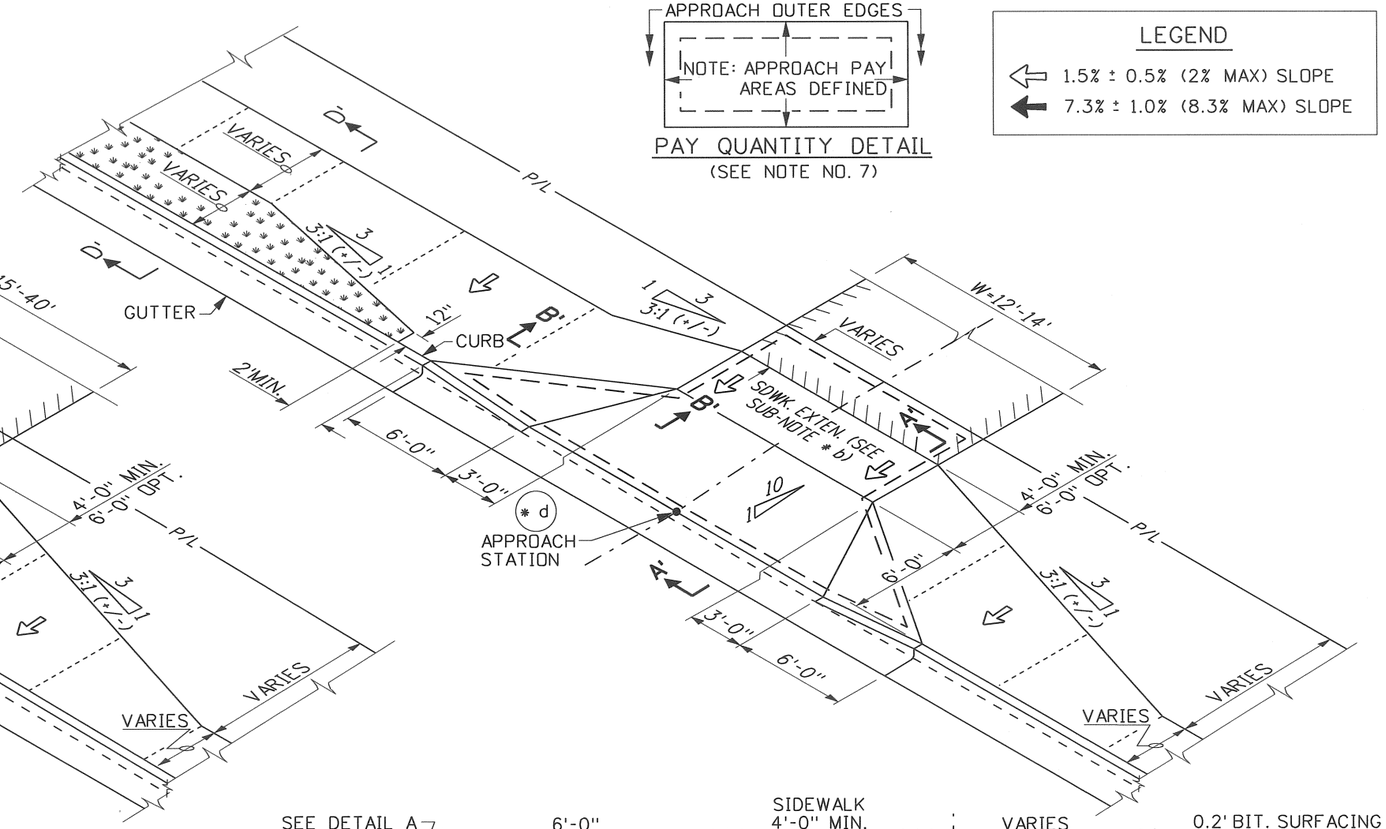

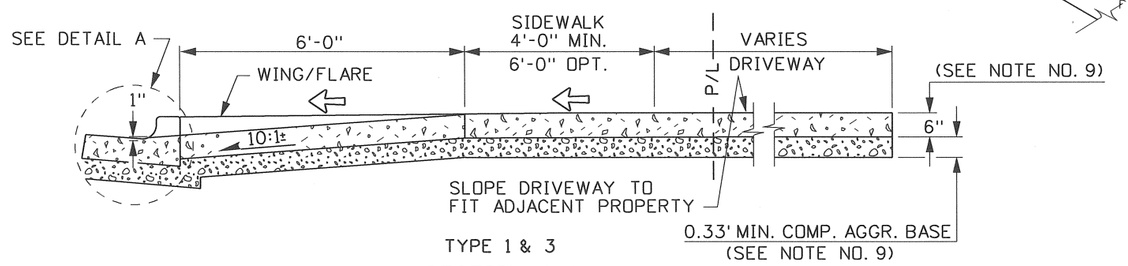

TYPE 1 & 3

SECTION A-A

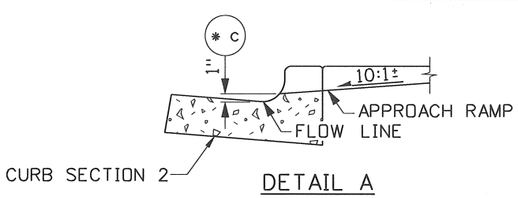

DETAIL A

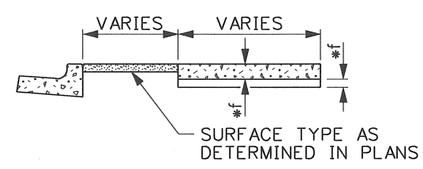

SIDEWALK

SECTION D-D & D'-D'

TYPE 1 (CONCRETE) OR 2 (BITUMINOUS)

STANDARD URBAN APPROACH

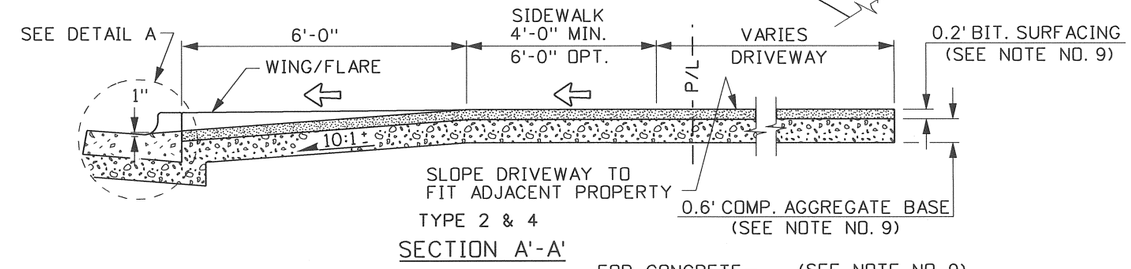

TYPE 2 & 4

SECTION A'-A'

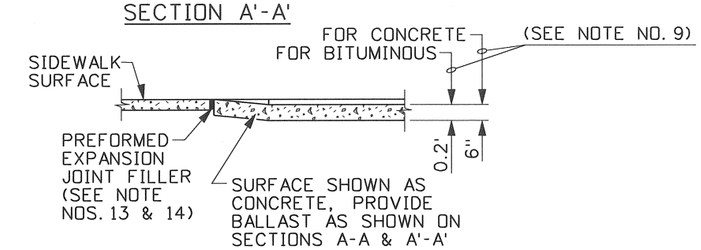

SECTION B-B & B'-B'

(APPROACH FLARE)

TYPE 3 (CONCRETE) OR 4 (BITUMINOUS)

FLARED URBAN APPROACH

REVISIONS								
NO.	DATE	BY	NO.	DATE	BY	NO.	DATE	BY
1	11-90	GB	6	5-06	MSM			
2	9-93	MSM	7	5-07	MSM			
3	12-94	MSM	8	7-10	JAW			
4	9-02	MSM						
5	6-04	MSM						

SCALES SHOWN ARE FOR 11" X 17" PRINTS ONLY

CADD FILE NAME: h3_0910.std

DRAWING DATE: APRIL, 1990

IDAHO TRANSPORTATION DEPARTMENT

BOISE IDAHO

ASSISTANT CHIEF ENGINEER (DEVELOPMENT)

CHIEF ENGINEER

STANDARD DRAWING

URBAN APPROACHES & CONCRETE SIDEWALK

REQUIRES SHEET 2 OF 3, 3 OF 3 & STD. DWG. H-1-A, H-1-B

English

STANDARD DRAWING NO.

H-3

SHEET 1 OF 3

PROFESSIONAL ENGINEER REGISTERED 6506 9/22/2010 STATE OF IDAHO TED E. MASON

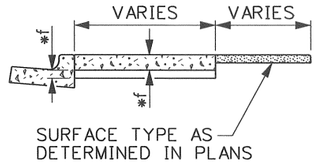

SECTION G-G

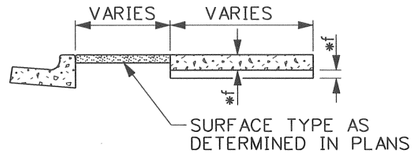

SECTION G'-G'

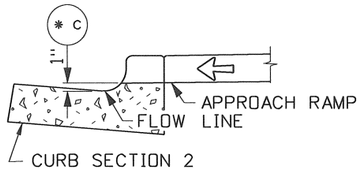

DETAIL C

LEGEND

⇦ 1.5% ± 0.5% (2% MAX) SLOPE

🡸 7.3% ± 1.0% (8.3% MAX) SLOPE

SUB-NOTES

- * a THE APPROACH SKEW ANGLE IS TO FALL WITHIN THE ALLOWABLE OR DESIRABLE LIMITS. THE DESIRABLE LIMIT IS CONSIDERED THE SAFEST OPTIMUM.
- * b (SEE NOTE NOS. 6, 7, & 8)
- * c RAMP ENTRANCE 1" ABOVE GUTTER FLOW LINE.
- * d SEE "SKEW ANGLE DETAIL" & NOTE NO. 2.
- * e (SEE NOTE NO. 5)
- * f SEE STD. DWG. H-1-B FOR SIDEWALK MATERIAL THICKNESSES.

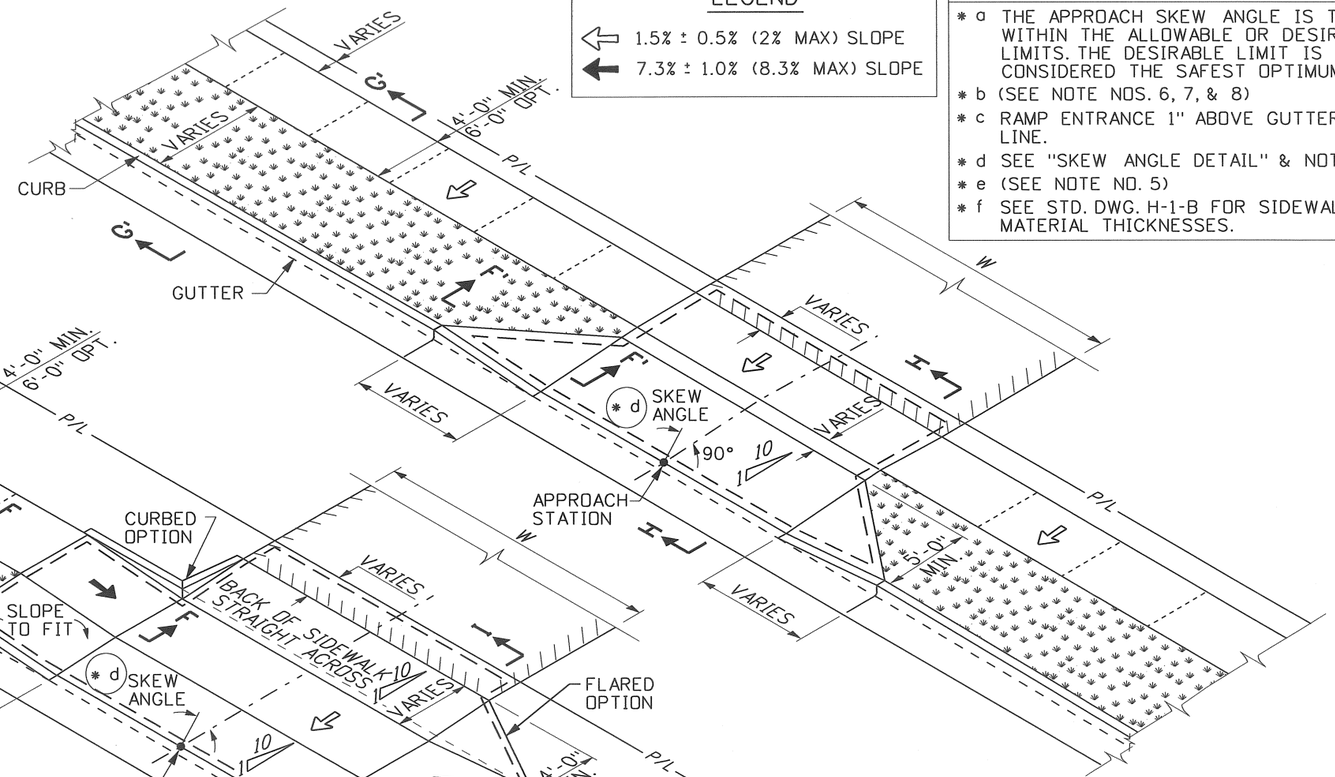

TYPE 5 (CONCRETE) OR 6 (BITUMINOUS)

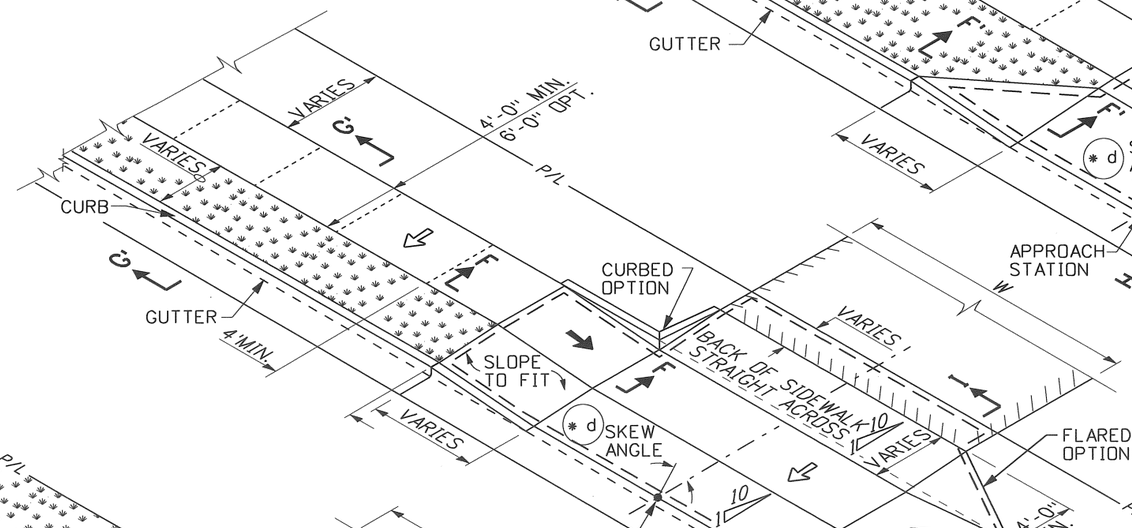

TYPE 7 (CONCRETE) OR 8 (BITUMINOUS)

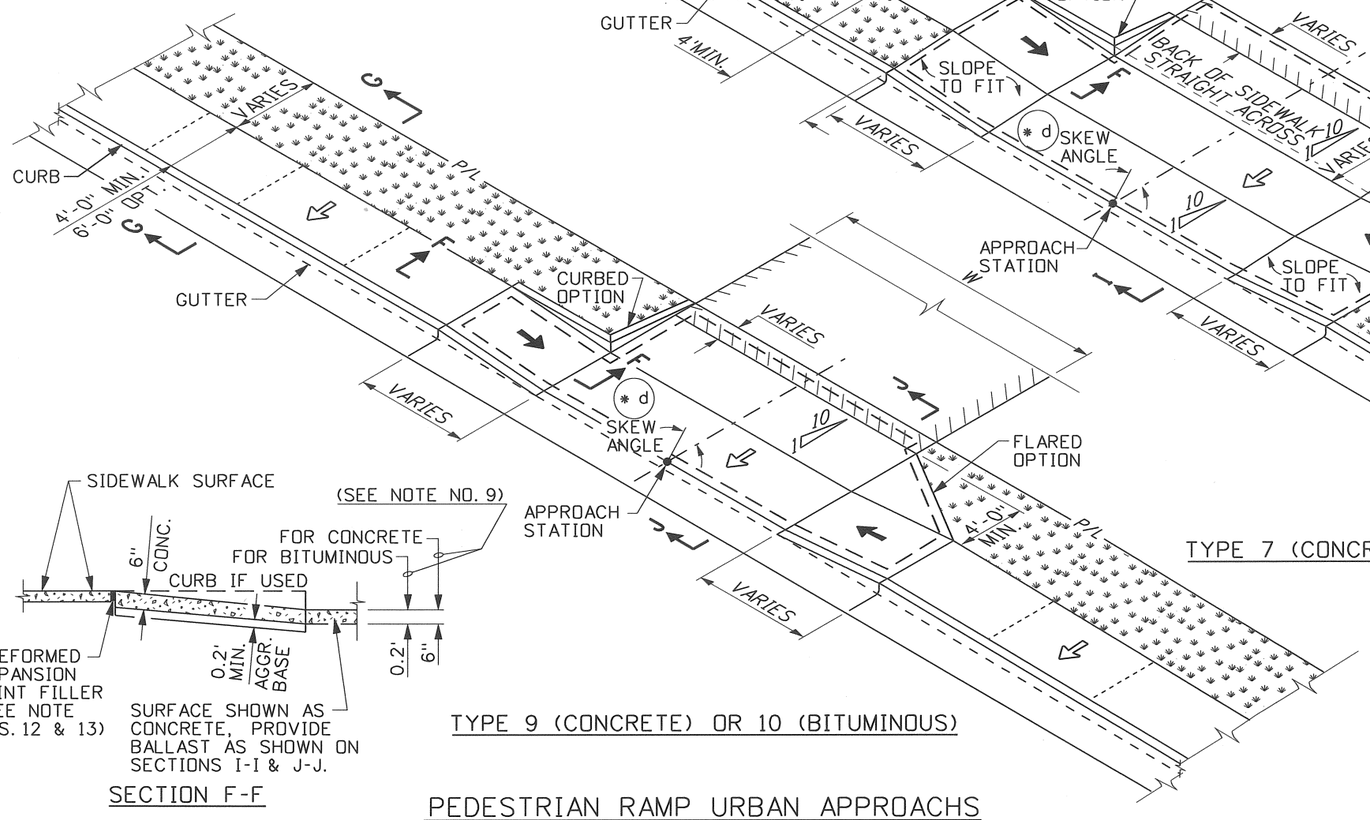

TYPE 9 (CONCRETE) OR 10 (BITUMINOUS)

SECTION F-F

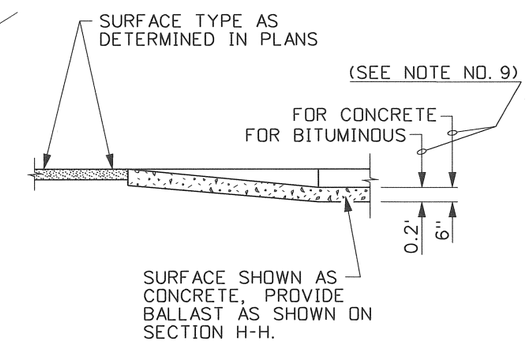

SECTION F'-F'

PEDESTRIAN RAMP URBAN APPROACHS

REVISIONS								
NO.	DATE	BY	NO.	DATE	BY	NO.	DATE	BY
1	11-90	GB	6	5-06	MSM			
2	9-93	MSM	7	5-07	MSM			
3	12-94	MSM	8	7-10	JAW			
4	9-02	MSM						
5	6-04	MSM						

SCALES SHOWN ARE FOR 11" X 17" PRINTS ONLY

CADD FILE NAME: h3_0910.std

DRAWING DATE: APRIL, 1990

IDAHO TRANSPORTATION DEPARTMENT

BOISE IDAHO

ASSISTANT CHIEF ENGINEER (DEVELOPMENT)

CHIEF ENGINEER

STANDARD DRAWING

URBAN APPROACHES & CONCRETE SIDEWALK

REQUIRES SHEET 2 OF 3, 3 OF 3 & STD. DWG. H-1-A, H-1-B

English

STANDARD DRAWING NO.

H-3

SHEET 2 OF 3

PROFESSIONAL ENGINEER REGISTERED 6506 9/22/2010 STATE OF IDAHO TED E. MASON

LEGEND

⇦ 1.5% ± 0.5% (2% MAX) SLOPE

🡄 7.3% ± 1.0% (8.3% MAX) SLOPE

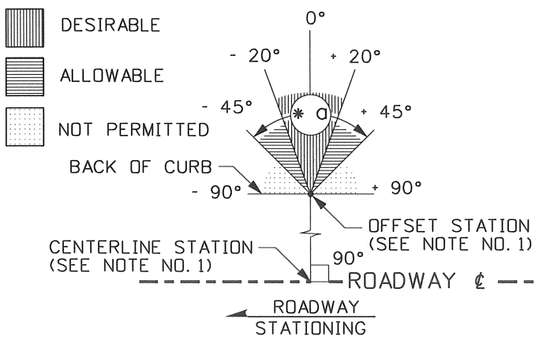

SKEW ANGLE DETAIL

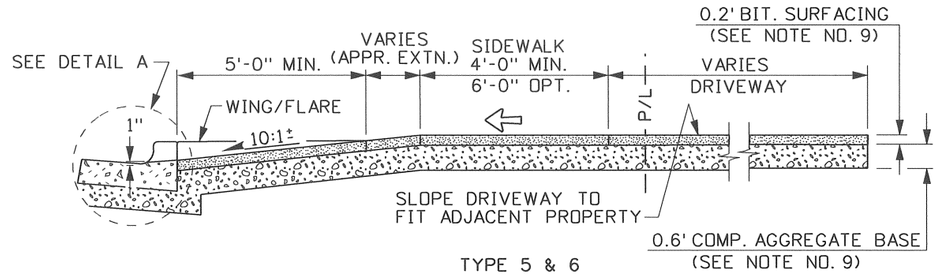

TYPE 5 & 6

SECTION H-H

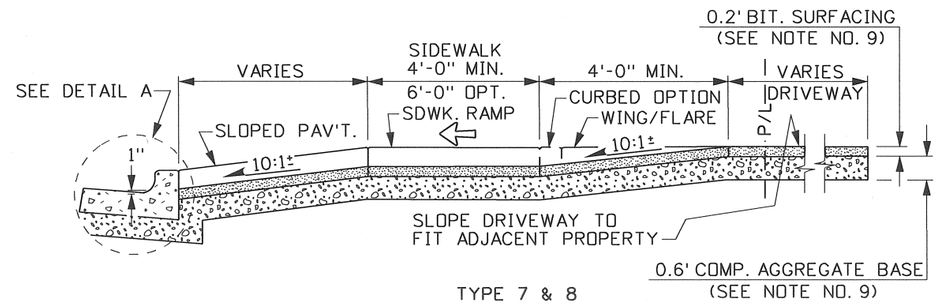

TYPE 7 & 8

SECTION I-I

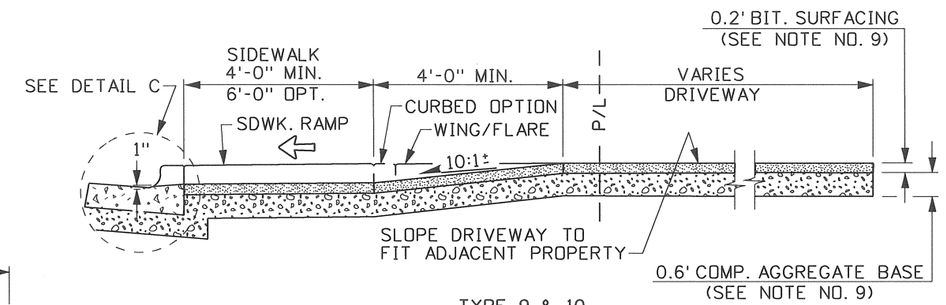

TYPE 9 & 10

SECTION J-J

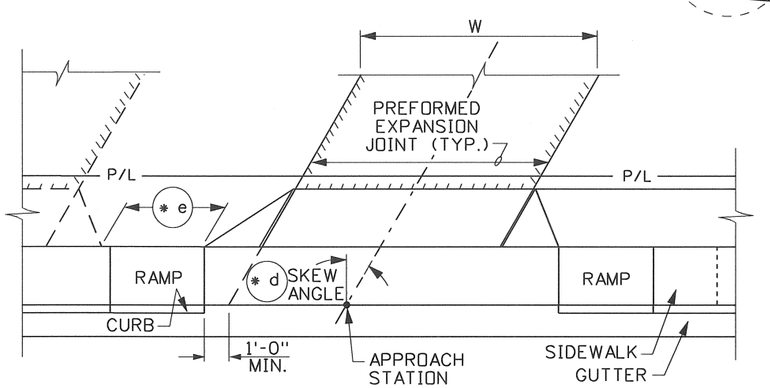

TYPICAL SKEWED URBAN APPROACH

NOTES

1. APPROACHES BEGIN AT A POINT (OFFSET STATION) WHICH IS OFFSET TO THE BACK OF CURB PERPENDICULAR FROM THE CENTERLINE STATION. THE SKEW ANGLE POINT-OF-ROTATION IS AT THE OFFSET STATION.
2. AN APPROACH DESCRIPTION, AS SHOWN ON THE PLANS, SHOULD INCLUDE A ROADWAY CENTERLINE STATION, THE OFFSET (LEFT OR RIGHT) DISTANCE TO THE BACK OF CURB, A SKEW ANGLE WITH "(+/-)" DEGREES (0° SKEW ANGLES ARE NOT NOTED), AND THE WIDTH, "W", OF THE APPROACH.
3. THE APPROACH FLARE LENGTH (THE LENGTH OF THE CURB AND GUTTER TRANSITION FROM FULL HEIGHT TO APPROACH HEIGHT) IS CONSTANT REGARDLESS OF THE SKEW ANGLE.
4. TYPE 3 AND 4 ARE FOR URBAN APPROACHES 14 FEET OR LESS IN WIDTH.
5. THE DISTANCE BETWEEN APPROACHES IS DICTATED BY POLICY. NORMALLY, THE MINIMUM DISTANCE BETWEEN APPROACHES IS 5'-0". REFER TO THE ITD "RIGHT-OF-WAY USE POLICY" AND "STATE HIGHWAY ACCESS CONTROL" POLICIES FOR CURRENT INFORMATION GOVERNING ACCESS CONTROL, APPROACH PLACEMENT, AND DIMENSIONING REGULATIONS.
6. A SIDEWALK EXTENSION SHALL BE CONSTRUCTED AT THE BACK OF THE APPROACH. BOTH SKEWED AND UNSKEWED APPROACHES SHALL BE CONSTRUCTED SO THAT THE WIDTH OF THE EXTENSION IS 4' MINIMUM AT THE NARROWEST POINT. WHEN INSUFFICIENT SPACE IS AVAILABLE TO CONSTRUCT THE NEEDED 4' SIDEWALK EXTENSION, CONSTRUCT THE PEDESTRIAN RAMP STYLE APPROACH (TYPES 7, 8, 9, OR 10) INSTEAD.
7. PAY QUANTITIES FOR URBAN APPROACHES SHALL INCLUDE THE APPROACH RAMP/DRIVEWAY AREA, THE APPROACH FLARES/WINGS, CURBS FOR THE CURBED OPTION, THE APPROACH PEDESTRIAN RAMPS TO SIDEWALKS, AND THE APPROACH EXTENSION WHEN NEEDED (PAY QUANTITIES INCLUDE ANY PART OF THE APPROACH THAT MEETS THE REQUIREMENTS OF NOTE NO. 9.). THE APPROACH EXTENSION LIMIT IS AT THE PROPERTY LINE. THE URBAN APPROACH PAY QUANTITY DOES NOT INCLUDE PAY FOR CURB AND/OR GUTTER IN FRONT OF THE APPROACH.
8. NORMALLY USE A MINIMUM 3:1 (+/-) OR AN AESTHETICALLY PLEASING TAPER IN FROM THE EDGE OF NEW OR EXISTING SIDEWALK TO THE BACK OF THE APPROACH 4' MINIMUM APPROACH EXTENSION.
9. ALL TYPE 1, 3, 5, 7, & 9 APPROACH RAMPS AND FLARES SHALL HAVE MINIMUM CONCRETE THICKNESS OF 6" AND MINIMUM COMPACTED AGGREGATE BASE OF 0.33'. ALL TYPE 2, 4, 6, 8, & 10 APPROACH RAMPS AND FLARES SHALL HAVE A MINIMUM ASPHALT THICKNESS OF 0.2 FEET AND A MINIMUM 0.6 FEET OF COMPACTED AGGREGATE BASE.
10. ALL PEDESTRIAN RAMPS SHALL HAVE A SLOPE OF 12:1 OR FLATTER. ALL URBAN APPROACH RAMPS/DRIVEWAYS SHALL HAVE A SLOPE OF 10:1 OR FLATTER. THE TRAVERSE SLOPE OF SIDEWALKS AND APPROACH EXTENSIONS CONSTRUCTED FOR A SIDEWALK SHALL NOT BE MORE THAN 2%.
11. TEXTURE THE CONCRETE APPROACH RAMPS WITH A PERPENDICULAR TO THE SLOPE COURSE BROOM SURFACE.
12. AN APPROVED BOND PREVENTIVE SHALL BE PROVIDED BETWEEN THE SIDEWALK AND CURB WHEN PLACED ADJACENT TO EACH OTHER. WHEN CONSTRUCTING NEW SIDEWALK ADJACENT TO EXISTING CURB OR SIDEWALK, THE NEW JOINTS SHALL FALL IN THE SAME SEQUENCE AS THE EXISTING.
13. A PREFORMED EXPANSION JOINT FILLER SHALL BE PLACED BETWEEN THE SIDEWALK AND THE URBAN APPROACH CONSTRUCTION. EXPANSION JOINT FILLER SHALL BE PLACED EVERY 40' FOR NEW SIDEWALK CONSTRUCTION.
14. SIDEWALK CONSTRUCTION JOINTS SHALL BE CONSTRUCTED AT 5' SPACING. APPROXIMATELY 1/8" WIDE, 3/4" IN DEPTH, AND FINISHED AND EDGED SMOOTH.
15. COMBINATION CURB AND GUTTER SECTION 2 IS SHOWN IN THE DRAWING DETAILS FOR OTHER CURB TYPES REFER TO STD. DWG. H-1-A (CURBS, GUTTERS, TRAFFIC SEPARATORS, AND RAISED CHANNELIZATION END TREATMENT).
16. NOT TO SCALE.

PROFESSIONAL ENGINEER REGISTERED 6506 9/22/2010 STATE OF IDAHO TED E. MASON

REVISIONS

NO.	DATE	BY	NO.	DATE	BY	NO.	DATE	BY
1	11-90	GB	6	5-06	MSM			
2	9-93	MSM	7	5-07	MSM			
3	12-94	MSM	8	7-10	JAW			
4	9-02	MSM						
5	6-04	MSM						

SCALES SHOWN ARE FOR 11" X 17" PRINTS ONLY

CADD FILE NAME: h3_0910.std

DRAWING DATE: APRIL, 1990

IDAHO TRANSPORTATION DEPARTMENT

BOISE IDAHO

ASSISTANT CHIEF ENGINEER (DEVELOPMENT)

CHIEF ENGINEER

STANDARD DRAWING

URBAN APPROACHES & CONCRETE SIDEWALK

REQUIRES SHEET 2 OF 3, 3 OF 3 & STD. DWG. H-1-A, H-1-B

English

STANDARD DRAWING NO. H-3

SHEET 3 OF 3

PRIVATE & COMMERCIAL APPROACHES

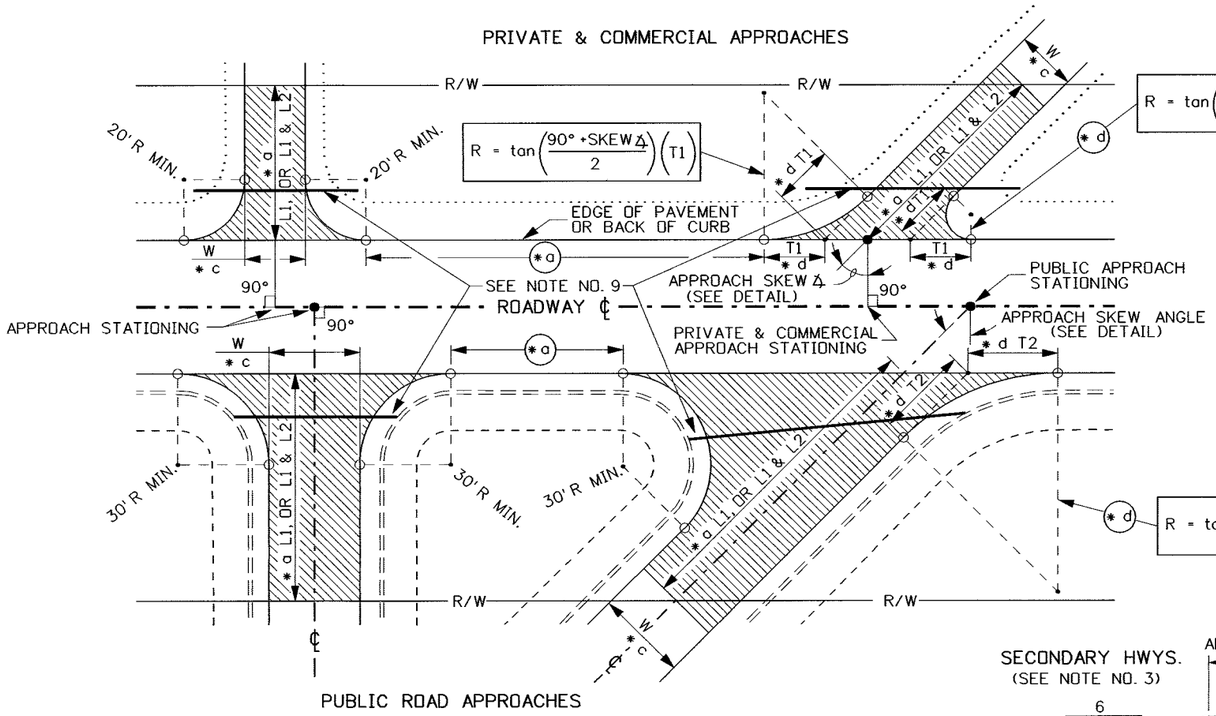

PUBLIC ROAD APPROACHES

APPROACH PLAN TYPICALS

APPROACH PLAN LEGEND & APPROACH NOMENCLATURE	
CUT	
FILL	
PROPOSED DITCH	
PROPOSED CULVERT	
SKEW Δ	SEE NOTE NO. 10
R	RADIUS OF SHD. CURVE
T1 & T2	TANGENT OF SLD. CURVE
W	APPROACH WIDTH
G1 & G2	APPR. GRADES 1 & 2 (%)
C	CHANGE IN GRADE (%)
L1 & L2	HORZ. LENGTH OF GRADE

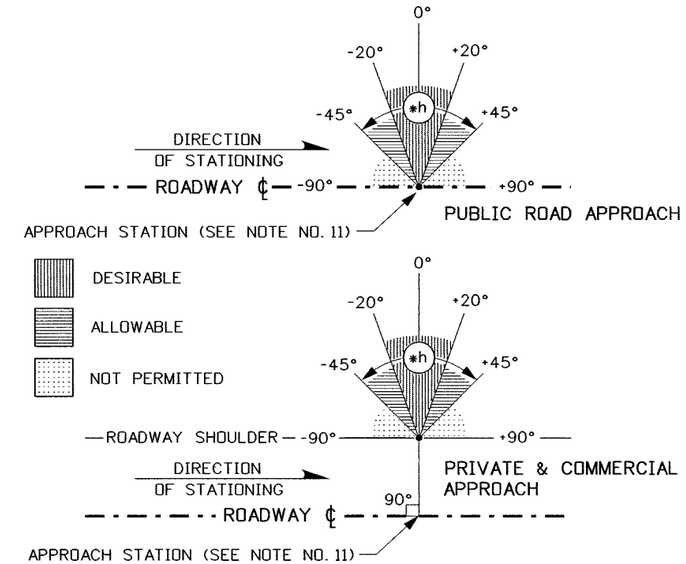

APPROACH SKEW ANGLE

(SEE NOTE NO. 10)

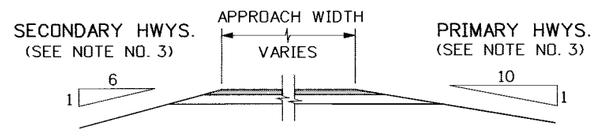

APPROACH TYPICAL - CLEARZONE SLOPES

(PUBLIC & PRIVATE)

NOTES

1. RURAL PRIVATE, COMMERCIAL, AND PUBLIC APPROACHES SHALL BE PAVED TO THE RIGHT-OF-WAY LINE OR TO THE BACK OF THE SHOULDER CURVE (APPROACH RADIUS). FARMYARD AND FIELD APPROACHES THAT ARE OCCASIONALLY USED MAY BE PAVED A MINIMUM OF 5' FROM THE SHOULDER LINE. APPROACHES ON EXISTING UNPAVED HIGHWAYS ARE EXEMPT.
2. REFER TO THE ITD ADMINISTRATIVE POLICY (A-12-01) FOR ADDITIONAL INFORMATION ON LOCATION OF APPROACHES.
3. WITHIN THE CLEARZONE THE SIDE SLOPES OF APPROACHES SHALL BE A MINIMUM OF 6:1 OF SECONDARY HIGHWAYS AND A MINIMUM OF 10:1 ON PRIMARY HIGHWAYS.
4. WHEN THE "MAXIMUM CHANGE IN GRADE" (APPROACH GRADE TABLE) "C" IS EXCEEDED, A MINIMUM 10' VERTICAL CURVE SHALL BE USED IN THE APPROACH PROFILE.
5. THE % GRADE OF "G2" SHALL BE A MAXIMUM OF 7% FOR FLAT TERRAIN, 11% FOR ROLLING TERRAIN, OR 15% FOR MOUNTAINOUS.
6. APPROACH GRADES EXCEEDING 10% ARE NOT RECOMMENDED BECAUSE EMERGENCY VEHICLES MAY BE IMPEDED.
7. THE BALLAST REQUIREMENTS OF RURAL APPROACHES SHALL BE AS SHOWN ON THE PLANS.
8. WHEN A MAILBOX TURNOUT IS INSTALLED WITH A RURAL APPROACH, STD. DWG. H-4-B IS REQUIRED.
9. ALL RURAL PRIVATE AND COMMERCIAL APPROACHES SHALL BE DESIGNED AND CONSTRUCTED IN A MANNER THAT THE APPROACH DRAINAGE IS INDEPENDENT AND DOES NOT CONTRIBUTE TO EXISTING HIGHWAY DRAINAGE. ALL RURAL PUBLIC APPROACHES SHALL BE DESIGNED AND CONSTRUCTED TO ADDRESS BOTH THE MAIN HIGHWAY AND APPROACH DRAINAGE.
10. THE APPROACH SKEW ANGLE IS THE DEFLECTION ANGLE BETWEEN A LINE PERPENDICULAR TO THE HIGHWAY CENTERLINE AND THE APPROACH CENTERLINE.
11. RURAL PRIVATE AND COMMERCIAL APPROACHES ARE REFERENCED LEFT OR RIGHT OF THE HIGHWAY CENTERLINE STATION TO THE CENTER OF THE APPROACH OPENING WHICH IS AT THE EDGE OF PAVEMENT OR BACK OF CURB. A PUBLIC APPROACH STATION OCCURS WHERE THE PUBLIC APPROACH CENTERLINE INTERSECTS THE HIGHWAY CENTERLINE.
12. NOT TO SCALE.

APPROACH GRADE TABLE

TRAFFIC TYPE	GRADE PARAMETER G1 (RANGE)	GRADE PARAMETER G2 (MAX.)	MAX. CHANGE IN GRADE C (*e)	MINIMUM LENGTH L1
HIGH VOLUME (COMMERCIAL, INDUSTRIAL)	-2% TO -3%	(+/-) 5%	(+/-) 3%	40'
LOW VOLUME (COMMERCIAL, INDUSTRIAL)	-2% TO -5%	(+/-) 8%	(+/-) 6%	40'
SINGLE RESIDENTIAL, FARMYARD, FIELD	-2% TO -8%	(+/-) 15% * g	VEHICLE CLEARANCE	10'
MULTIPLE RESIDENTIAL	-2% TO -8%	(+/-) 15% * g	(+/-) 6%	20'
PUBLIC ROAD	-2%	* f	(+/-) 2%	20'

(*a) STANDARD APPROACH WIDTH TABLE

	POSTED SPEED (mph)	≤35		>35	
	MIN./MAX. WIDTH	MIN.	MAX.	MIN.	MAX.
APPR. TYPE	MULTIPLE RESIDENTIAL	28'	40'	28'	40'
	SINGLE RESIDENTIAL, FARMYARD, FIELD	12'	40'	20'	40'
	COMMERCIAL (ONE-WAY)	15'	30'	20'	30'
	COMMERCIAL (TWO-WAY)	25'	40'	25'	40'
	PUBLIC ROAD	28'	N/A	28'	N/A

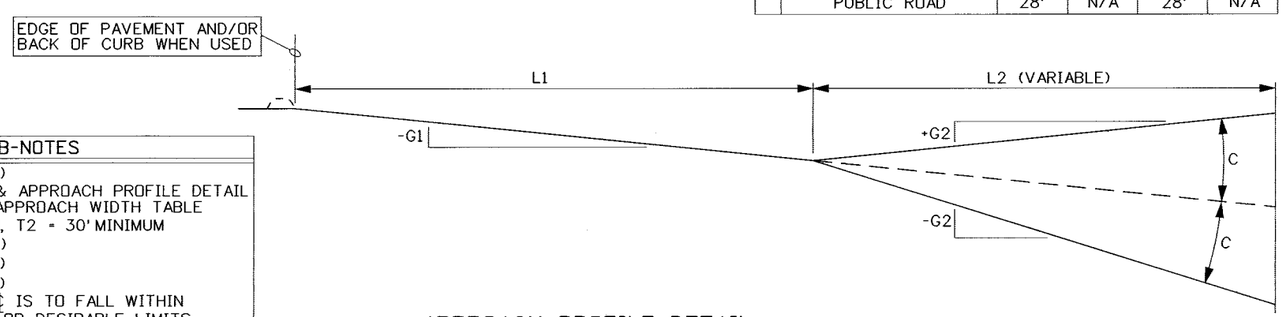

APPROACH PROFILE DETAIL

SUB-NOTES

- * a (SEE NOTE NO. 2)
- * b SEE NOTE NO. 1 & APPROACH PROFILE DETAIL
- * c SEE STANDARD APPROACH WIDTH TABLE
- * d T1 = 20' MINIMUM, T2 = 30' MINIMUM
- * e (SEE NOTE NO. 4)
- * f (SEE NOTE NO. 5)
- * g (SEE NOTE NO. 6)
- * h THE APPROACH ℄ IS TO FALL WITHIN THE ALLOWABLE OR DESIRABLE LIMITS. THE DESIRABLE LIMIT IS CONSIDERED THE "SAFEST OPTION".

REVISIONS

NO.	DATE	BY	NO.	DATE	BY	NO.	DATE	BY
1	1-00	MSM	6	12-05	MSM			
2	1-02	MSM	7	6-07	MSM			
3	7-02	MSM						
4	10-02	MSM						
5	8-04	MSM						

SCALES SHOWN ARE FOR 11" X 17" PRINTS ONLY

CADD FILE NAME h4a_0607.std

DRWG. ORIG. DATE: SEPTEMBER, 1993

IDAHO TRANSPORTATION DEPARTMENT

BOISE IDAHO

ASSISTANT CHIEF ENGINEER (DEVELOPMENT)

CHIEF ENGINEER

STANDARD DRAWING

RURAL APPROACHES (PRIVATE, COMMERCIAL, & PUBLIC)

English

STANDARD DRWG. NO.

H-4-A

SHEET 1 OF 1

PROFESSIONAL ENGINEER * LAND SURVEYOR * REGISTERED 2240 6-19-07 STATE OF IDAHO MILFORD MILLER

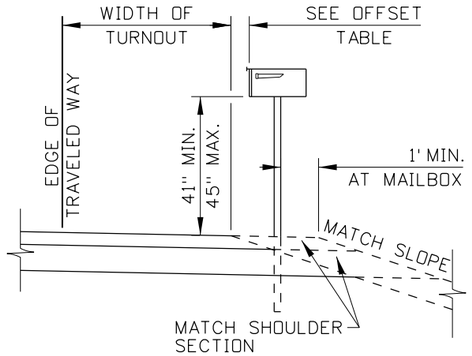

INSTALLATION AT MAILBOX TURNOUT

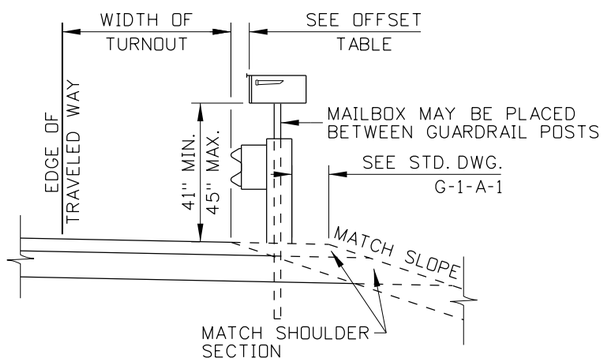

INSTALLATION BEHIND GUARDRAIL

THROUGH ROAD SPEED (MPH)	* D1 (FT.)	
	$nV_cV_m \leq 4000$	$nV_cV_m > 4000$
35	65	200
≥ 55	65	295

THROUGH ROAD SPEED (MPH)	* D2 (FT.)		
	$\frac{V_c}{1.5n-0.5} \leq 50$	$50 < \frac{V_c}{1.5n-0.5} \leq 400$	$\frac{V_c}{1.5n-0.5} > 400$
35	65	100	100
≥ 55	150	150	200

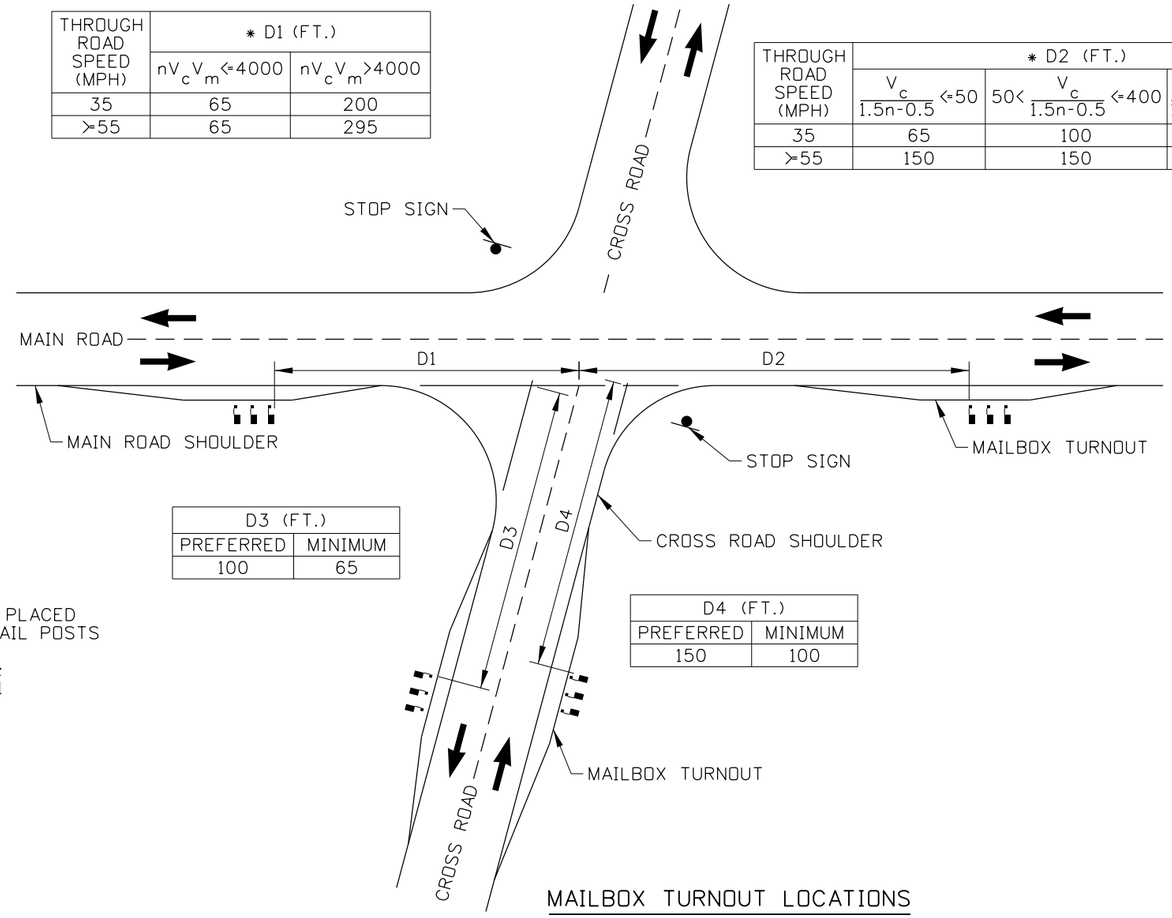

D3 (FT.)	
PREFERRED	MINIMUM
100	65

D4 (FT.)	
PREFERRED	MINIMUM
150	100

MAILBOX TURNOUT LOCATIONS

* n = NUMBER OF MAILBOXES AT MAIL STOP
V_c = ADT ON CROSS ROAD
V_m = ADT ON MAIN ROAD

TURNOUT WIDTH AND MAILBOX OFFSET TABLE				
ADT	TURNOUT WIDTH (FT.)		MAILBOX OFFSET (IN.)	
	PREFERRED	MINIMUM	PREFERRED	MINIMUM
>10,000	>12	8	6 TO 8	0
1,500 TO 10,000	12	8		
400 TO 1,500	10	8		
<400	8	6		6
RESIDENTIAL STREET (NO CURB)	6	0		
RESIDENTIAL STREET (WITH CURB)	NOT APPLICABLE		8 TO 12	6

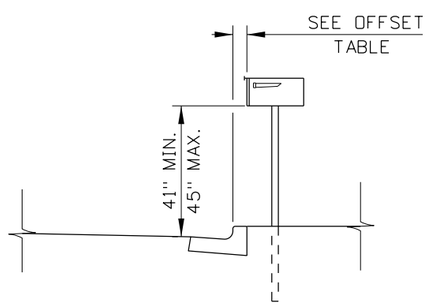

INSTALLATION ON CURBED RESIDENTIAL STREET

TYPICAL MAILBOX INSTALLATIONS

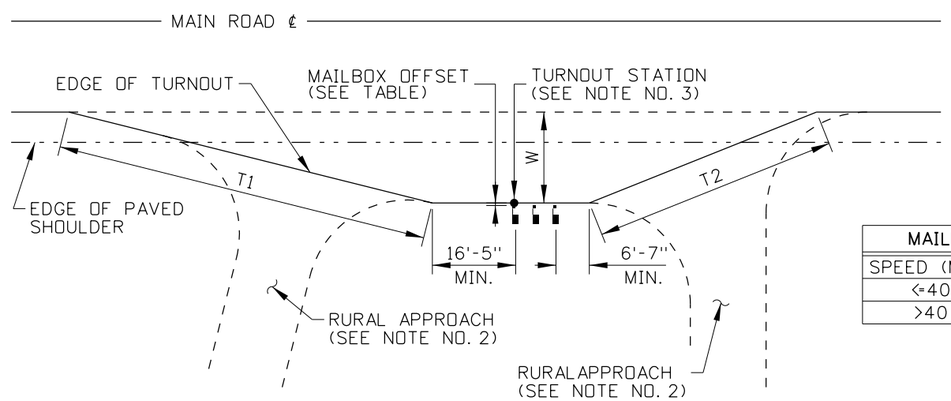

MAILBOX TURNOUT

MAILBOX TAPER		
SPEED (MPH)	T1	T2
≤ 40	4:1	2.5:1
>40	20:1	12:1

NOTES

1. LOCATE MAILBOX TURNOUT SO THAT THE TAPERS DO NOT OVERLAP THE INTERSECTION CURVE RADII.

2. CONSTRUCT MAILBOX ASSEMBLIES IN ACCORDANCE WITH STANDARD DRAWING H-5-A. CONSTRUCT RURAL APPROACHES IN ACCORDANCE WITH STANDARD DRAWING H-4-A.

3. MEASURE MAILBOX TURNOUT STATION AND OFFSET AT THE EDGE OF THE TURNOUT PERPENDICULAR TO THE FIRST MAILBOX.

4. NOT TO SCALE.

ORIGINAL STORED AT: ITD, Headquarters 3311 West State Boise, Idaho

ORIGINAL SIGNED BY: RYAN D. LANCASTER DATE ORIGINAL SIGNED: JANUARY 31, 2013

REVISIONS								
NO.	DATE	BY	NO.	DATE	BY	NO.	DATE	BY
1	11-02	MSM						
2	06-05	MSM						
3	01-13	RDL						

SCALES SHOWN ARE FOR 11" X 17" PRINTS ONLY

CADD FILE NAME: h4b_0213.std

DRAWING DATE: SEPTEMBER, 1993

IDAHO TRANSPORTATION DEPARTMENT

BOISE IDAHO

ORIGINAL SIGNED BY: LOREN THOMAS
HIGHWAYS PROGRAM OVERSIGHT ENGINEER
ORIGINAL SIGNED BY: TOM COLE
CHIEF ENGINEER

STANDARD DRAWING

MAILBOX TURNOUT & INSTALLATION

REQUIRES STD. DWG. H-4-A

English

STANDARD DRAWING NO.

H-4-B

SHEET 1 OF 1

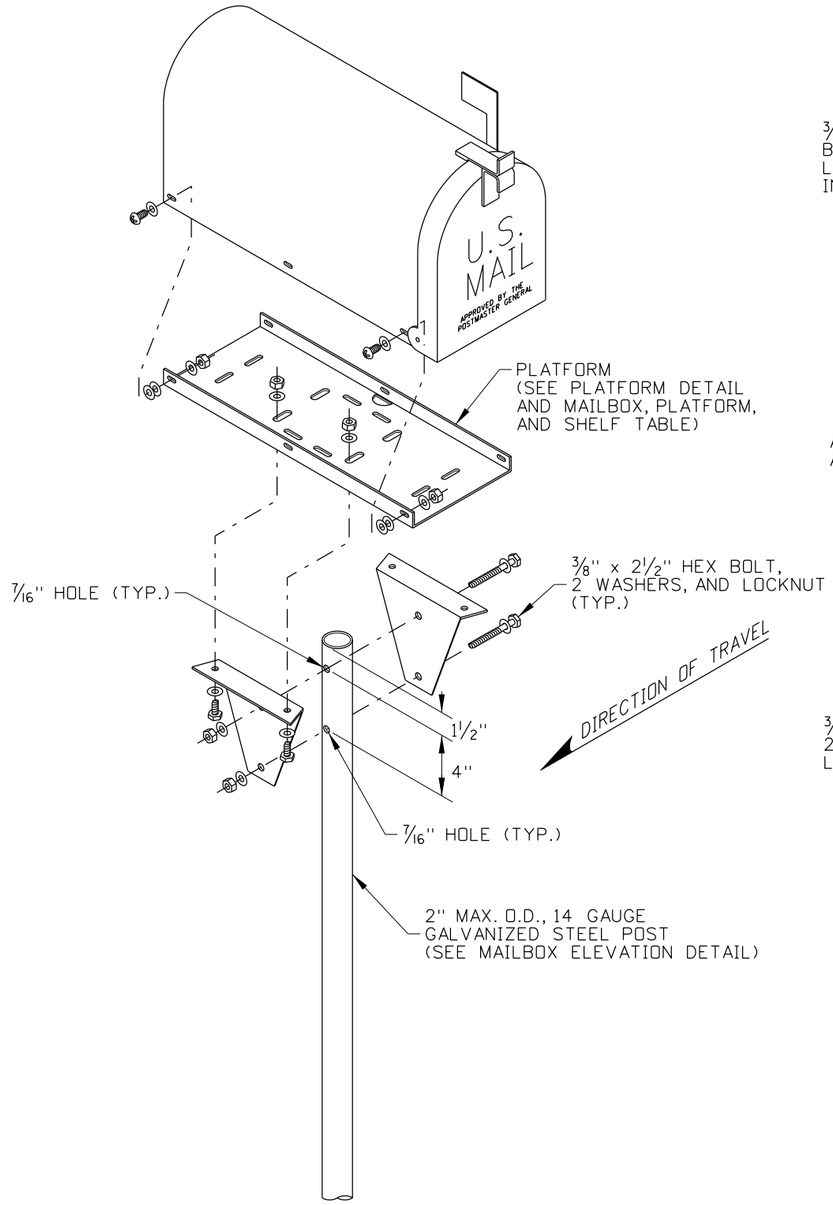

TYPE A ASSEMBLY
STEEL TUBE POST

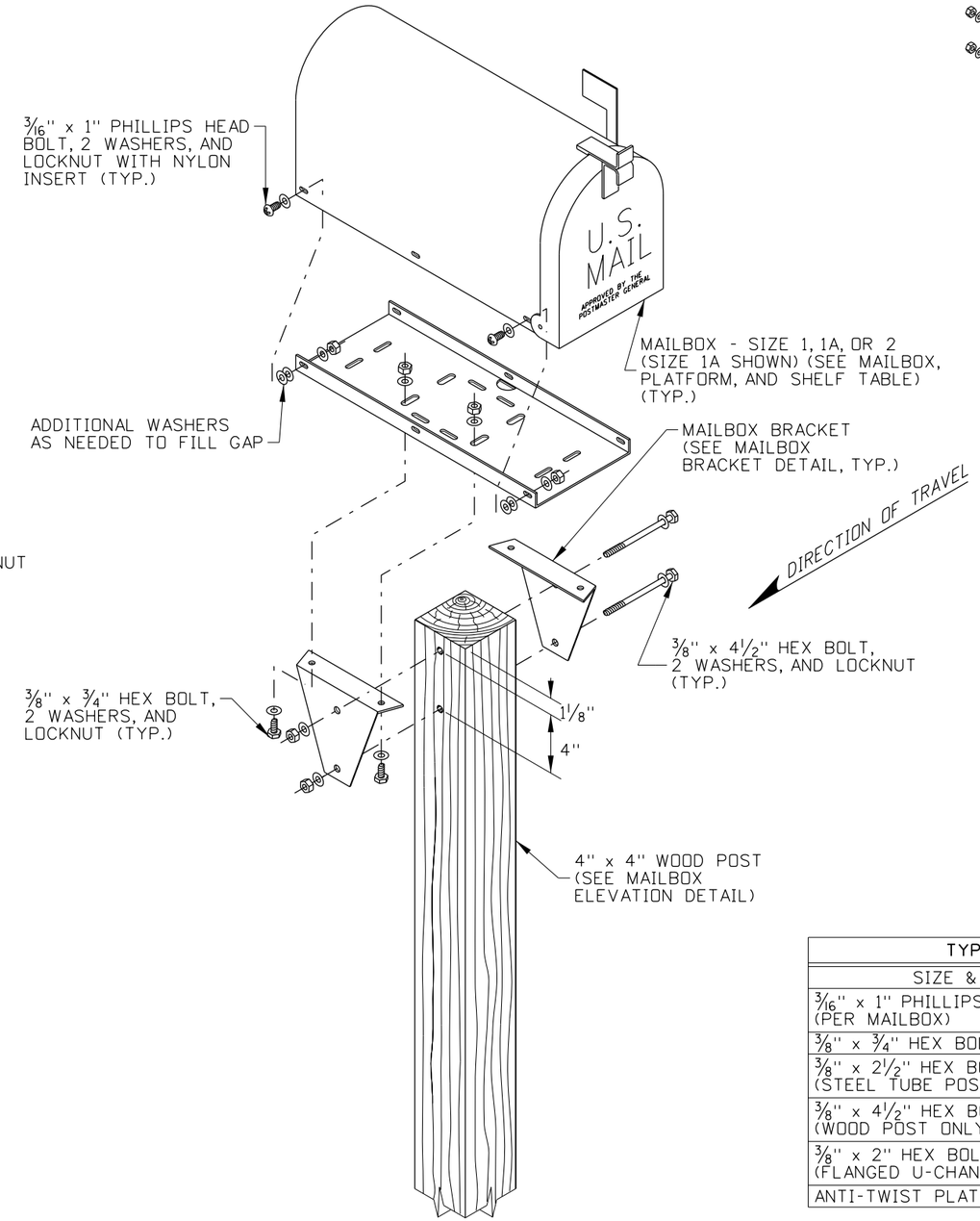

TYPE A ASSEMBLY
WOOD POST

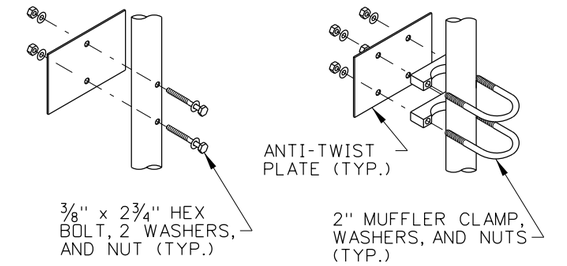

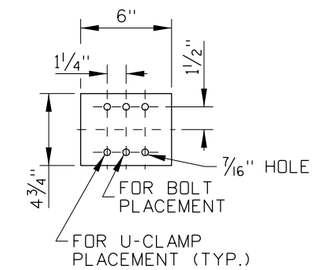

ANTI-TWIST PLATE DETAIL

TYPE A ASSEMBLY FASTENERS TABLE			
SIZE & TYPE	QUANTITY	WASHERS	LOCKNUTS
3/16" x 1" PHILLIPS HEAD BOLTS (PER MAILBOX)	4 MIN.	8 MIN.	4 MIN.
3/8" x 3/4" HEX BOLT (BRACKET)	4	8	4
3/8" x 2 1/2" HEX BOLT (STEEL TUBE POST ONLY)	2	4	2
3/8" x 4 1/2" HEX BOLT (WOOD POST ONLY)	2	4	2
3/8" x 2" HEX BOLT (FLANGED U-CHANNEL POST ONLY)	2	4	2
ANTI-TWIST PLATE ASSEMBLY	SEE ANTI-TWIST PLATE DETAIL		

ORIGINAL STORED AT: ITD, Headquarters 3311 West State Boise, Idaho

ORIGINAL SIGNED BY: RYAN D. LANCASTER
DATE ORIGINAL SIGNED: JANUARY 31, 2013

REVISIONS								
NO.	DATE	BY	NO.	DATE	BY	NO.	DATE	BY
1	7-92	MSM	6	7-10	MGL			
2	7-02	MSM	7	11-11	TEM			
3	7-05	MSM	8	01-13	RDL			
4	12-05	MSM						
5	10-08	JRV						

SCALES SHOWN ARE FOR 11" X 17" PRINTS ONLY

CADD FILE NAME: h5a_0213.std

DRAWING DATE: SEPTEMBER, 1993

IDAHO TRANSPORTATION DEPARTMENT

BOISE IDAHO

ORIGINAL SIGNED BY: LOREN THOMAS
HIGHWAYS PROGRAM OVERSIGHT ENGINEER

ORIGINAL SIGNED BY: TOM COLE
CHIEF ENGINEER

STANDARD DRAWING

MAILBOX ASSEMBLIES & MOUNTING HARDWARE

REQUIRES SHEETS 2 OF 5, 3 OF 5, 4 of 5, 5 OF 5, & STD. DWGS. G-3-A & H-4-B

English

STANDARD DRAWING NO.

H-5-A

SHEET 1 OF 5

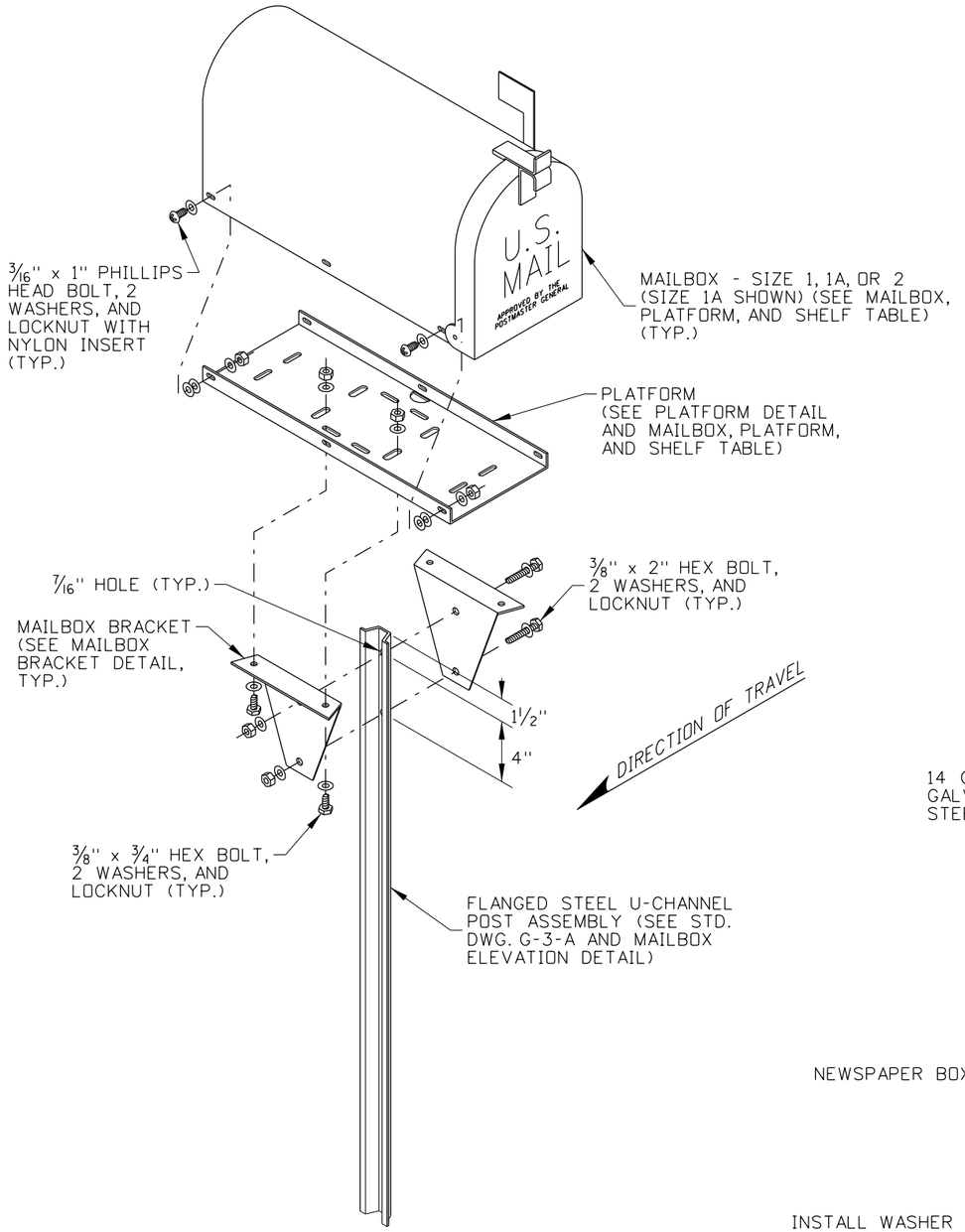

TYPE A ASSEMBLY

FLANGED STEEL U-CHANNEL POST (2 LB/FT)

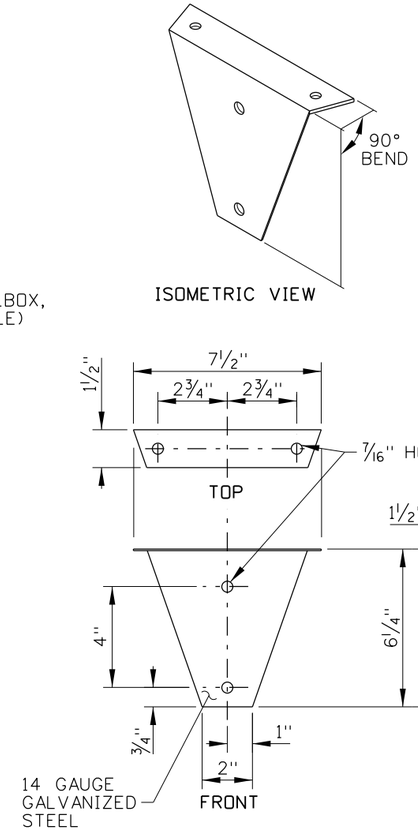

MAILBOX BRACKET DETAIL

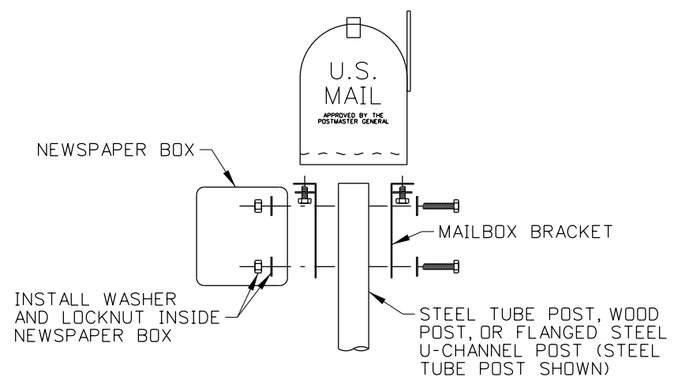

NEWSPAPER BOX DETAIL

TYPE A ASSEMBLY

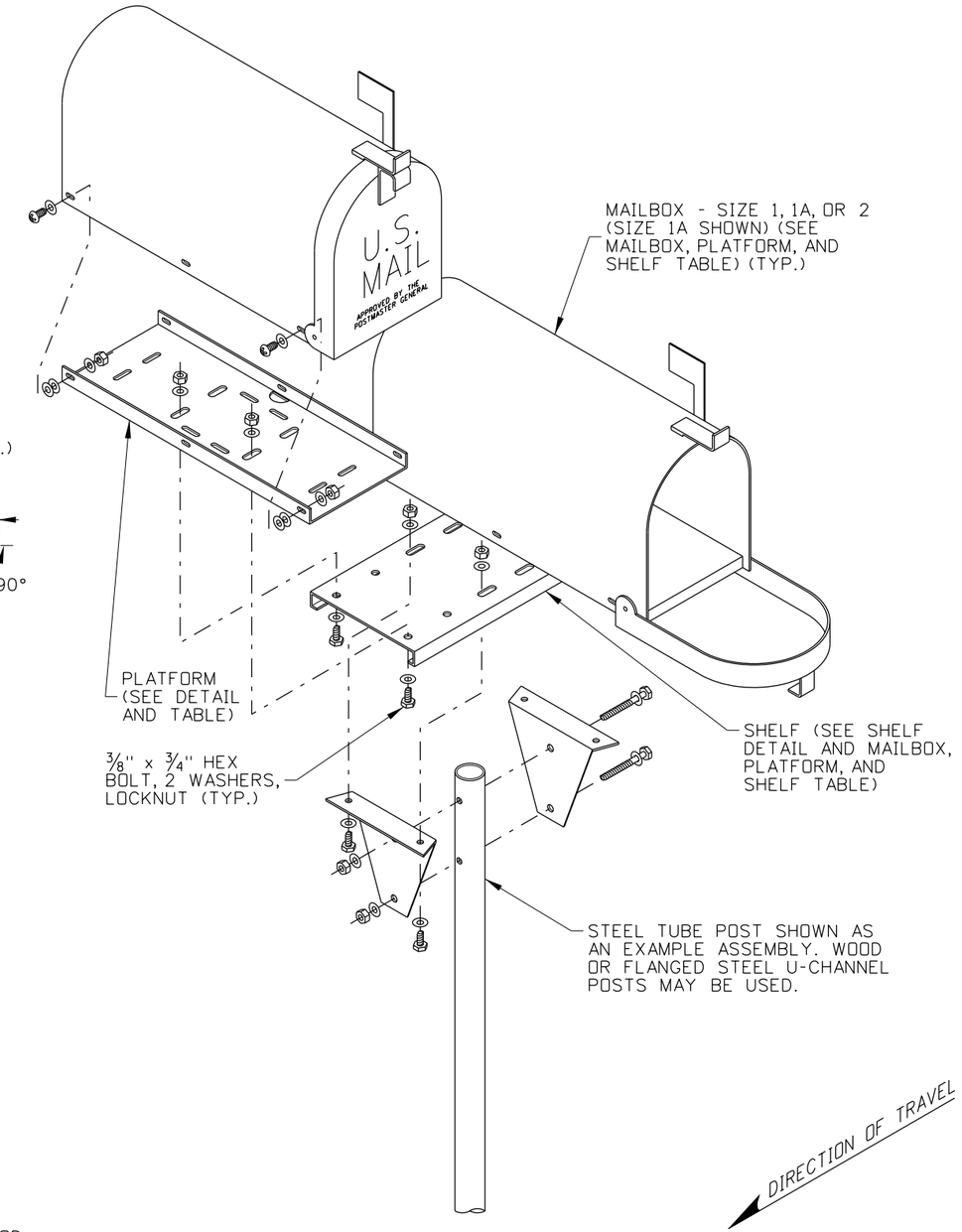

TYPE A ASSEMBLY

DOUBLE MAILBOX ASSEMBLY

ORIGINAL STORED AT: ITD, Headquarters 3311 West State Boise, Idaho

ORIGINAL SIGNED BY: RYAN D. LANCASTER
DATE ORIGINAL SIGNED: JANUARY 31, 2013

REVISIONS								
NO.	DATE	BY	NO.	DATE	BY	NO.	DATE	BY
1	7-92	MSM	6	7-10	MGL			
2	7-02	MSM	7	11-11	TEM			
3	7-05	MSM	8	01-13	RDL			
4	12-05	MSM						
5	10-08	JRV						

SCALES SHOWN ARE FOR 11" X 17" PRINTS ONLY

CADD FILE NAME: h5a_0213.std

DRAWING DATE: SEPTEMBER, 1993

IDAHO TRANSPORTATION DEPARTMENT

BOISE IDAHO

ORIGINAL SIGNED BY: LOREN THOMAS
HIGHWAYS PROGRAM OVERSIGHT ENGINEER
ORIGINAL SIGNED BY: TOM COLE
CHIEF ENGINEER

STANDARD DRAWING

MAILBOX ASSEMBLIES & MOUNTING HARDWARE

REQUIRES SHEETS 1 OF 5, 3 OF 5, 4 of 5, 5 OF 5, & STD. DWGS. G-3-A & H-4-B

English

STANDARD DRAWING NO.

H-5-A

SHEET 2 OF 5

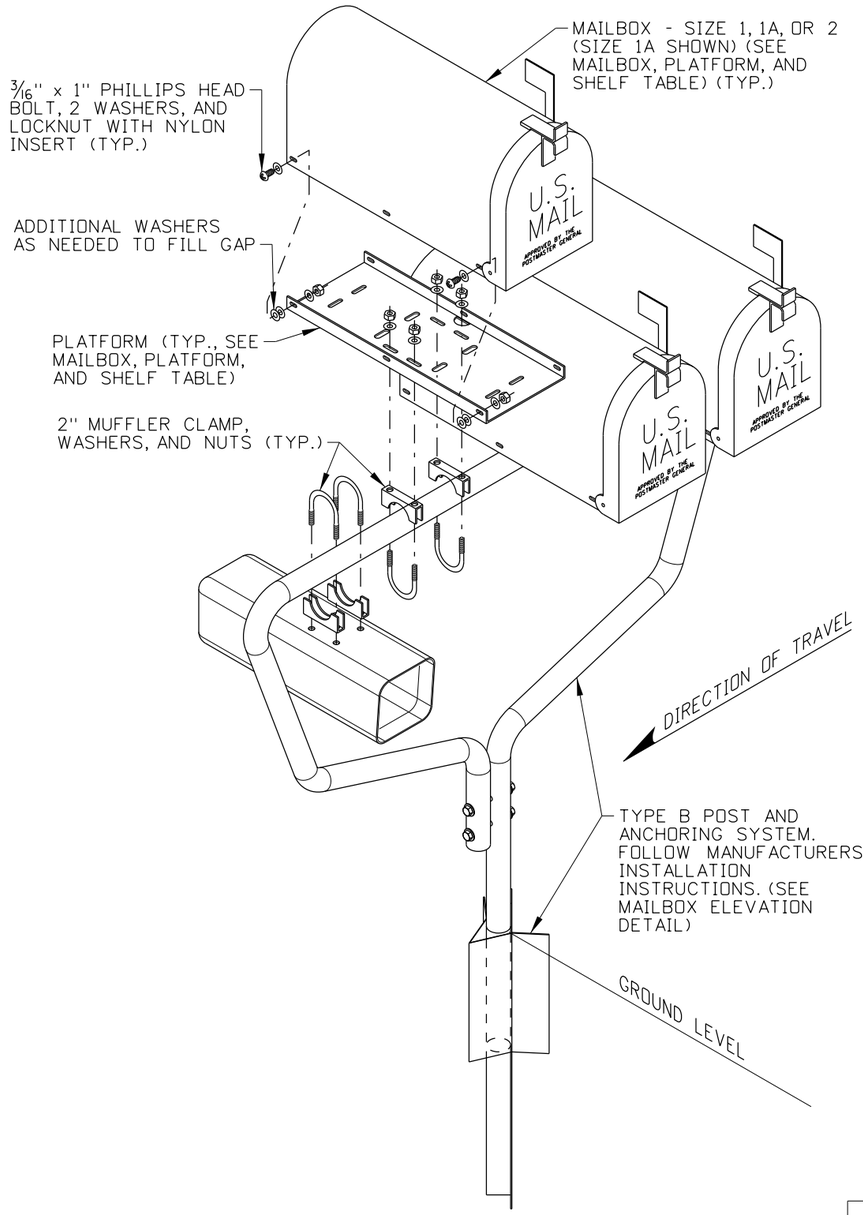

TYPE B ASSEMBLY

TYPE B ASSEMBLY FASTENERS TABLE			
SIZE & TYPE	QUANTITY	WASHERS	LOCKNUTS/NUTS
3/16" x 1" PHILLIPS HEAD BOLT (PER MAILBOX)	4 MIN.	8 MIN.	4 MIN.
2" MUFFLER CLAMP (PER MAILBOX)	2	4	4
2" MUFFLER CLAMP (PER NEWSPAPER BOX)	2	4	2
3/8" x 4 3/4" HEX BOLT (WOOD POST ONLY)	2	4	2
TYPE 2 POST AND ANCHORING SYSTEM	SEE MANUFACTURERS INSTALLATION INSTRUCTIONS		

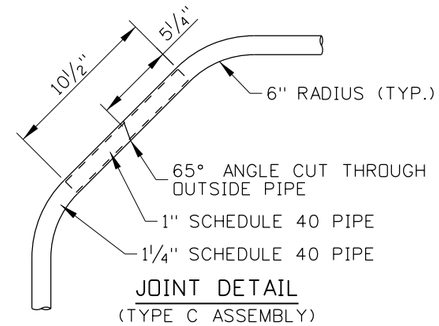

JOINT DETAIL
(TYPE C ASSEMBLY)

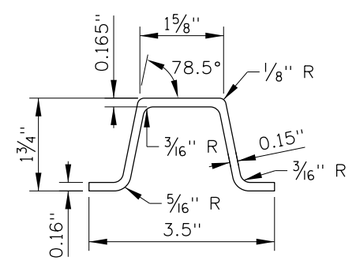

FLANGED CHANNEL DETAIL
3 LB/FT
(TYPE C ASSEMBLY)

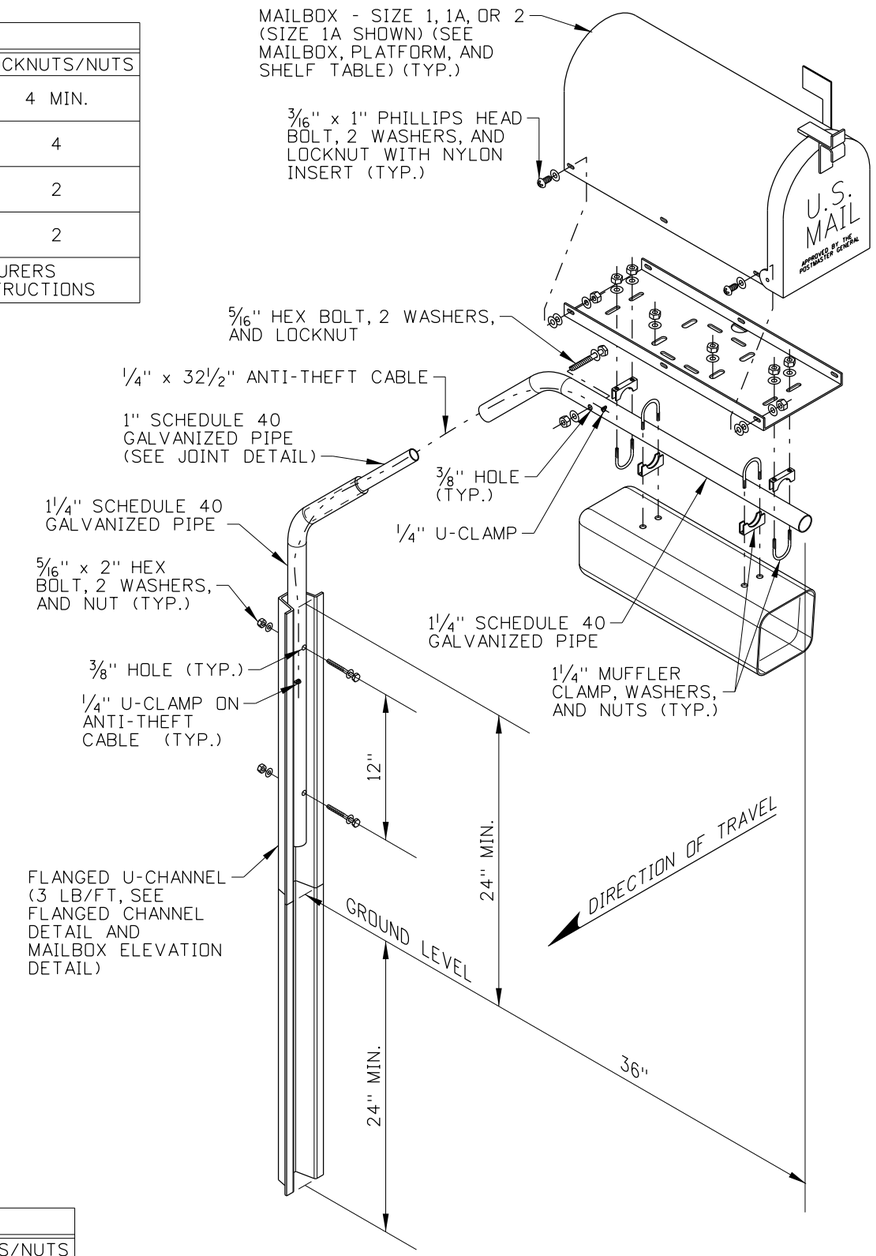

TYPE C ASSEMBLY

TYPE C ASSEMBLY FASTENERS TABLE			
SIZE & TYPE	QUANTITY	WASHERS	LOCKNUTS/NUTS
3/16" x 1" PHILLIPS HEAD BOLT	4 MIN.	8 MIN.	4 MIN.
1 1/4" MUFFLER CLAMP	2	4	4
5/16" x 2" HEX BOLT	3	6	3
1/4" U-CLAMP	2	0	4

ORIGINAL STORED AT: ITD, Headquarters 3311 West State Boise, Idaho

ORIGINAL SIGNED BY: RYAN D. LANCASTER
DATE ORIGINAL SIGNED: JANUARY 31, 2013

REVISIONS								
NO.	DATE	BY	NO.	DATE	BY	NO.	DATE	BY
1	7-92	MSM	6	7-10	MGL			
2	7-02	MSM	7	11-11	TEM			
3	7-05	MSM	8	01-13	RDL			
4	12-05	MSM						
5	10-08	JRV						

SCALES SHOWN ARE FOR 11" X 17" PRINTS ONLY

CADD FILE NAME: h5a_0213.std

DRAWING DATE: SEPTEMBER, 1993

IDAHO TRANSPORTATION DEPARTMENT

BOISE IDAHO

ORIGINAL SIGNED BY: LOREN THOMAS
HIGHWAYS PROGRAM OVERSIGHT ENGINEER
ORIGINAL SIGNED BY: TOM COLE
CHIEF ENGINEER

STANDARD DRAWING

MAILBOX ASSEMBLIES & MOUNTING HARDWARE

REQUIRES SHEETS 1 OF 5, 2 OF 5, 4 of 5, 5 OF 5, & STD. DWGS. G-3-A & H-4-B

English

STANDARD DRAWING NO.

H-5-A

SHEET 3 OF 5

MAILBOX, PLATFORM, AND SHELF TABLE						
MAILBOX SIZE	MAILBOX DIMENSIONS			PLATFORM DIMENSION		SHELF DIM.
	L	W	H	L_P	W_P	L_S
1	19"	6½"	8½"	17"	6"	15"
1-A	21"	8"	10½"	19"	7½"	16½"
2	23½"	11½"	13½"	21"	11"	20"

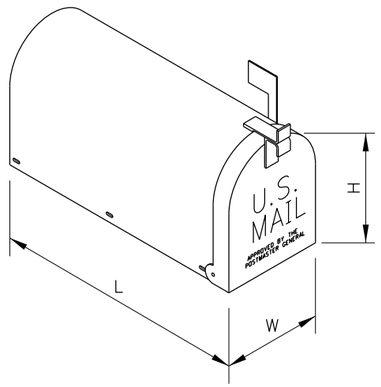

MAILBOX DIMENSIONS

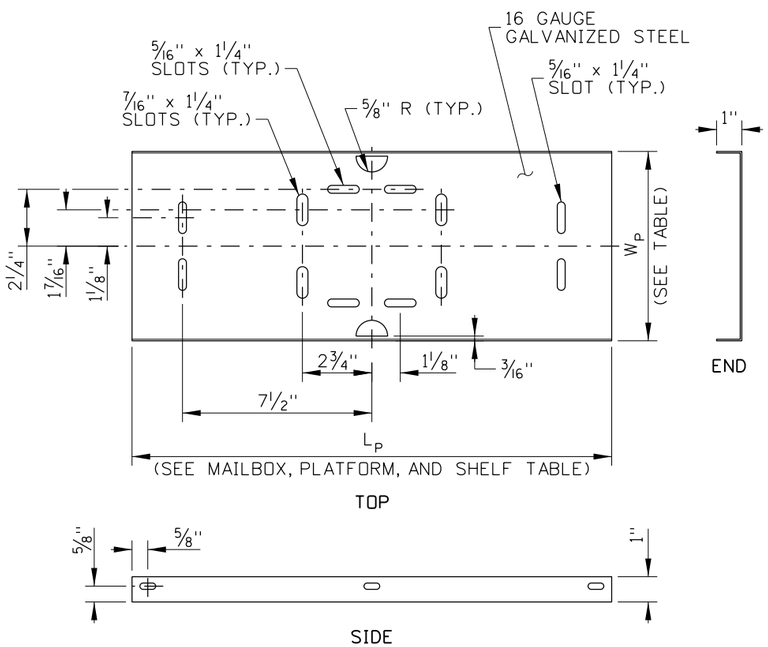

PLATFORM DETAIL

(ONE-PIECE)

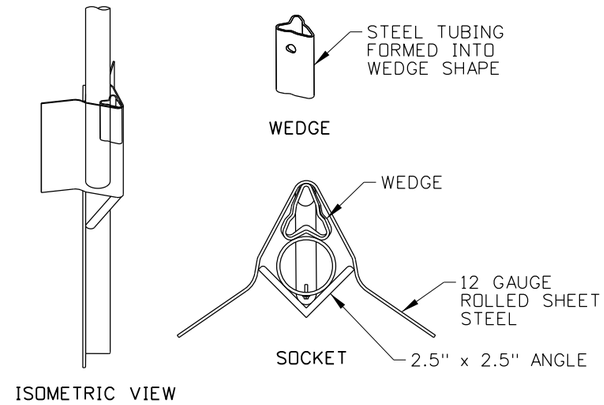

SOCKET AND WEDGE MAILBOX SUPPORT SYSTEM DETAIL

FOR USE WITH TYPE B ASSEMBLY
MAY BE USED WITH TYPE A - STEEL TUBE POST ASSEMBLY
(SEE MANUFACTURER'S INSTALLATION INSTRUCTIONS)

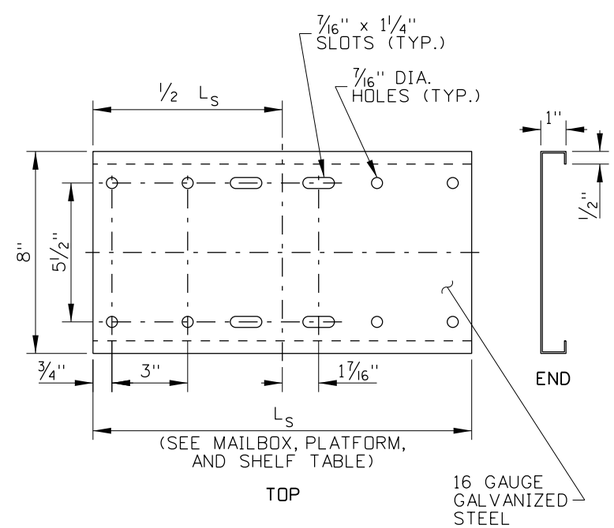

SHELF DETAIL

(FOR TYPE A DOUBLE MAILBOX ASSEMBLIES)

NOTES

1. CONSTRUCT MAILBOX ASSEMBLIES IN ACCORDANCE WITH SECTION 634 - MAILBOX OF THE STANDARD SPECIFICATIONS FOR HIGHWAY CONSTRUCTION.

2. SEE STANDARD DRAWING H-4-B FOR MAILBOX PLACEMENT.

3. INSTALL THE MAILBOXES AND ASSEMBLIES WITH THE FASTENERS SHOWN IN THE ASSEMBLY FASTENER TABLES. SOME PLATFORM SLOTS AND HOLES MAY REMAIN UNUSED.

4. CENTER THE MAILBOX ON THE PLATFORM AND ENSURE THAT THE MAILBOX DOOR OPENS. SPACING OF MAILBOX MOUNTING HOLES MAY VARY BETWEEN MANUFACTURERS AND ADDITIONAL HOLES MAY BE DRILLED IN THE MAILBOX, PLATFORM, OR BOTH TO ATTACH THE MAILBOX TO THE PLATFORM.

5. COMMERCIALLY AVAILABLE MAILBOXES AND MAILBOX ASSEMBLIES MAY BE SUBSTITUTED FOR THOSE SHOWN IF THEY MEET THE REQUIREMENTS OF THE U.S. POSTMASTER GENERAL AND HAVE SUCCESSFULLY PASSED THE TESTING REQUIREMENTS OF MASH OR NCHRP 350. ADJUSTABLE PLATFORM ALTERNATIVES AND THE SOCKET AND WEDGE MAILBOX SUPPORT SYSTEM ARE EXAMPLES OF COMMERCIALLY AVAILABLE PROPRIETARY SYSTEMS THAT MAY BE ACCEPTABLE ALTERNATIVES. OBTAIN THE ENGINEER'S APPROVAL BEFORE INSTALLING ALTERNATIVE MAILBOXES OR ASSEMBLIES AND INSTALL IN ACCORDANCE WITH THE MANUFACTURERS INSTRUCTIONS.

6. USE AN ANTI-TWIST PLATE, SHOWN ON THE ANTI-TWIST PLATE DETAIL. A SOCKET AND WEDGE MAILBOX SUPPORT SYSTEM MAY BE USED IN LIEU OF AN ANTI-TWIST PLATE. IF THE SOCKET AND WEDGE SYSTEM IS USED, FOLLOW THE MANUFACTURER'S INSTALLATION INSTRUCTIONS.

7. THE TYPE C ASSEMBLY SHOULD BE USED IN HEAVY SNOW AREAS OR AREAS WHERE SNOW PLOW DAMAGE TO MAILBOXES HAS BEEN OBSERVED OR IS ANTICIPATED.

8. WHEN USED IN HEAVY SNOW AREAS, ONLY ONE MAILBOX IS RECOMMENDED FOR TYPE A ASSEMBLIES. THE TYPE A ASSEMBLY WITH WOOD POSTS IS RECOMMENDED FOR USE IN HEAVY SNOW AREAS. A SNOW SHIELD MAY BE INSTALLED AS SHOWN ON STANDARD DRAWING H-5-B.

9. MAILBOX SIZES 1, 1A, AND 2, SHOWN IN THE MAILBOX, PLATFORM, AND SHELF TABLE MAY BE INSTALLED ON THE TYPE A DOUBLE MAILBOX ASSEMBLY IN ANY COMBINATION OF SIZES. WHEN MORE THAN ONE SIZE IS TO BE INSTALLED, USE THE SHELF SIZE FOR THE LARGER MAILBOX.

10. THE TYPE B ASSEMBLY IS A PROPRIETARY SYSTEM THAT MAY BE USED FOR THE INSTALLATION OF TWO OR MORE MAILBOXES. ON TYPE B MAILBOX ASSEMBLIES, INSTALL A MAXIMUM OF FIVE SIZE 1 MAILBOXES, FOUR SIZE 1A MAILBOXES, OR THREE SIZE 2 MAILBOXES. WHEN MORE THAN ONE SIZE IS TO BE INSTALLED, LIMIT THE NUMBER OF MAILBOXES TO THE MAXIMUM NUMBER FOR THE LARGEST SIZE USED.

11. DO NOT INSTALL THE MAILBOX ASSEMBLY IN A CONCRETE FOUNDATION. AN EXCEPTION MAY BE MADE FOR MASH OR NCHRP 350 APPROVED ALTERNATIVE MAILBOX ASSEMBLIES IN ACCORDANCE WITH THE MANUFACTURER'S INSTALLATION INSTRUCTIONS.

12. ENSURE THAT PLATFORM, SHELF, AND BRACKETS ARE GALVANIZED IN ACCORDANCE WITH AASHTO M 232.

13. IF USED, ATTACH THE NEWSPAPER BOX TO THE SUPPORT, DIRECTLY UNDER THE MAILBOX. ENSURE THAT NEWSPAPER BOXES DO NOT EXTEND BEYOND THE FRONT OF THE MAILBOX WHEN THE MAILBOX DOOR IS CLOSED. IN HEAVY SNOW AREAS, LOCATE THE NEWSPAPER BOX ON THE TRAILING SIDE OF THE MAILBOX POST. SEE THE NEWSPAPER BOX DETAIL FOR INSTALLATIONS ON TYPE A MAILBOX ASSEMBLIES.

14. ROUND OR GRIND THE CORNERS OF PLATFORMS, SHELVES, BRACKETS, OR OTHER HARDWARE THAT HAS SHARP PROTRUDING EDGES.

15. NOT TO SCALE.

ORIGINAL STORED AT: ITD, Headquarters 3311 West State Boise, Idaho

ORIGINAL SIGNED BY: RYAN D. LANCASTER DATE ORIGINAL SIGNED: JANUARY 31, 2013

REVISIONS								
NO.	DATE	BY	NO.	DATE	BY	NO.	DATE	BY
1	7-92	MSM	6	7-10	MGL			
2	7-02	MSM	7	11-11	TEM			
3	7-05	MSM	8	01-13	RDL			
4	12-05	MSM						
5	10-08	JRV						

SCALES SHOWN ARE FOR 11" X 17" PRINTS ONLY

CADD FILE NAME: h5a_0213.std

DRAWING DATE: SEPTEMBER, 1993

IDAHO TRANSPORTATION DEPARTMENT

BOISE IDAHO

ORIGINAL SIGNED BY: LOREN THOMAS
HIGHWAYS PROGRAM OVERSIGHT ENGINEER
ORIGINAL SIGNED BY: TOM COLE
CHIEF ENGINEER

STANDARD DRAWING

MAILBOX ASSEMBLIES & MOUNTING HARDWARE

REQUIRES SHEETS 1 OF 5, 2 OF 5, 3 OF 5, 5 OF 5, & STD. DWGS. G-3-A & H-4-B

English

STANDARD DRAWING NO.

H-5-A

SHEET 4 OF 5

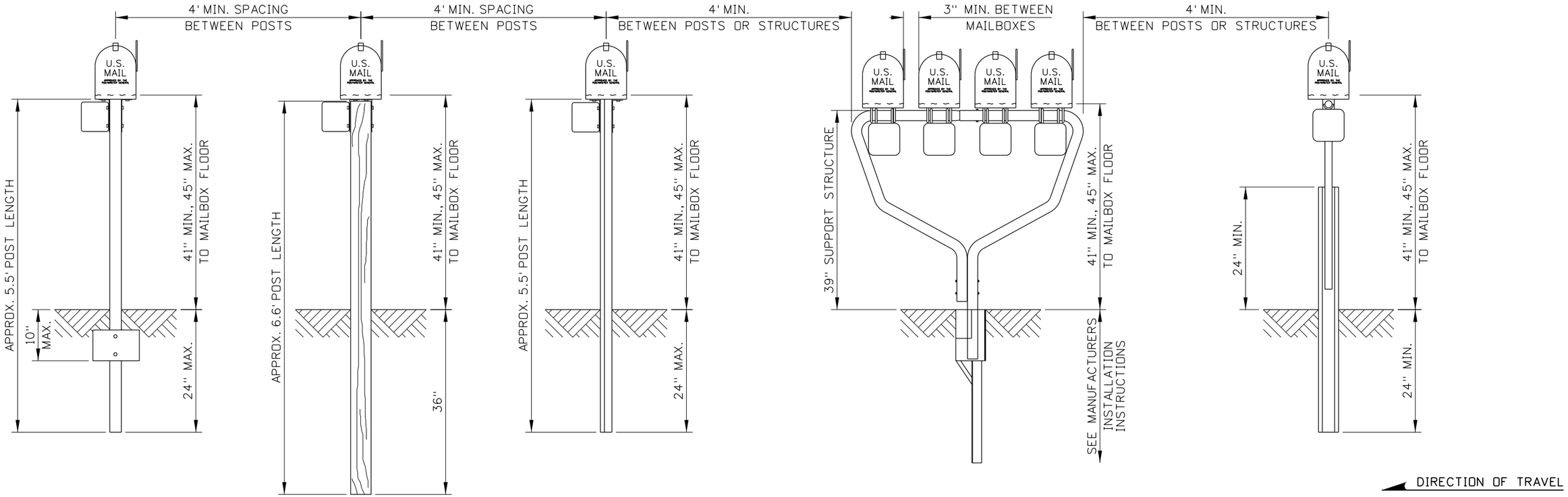

TYPE A ASSEMBLY
STEEL TUBE POST

TYPE A ASSEMBLY
WOOD POST

TYPE A ASSEMBLY
FLANGED STEEL U-CHANNEL POST

TYPE B ASSEMBLY

TYPE C ASSEMBLY

MAILBOX ELEVATION DETAIL

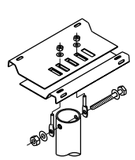

SINGLE MAILBOX ASSEMBLY
(FOR MAILBOXES
SIZES 1 AND 1A)

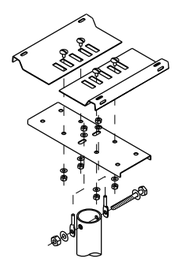

SINGLE MAILBOX ASSEMBLY
(FOR MAILBOX SIZE 2)

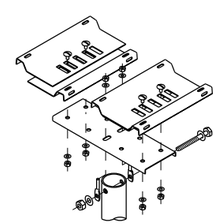

DOUBLE MAILBOX ASSEMBLY
(FOR MAILBOXES
SIZES 1 AND 1A)

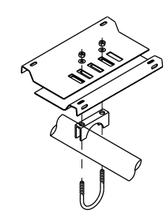

SINGLE MAILBOX ASSEMBLY
(FOR MAILBOXES
SIZES 1 AND 1A ON
TYPE 2 ASSEMBLIES)

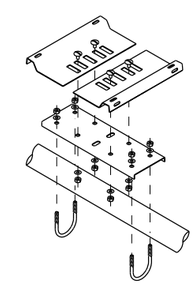

SINGLE MAILBOX ASSEMBLY
(FOR MAILBOX
SIZE 2 ON TYPE 2
ASSEMBLIES)

ADJUSTABLE PLATFORM ALTERNATIVES

ORIGINAL STORED
AT: ITD,
Headquarters
3311 West State
Boise, Idaho

ORIGINAL SIGNED BY:
RYAN D. LANCASTER
DATE ORIGINAL SIGNED:
JANUARY 31, 2013

REVISIONS

NO.	DATE	BY	NO.	DATE	BY	NO.	DATE	BY
1	7-92	MSM	6	7-10	MGL			
2	7-02	MSM	7	11-11	TEM			
3	7-05	MSM	8	01-13	RDL			
4	12-05	MSM						
5	10-08	JRV						

SCALES SHOWN ARE FOR 11" X 17" PRINTS ONLY

CADD FILE NAME: h5a_0213.std

DRAWING DATE: SEPTEMBER, 1993

IDAHO TRANSPORTATION DEPARTMENT

BOISE IDAHO

ORIGINAL SIGNED BY: LOREN THOMAS
HIGHWAYS PROGRAM OVERSIGHT ENGINEER

ORIGINAL SIGNED BY: TOM COLE
CHIEF ENGINEER

STANDARD DRAWING

MAILBOX ASSEMBLIES & MOUNTING HARDWARE

REQUIRES SHEETS 1 OF 5, 2 OF 5, 3 OF 5, 4 of 5, & STD. DWGS. G-3-A & H-4-B

English

STANDARD DRAWING NO.

H-5-A

SHEET 5 OF 5

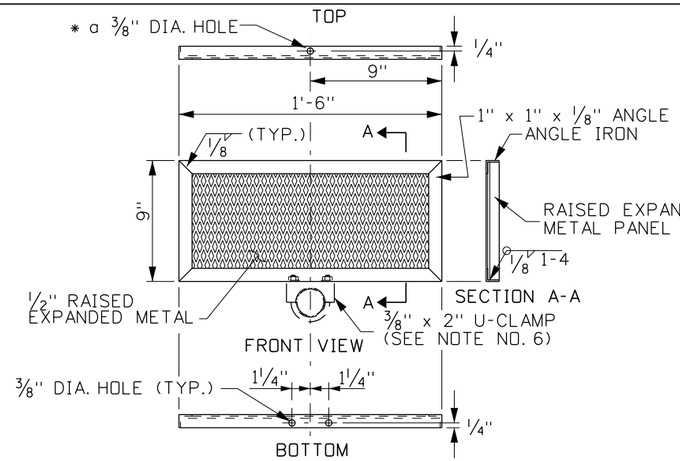

* a DRILL (1) 3/8" HOLE IN CENTER OF TOP-SIDE OF SNOW SHIELD FRAME TO FASTEN BRACE

SNOW SHIELD DETAILS

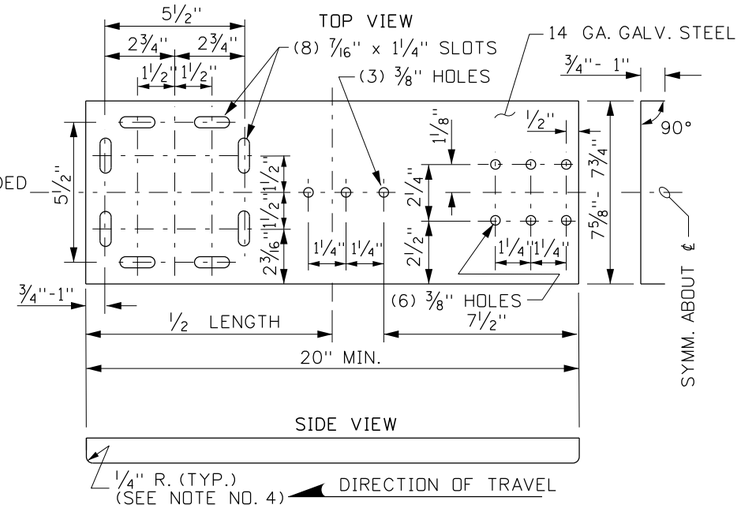

SNOW SHIELD ADAPTOR PLATE DETAILS

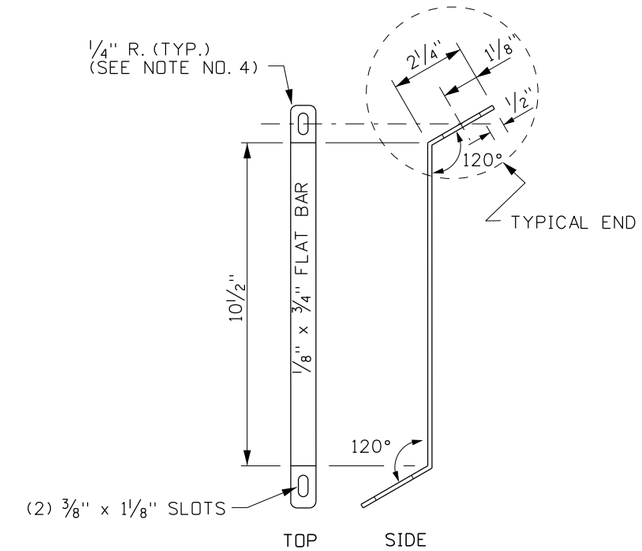

BRACE DETAILS

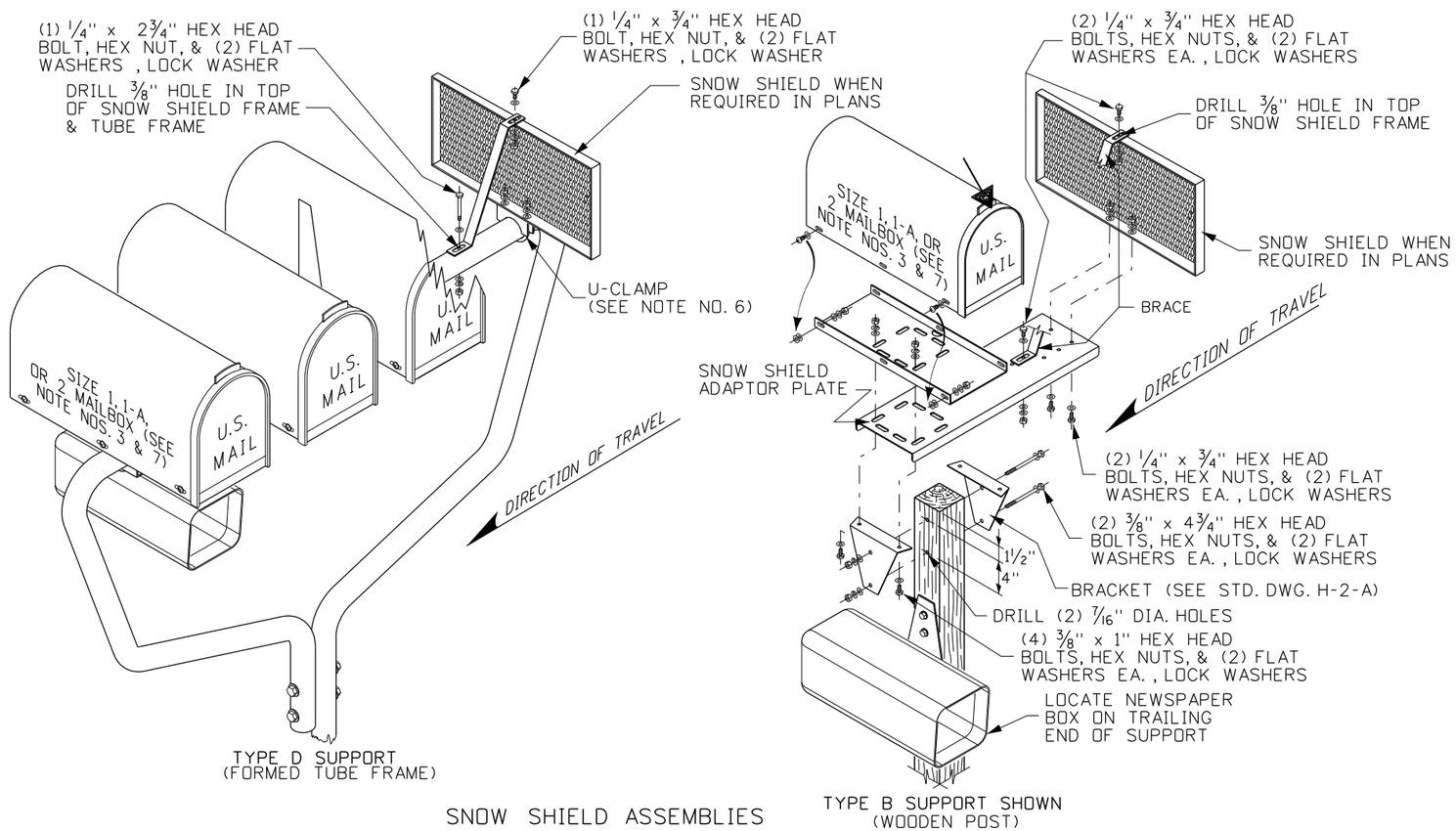

SNOW SHIELD ASSEMBLIES

GENERAL NOTES

1. ALL SNOW SHIELD MAILBOX HARDWARE INCLUDING SHIELD, BRACES, CLAMPS SUPPORTS, PLATFORMS, ADAPTOR PLATES, BRACKETS, BOLTS, NUTS, SCREWS, WASHERS, AND OTHER MISCELLANEOUS HARDWARE SHALL BE MEET ALL THE REQUIREMENTS OF STANDARD DRAWING H-5-A (MAILBOX ASSEMBLIES & MOUNTING HARDWARE).
2. WHEN NEW MAILBOX SUPPORTS ARE INSTALLED STANDARD DRAWING H-5-A IS REQUIRED, DRAWING H-5-A IS NOT REQUIRED FOR RETROFIT INSTALLATIONS ON EXISTING MAILBOX SUPPORTS.
3. WHEN A SNOW SHIELD IS INSTALLED ONLY (1) MAILBOX IS ALLOWED PER TYPE A, B, & C SUPPORTS. THE TYPE B SUPPORT (4' x 4" WOODEN POST) IS RECOMMENDED FOR HEAVY SNOW AREAS.
4. ROUND (GRIND DOWN) THE CORNERS OF ANY MAILBOX HARDWARE THAT HAS SHARP PROTRUDING EDGES. TAKE SPECIAL NOTICE TO THE UNDERSIDE OF ADAPTOR PLATES.
5. WHEN A TYPE A, B, OR C SUPPORT HAS A SNOW SHIELD AND A NEWS PAPER BOX, INSTALL THE NEWS PAPER BOX ON THE TRAILING FACE/END OF THE SUPPORT POST.
6. ALL U-CLAMPS DEPICTED (MUFFLER CLAMPS) SHALL BE A 1 7/8" OR 2" DIA. WITH 3/8" DIA. TREADED BOLT ENDS INCLUDING ROUND WASHERS, LOCK WASHERS, HEX NUTS AND APPROPRIATE U-CLAMP SADDLE.
7. WHEN A SNOW SHIELD IS USED ON SUPPORT TYPES A, B, & C SINGLE MOUNT (1) MAILBOX SIZE NOS. 1, 1-A, OR 2 AND ON THE TYPE D SUPPORT (FORMED TUBE FRAME) MOUNT NO MORE THAN (4) SIZE NO. 1 MAILBOXES OR (3) IN ANY COMBINATION OF SIZE NOS. 1, 1-A, & 2 MAILBOXES.
8. NOT TO SCALE.

ORIGINAL STORED AT: ITD, Headquarters 3311 West State Boise, Idaho

ORIGINAL SIGNED BY: RYAN SCOT CARNIE
DATE ORIGINAL SIGNED: AUGUST 26, 2011

REVISIONS								
NO.	DATE	BY	NO.	DATE	BY	NO.	DATE	BY
1	7-10	MGL						
2	8-11	RSC						

SCALES SHOWN ARE FOR 11" X 17" PRINTS ONLY

CADD FILE NAME: h5b_1105.std

DRAWING DATE: NOVEMBER, 2005

IDAHO TRANSPORTATION DEPARTMENT

BOISE IDAHO

ORIGINAL SIGN BY: LOREN THOMAS
HIGHWAYS PROGRAM OVERSIGHT ENGINEER
ORIGINAL SIGN BY: TOM COLE
CHIEF ENGINEER

STANDARD DRAWING

MAILBOX SNOW SHIELD

English

STANDARD DRAWING NO.

H-5-B

SHEET 1 OF 1

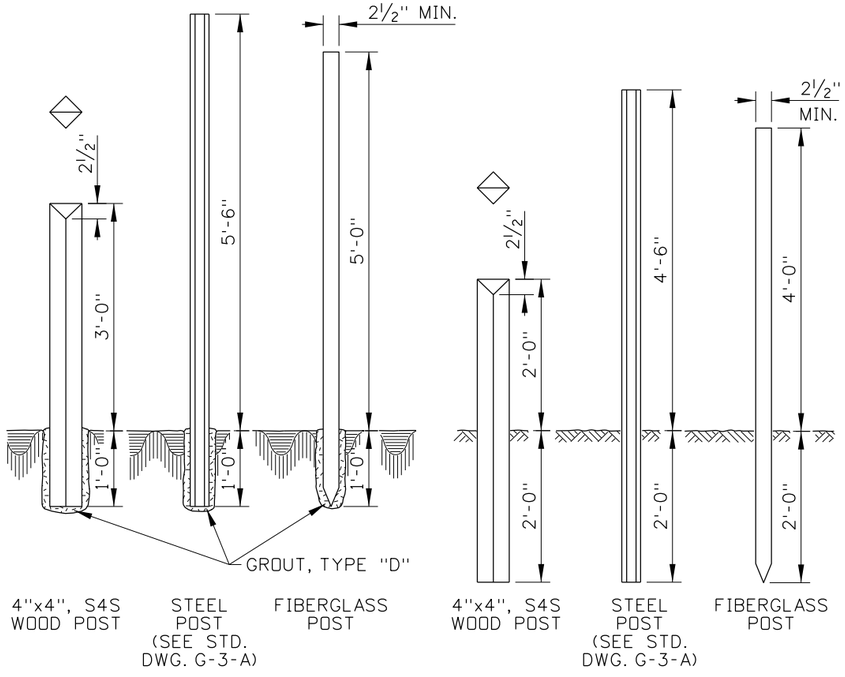

WITNESS POSTS

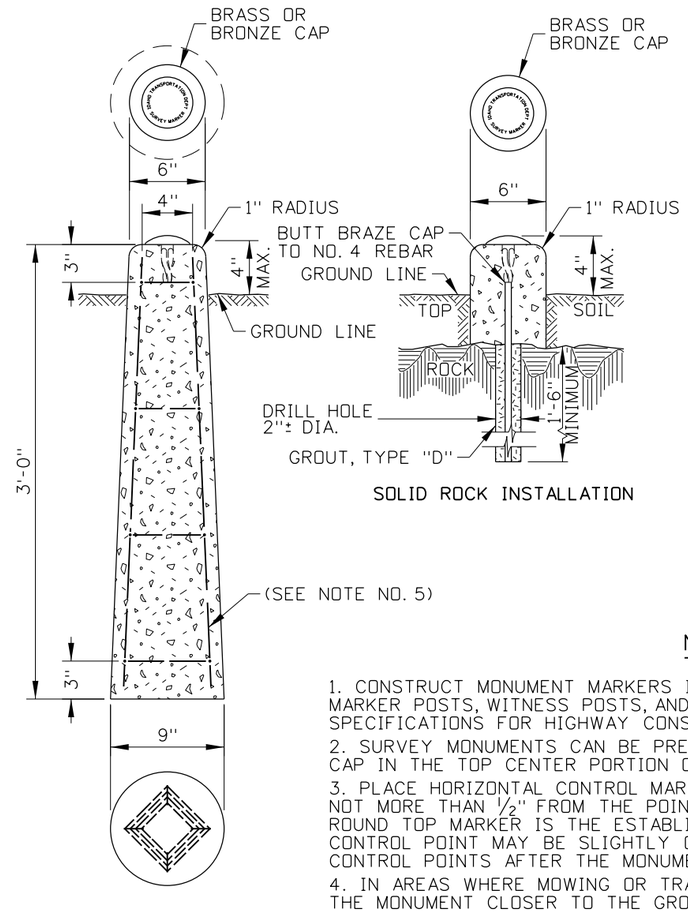

MONUMENT MARKER

(ROUND TOP CAP SHOWN)

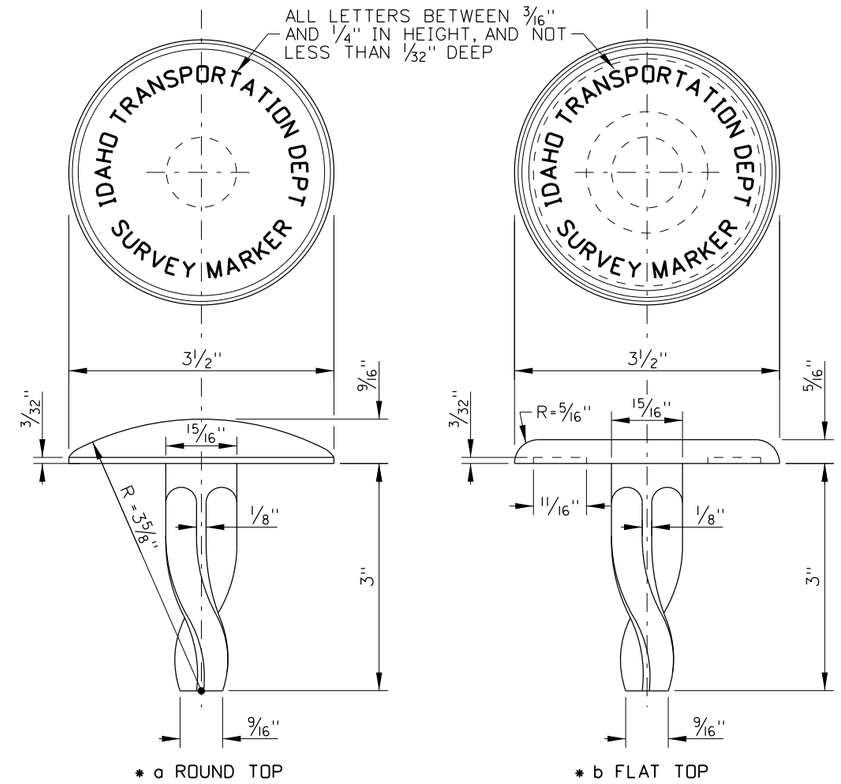

BRASS OR BRONZE CAP DETAILS

NOTES

1. CONSTRUCT MONUMENT MARKERS IN ACCORDANCE WITH SECTION 618 - MARKER POSTS, WITNESS POSTS, AND STREET MONUMENTS OF THE STANDARD SPECIFICATIONS FOR HIGHWAY CONSTRUCTION.
2. SURVEY MONUMENTS CAN BE PRECAST OR CAST-IN-PLACE. SET THE BRASS CAP IN THE TOP CENTER PORTION OF THE MONUMENT'S CONCRETE.
3. PLACE HORIZONTAL CONTROL MARKERS SO THE CENTER OF THE CAP IS NOT MORE THAN ½" FROM THE POINT ESTABLISHED. THE HIGH POINT OF ROUND TOP MARKER IS THE ESTABLISHED ELEVATION. A HORIZONTAL CONTROL POINT MAY BE SLIGHTLY OFFSET FROM THE CAP CENTER. PUNCH CONTROL POINTS AFTER THE MONUMENT IS PLACED.
4. IN AREAS WHERE MOWING OR TRAFFIC IS ENCOUNTERED, PLACEMENT OF THE MONUMENT CLOSER TO THE GROUND OR IN PAVEMENT IS ALLOWED.
5. REINFORCE EARTH INSTALLATION MONUMENT MARKER WITH 4 NO. 2 BARS, 33½" LONG, SET 1" FROM SIDES, AND PLACED AN EQUAL DISTANCE APART. TIE WITH NO. 8 WIRE AT 10" INTERVALS.
6. IN SOLID ROCK, GROUT DRILLED HOLES USING GROUT, TYPE "D" IN ACCORDANCE WITH SECTION 705 - GROUT AND MORTAR OF THE STANDARD SPECIFICATIONS FOR HIGHWAY CONSTRUCTION.
7. THE MONUMENT MARKER MAY BE USED AS A RIGHT-OF-WAY MARKER, PROJECT MARKER, REFERENCE MARKER, CONTROL POINT, OR PROPERTY CORNER. THE USE OF A SPECIFIC TYPE OF MONUMENT WILL BE DECIDED BY THE ENGINEER OR LAND SURVEYOR.
8. STAMP THE MONUMENT CAP ACCORDING TO ITS PURPOSE. "ROW" FOR RIGHT-OF-WAY MARKER, "PRJ" FOR PROJECT MARKER, "REF" FOR REFERENCE MARKER, "CTL" FOR CONTROL POINT, OR "COR" FOR PROPERTY CORNER.
9. PLACE THE WITNESS POSTS AS CLOSE TO THE MARKERS AS PRACTICABLE.
10. S4S: SURFACE FOUR SIDES
11. NOT TO SCALE.

* a USE ROUND TOP MARKERS FOR VERTICAL CONTROL OR HORIZONTAL AND VERTICAL CONTROL.
* b FLAT TOP MARKERS ARE TO BE USED FOR HORIZONTAL CONTROL ONLY.

ORIGINAL STORED AT: ITD, Headquarters 3311 West State Boise, Idaho

ORIGINAL SIGNED BY: RYAN D. LANCASTER DATE ORIGINAL SIGNED: DECEMBER 17, 2012

REVISIONS

NO.	DATE	BY	NO.	DATE	BY	NO.	DATE	BY
1	5-62		6	1-68		11	6-02	MSM
2	6-62		7	9-72		12	12-04	MSM
3	5-65		8	7-90	GB	13	11-06	MSM
4	9-66		9	9-93	MSM	14	12-12	RDL
5	4-67		10	5-95	MSM			

SCALES SHOWN ARE FOR 11" X 17" PRINTS ONLY

CADD FILE NAME: i2a_1212.std

DRAWING DATE: APRIL, 1961

IDAHO TRANSPORTATION DEPARTMENT

BOISE IDAHO

ORIGINAL SIGNED BY: LOREN THOMAS
HIGHWAYS PROGRAM OVERSIGHT ENGINEER
ORIGINAL SIGNED BY: TOM COLE
CHIEF ENGINEER

STANDARD DRAWING

MONUMENT MARKERS & WITNESS POSTS

REQUIRES STD. DWG. G-3-A

English

STANDARD DRAWING NO.

I-2-A

SHEET 1 OF 1

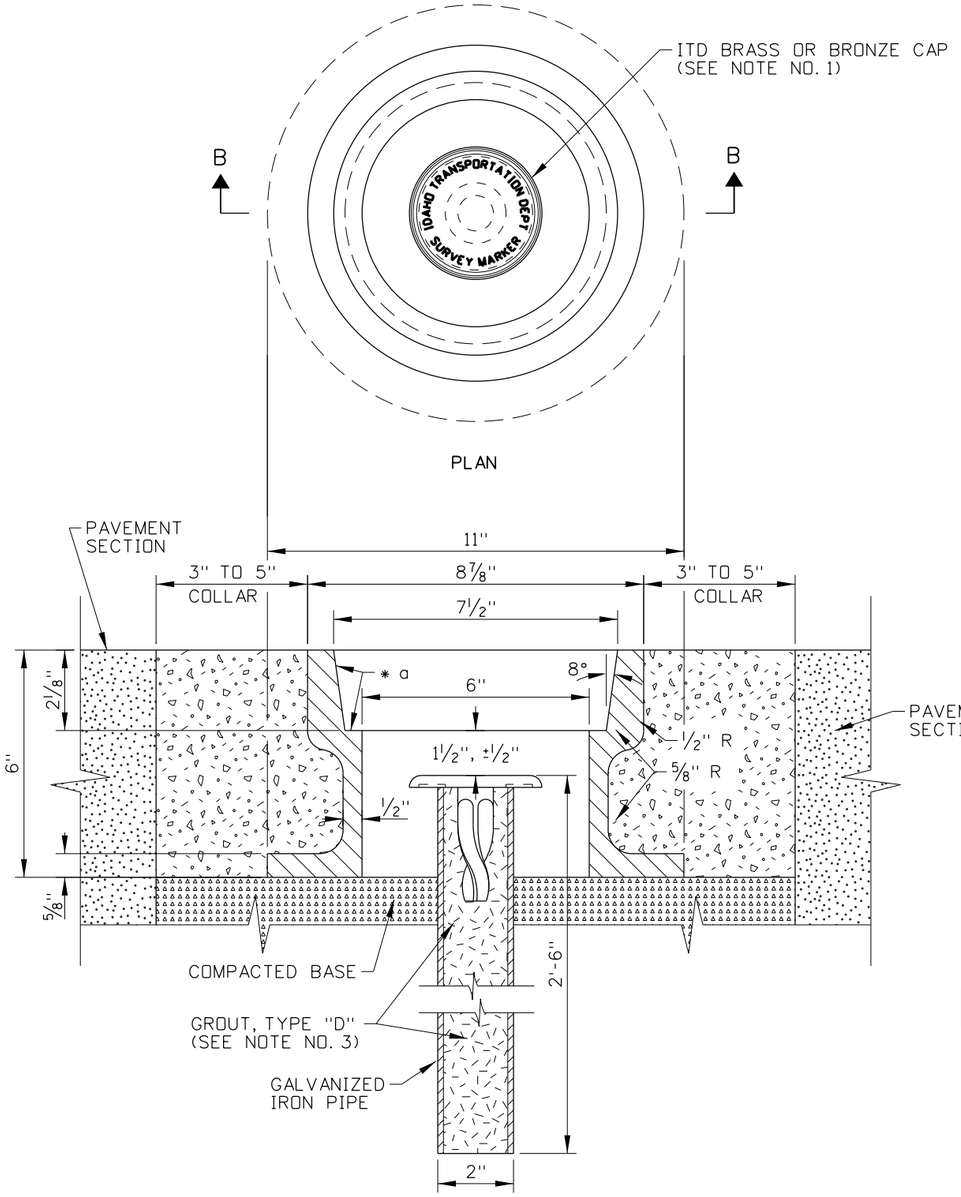

SECTION B-B

MONUMENT & CASING

(SCALE 1" = 4")

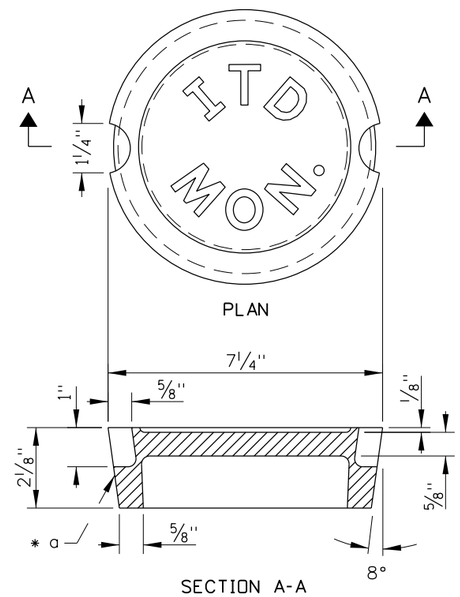

SECTION A-A

COVER

(SCALE 1" = 4")

* a MACHINED SURFACE (SEE NOTE NO. 4)

NOTES

1. PROVIDE BRASS OR BRONZE CAP AS SHOWN ON STD. DWG. I-2-A MONUMENT MARKERS & WITNESS POSTS.
2. CONSTRUCT CONCRETE COLLAR AROUND CASING AS SHOWN. USE NON-STRUCTURAL CONCRETE IN ACCORDANCE WITH SECTION 509 - NON-STRUCTURAL CONCRETE OF THE STANDARD SPECIFICATIONS FOR HIGHWAY CONSTRUCTION.
3. ANCHOR BRASS OR BRONZE CAP WITH GROUT, TYPE "D" IN ACCORDANCE WITH SECTION 705 - GROUT AND MORTAR OF THE STANDARD SPECIFICATIONS FOR HIGHWAY CONSTRUCTION.
4. MACHINE COVER AND CASING CONTACT SURFACES TO A TRUE BEARING ALL AROUND.
5. EQUIVALENT OR HEAVIER CASING DESIGNS MAY BE USED WITH PRIOR APPROVAL FROM THE ENGINEER.

ORIGINAL STORED AT: ITD, Headquarters 3311 West State Boise, Idaho

ORIGINAL SIGNED BY: RYAN D. LANCASTER
DATE ORIGINAL SIGNED: DECEMBER 17, 2012

REVISIONS

NO.	DATE	BY	NO.	DATE	BY	NO.	DATE	BY
1	9-93	MSM	6	6-05	MSM			
2	5-95	MSM	7	11-06	MSM			
3	1-97	MSM	8	6-07	MSM			
4	10-02	MSM	9	12-12	RDL			
5	12-04	MSM						

SCALES SHOWN ARE FOR 11" X 17" PRINTS ONLY

CADD FILE NAME: i2b_1212.std

DRAWING DATE: MARCH, 1974

IDAHO TRANSPORTATION DEPARTMENT

BOISE IDAHO

ORIGINAL SIGNED BY: LOREN THOMAS
HIGHWAYS PROGRAM OVERSIGHT ENGINEER
ORIGINAL SIGNED BY: TOM COLE
CHIEF ENGINEER

STANDARD DRAWING

STREET MONUMENT MARKER & INSTALLATION

REQUIRES STD. DWG. I-2-A

English

STANDARD DRAWING NO.

I-2-B

SHEET 1 OF 1

POSITION

1. MAGNETIC ORIENTATION OF APPROACHING TRAVEL LANE. N = NORTH, S = SOUTH, ETC.
2. VEHICULAR MOVEMENT IN TRAVEL LANE: L = LEFT TURN; R = RIGHT TURN; NO ENTRY = THROUGH
3. LANE DESIGNATION FOR EACH MOVEMENT: a-z IN ASCENDING ORDER, a BEING NEAREST THE CURB OR EDGE OF PAVEMENT.
4. LOOP NUMBER IN EACH TRAVEL LANE: 1 - 4 IN ASCENDING ORDER, 1 BEING THE LOOP NEAREST THE STOP BAR.

LOOP NUMBERING PROCEDURE EXAMPLE

(W/1 L/2 a/3 3/4)

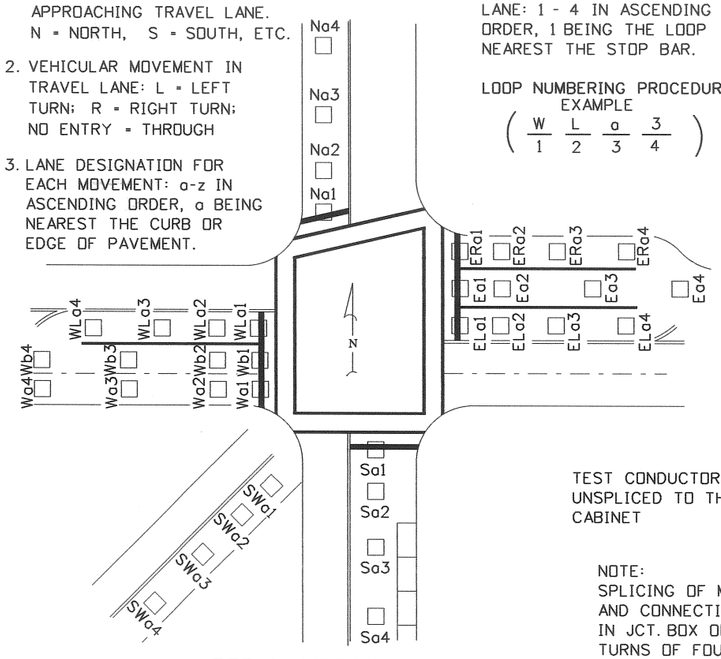

LOOP NUMBERING SYSTEM

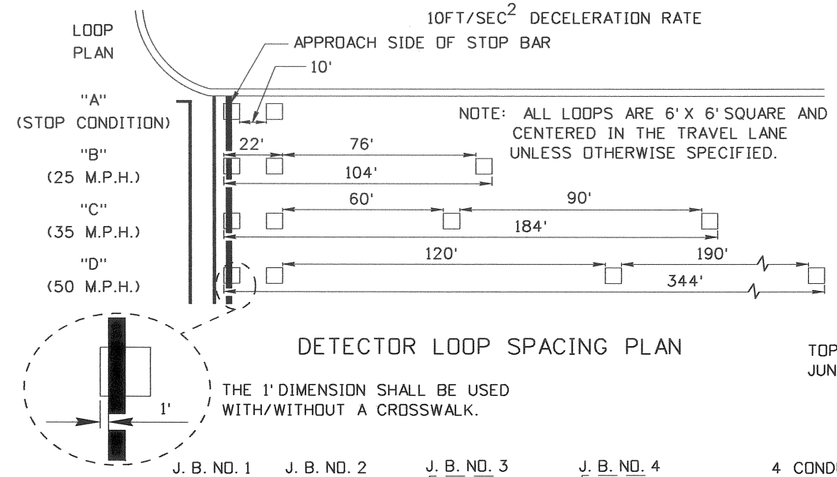

NOTE: ALL LOOPS ARE 6' X 6' SQUARE AND CENTERED IN THE TRAVEL LANE UNLESS OTHERWISE SPECIFIED.

DETECTOR LOOP SPACING PLAN

THE 1' DIMENSION SHALL BE USED WITH/WITHOUT A CROSSWALK.

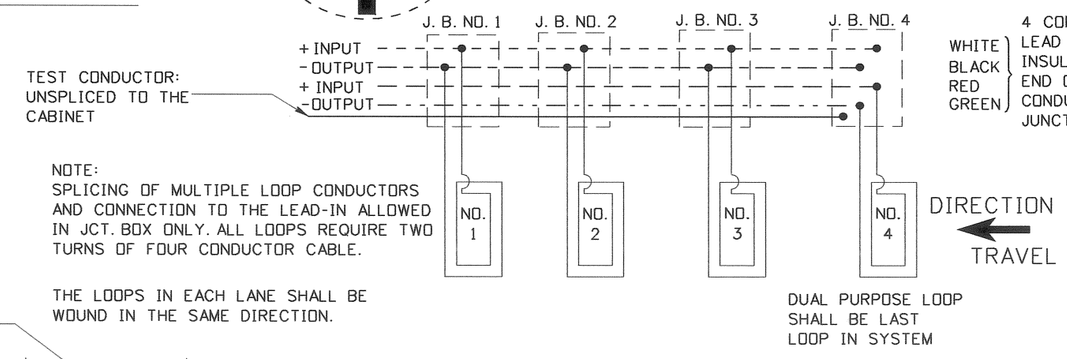

NOTE:
SPLICING OF MULTIPLE LOOP CONDUCTORS AND CONNECTION TO THE LEAD-IN ALLOWED IN JCT. BOX ONLY. ALL LOOPS REQUIRE TWO TURNS OF FOUR CONDUCTOR CABLE.

THE LOOPS IN EACH LANE SHALL BE WOUND IN THE SAME DIRECTION.

LOOP SYSTEM AND JUNCTION BOX WIRING DIAGRAM

NOTES:
1. ALL CONDUCTOR SPLICES SHALL BE SOLDERED AND WATERPROOFED WITH AN APPROVED SPLICE KIT.
2. THE FOIL SHIELD SHALL BE INSULATED TO PREVENT GROUNDING AT THE JUNCTION BOX.
3. ✳ SPLICE DUAL PURPOSE LOOPS TO THE RED AND GREEN CONDUCTORS.

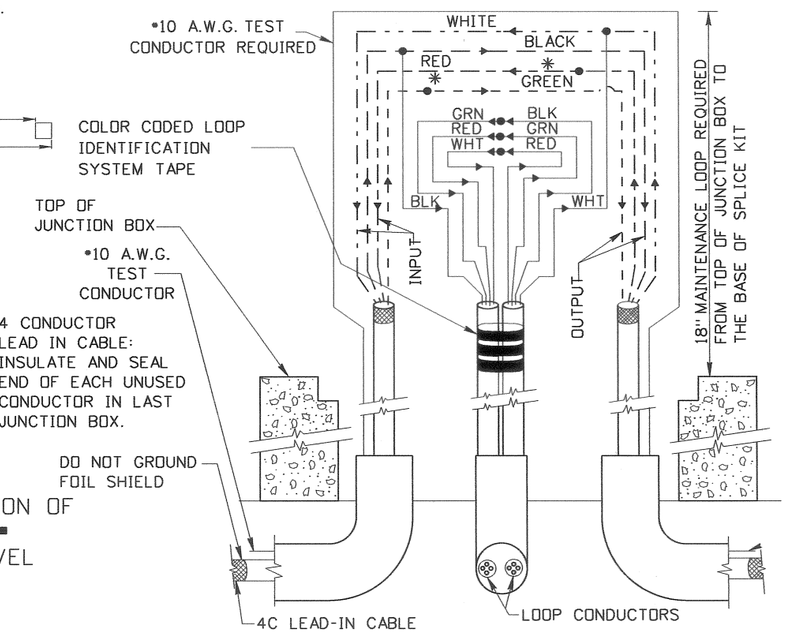

LOOP SPLICE DETAIL AT JUNCTION BOX

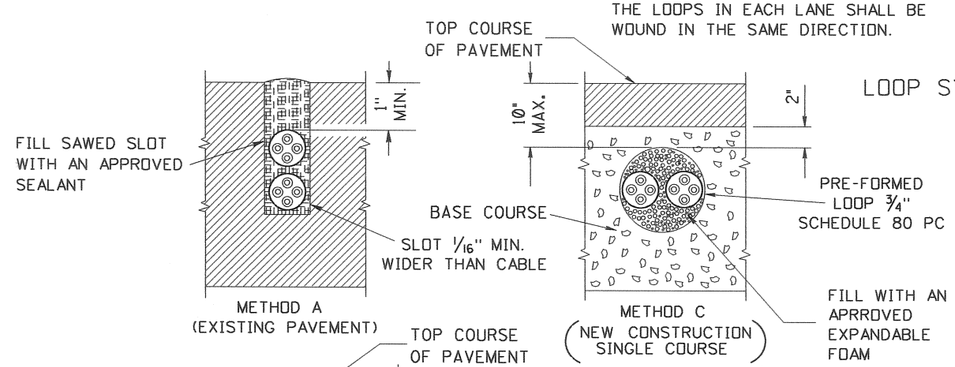

LOOP CONDUCTOR INSTALLATION

NOTES:
1. METHOD "C" MAY BE USED ONLY WITH PRE-FORMED LOOPS.
2. HYDRO CLEAN AND AIR DRY SLOTS AFTER CUTTING AND PRIOR TO CABLE INSTALLATION.
3. BED LOOP CONDUCTORS IN SEALANT FOR TOTAL ENCAPSULATION.
4. SEAT LOOP CONDUCTORS IN SLOT WITH A BLUNT INSTRUMENT.

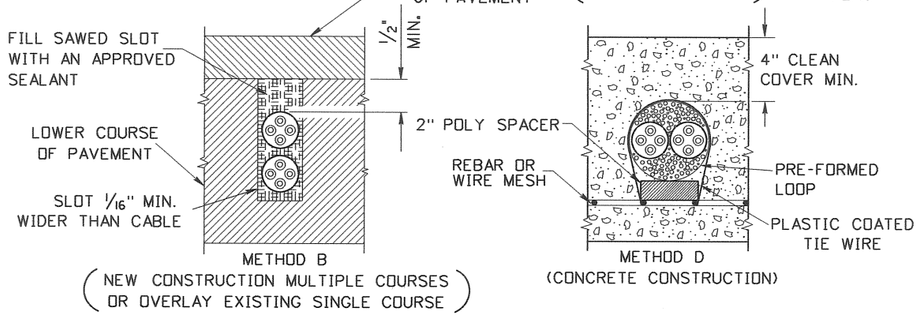

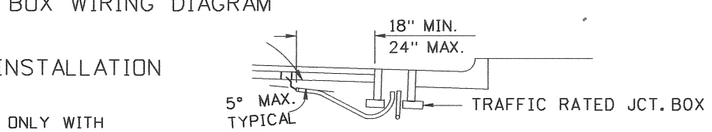

USE ONLY WHEN PLACEMENT BEHIND THE CURB IS NOT POSSIBLE

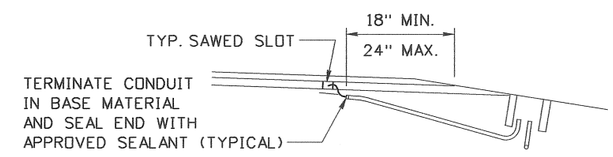

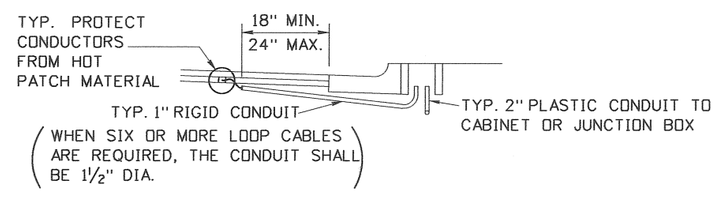

JUNCTION BOX AND CONDUIT LOCATION

LANE NO.	TAPE COLOR
1	BLACK
2	WHITE
3	RED
4	GREEN
5	ORANGE
6	BLUE

IN ASCENDING ORDER - BLACK SHALL BE USED FOR THE LANE NEAREST THE CURB OR EDGE OF PAVEMENT.

EXAMPLE:
CONDUCTORS FOR LOOP 1 LANE 1 REQUIRE 1 BAND OF BLACK TAPE.

CONDUCTORS FOR LOOP 3 LANE 4 REQUIRE 3 BANDS OF GREEN TAPE.

COLOR CODED LOOP IDENTIFICATION SYSTEM

REVISIONS

NO.	DATE	BY	NO.	DATE	BY	NO.	DATE	BY
1	12-93	HEB	6	08-08	NQB			
2	12-94	HEB	7	07-10	HEB			
3	03-96	HEB						
4	07-03	HEB						
5	08-06	HEB						

SCALES SHOWN ARE FOR 11" X 17" PRINTS ONLY

CADD FILE NAME: i5__0710.std

DRAWING DATE: DECEMBER, 1994

IDAHO TRANSPORTATION DEPARTMENT

BOISE IDAHO

ASSISTANT CHIEF ENGINEER (DEVELOPMENT)

CHIEF ENGINEER

STANDARD DRAWING

LOOP DETECTORS

10FT/SEC2 DECELERATION RATE

English

STANDARD DRAWING NO.

I-5

SHEET 1 OF 1

PROFESSIONAL ENGINEER REGISTERED 6260 7/12/10 STATE OF IDAHO CARL D. MAIN

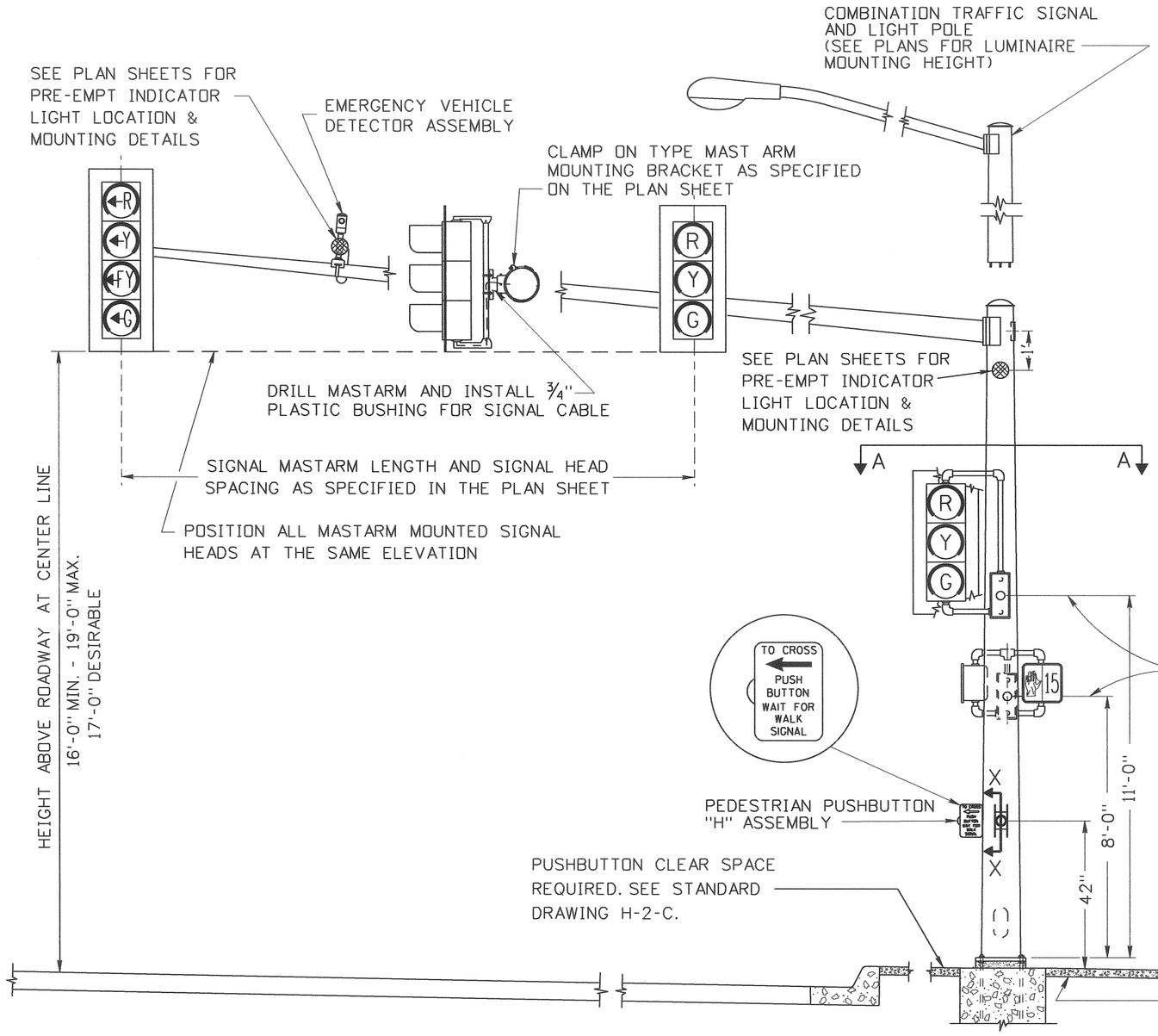

MAST ARM POLE

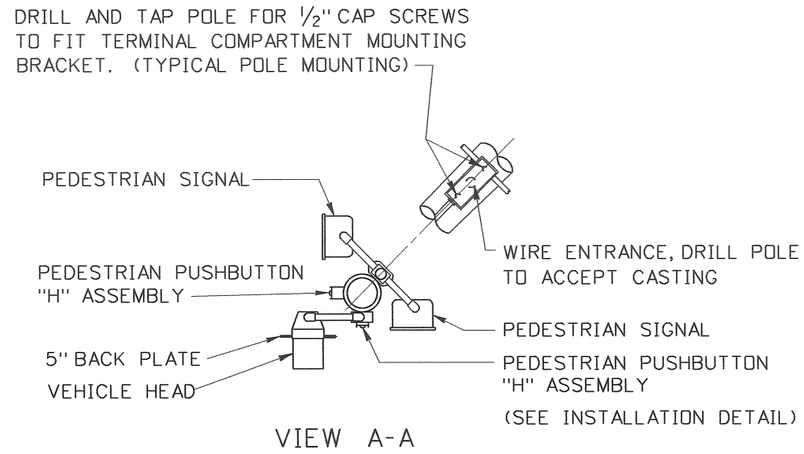

VIEW A-A

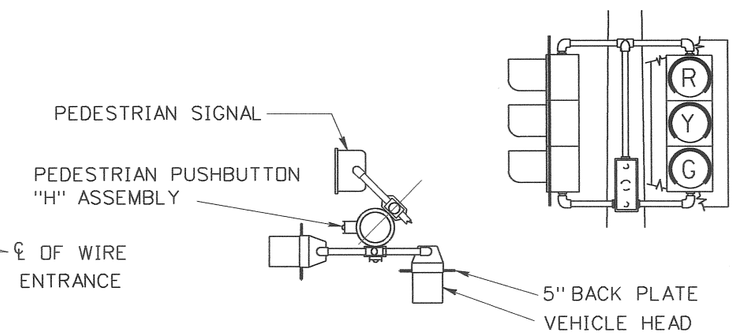

POLE MOUNTED HEADS FOR DUAL MASTARM INSTALLATION

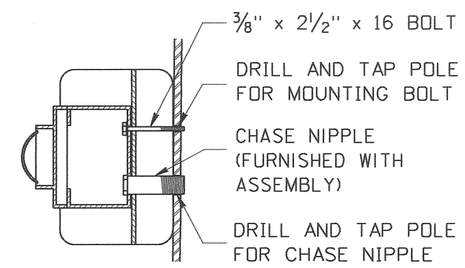

PEDESTRIAN PUSHBUTTON "H" ASSEMBLY MOUNTING DETAIL SECTION X-X

NOTES:

1. THIS DRAWING SHOWS TYPICAL INSTALLATION DETAILS ONLY. SEE PLAN SHEETS FOR QUANTITY OF SIGNAL AND LIGHTING COMPONENTS TO BE INSTALLED.
2. ORIENTATION OF SIGNAL COMPONENTS SHALL BE AS SHOWN UNLESS OTHERWISE SPECIFIED ON THE PLAN SHEETS.
3. SEE STANDARD DRAWING "I-7-C" FOR FOUNDATION DETAILS.
4. ALL SIGNAL COMPONENTS SHALL BE LEVELED AFTER THE POLE HAS BEEN PLUMBED.
5. SPECIFIC LOCATION OF EACH POLE INSTALLATION SHALL BE AS INDICATED ON THE PROJECT PLAN SHEETS.

REVISIONS

NO.	DATE	BY	NO.	DATE	BY	NO.	DATE	BY
1	12-94	HEB						
2	12-01	NOB						
3	07-05	HEB						
4	08-06	HEB						
5	07-10	HEB						

SCALES SHOWN ARE FOR 11" X 17" PRINTS ONLY

CADD FILE NAME: i6o_0710.std

DRAWING DATE: AUGUST, 1994

IDAHO TRANSPORTATION DEPARTMENT

BOISE IDAHO

ASSISTANT CHIEF ENGINEER (DEVELOPMENT)

CHIEF ENGINEER

STANDARD DRAWING

MAST ARM TRAFFIC SIGNAL POLES

REQUIRES STD. DWG. H-2-C

English

STANDARD DRAWING NO.

I-6-A

SHEET OF

PROFESSIONAL ENGINEER REGISTERED 6260 7/12/10 STATE OF IDAHO CARL D. MAIN

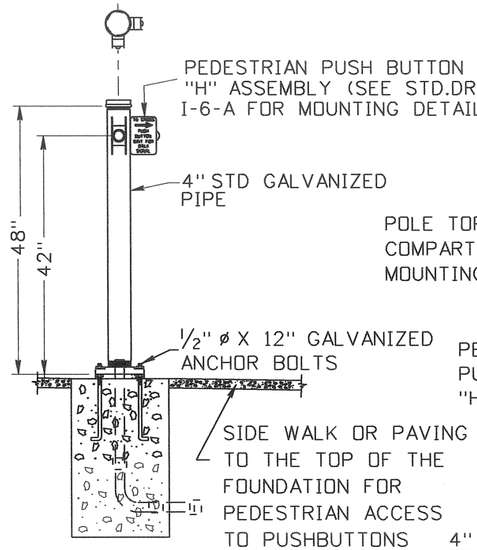

PEDESTRIAN PUSHBUTTON POLE

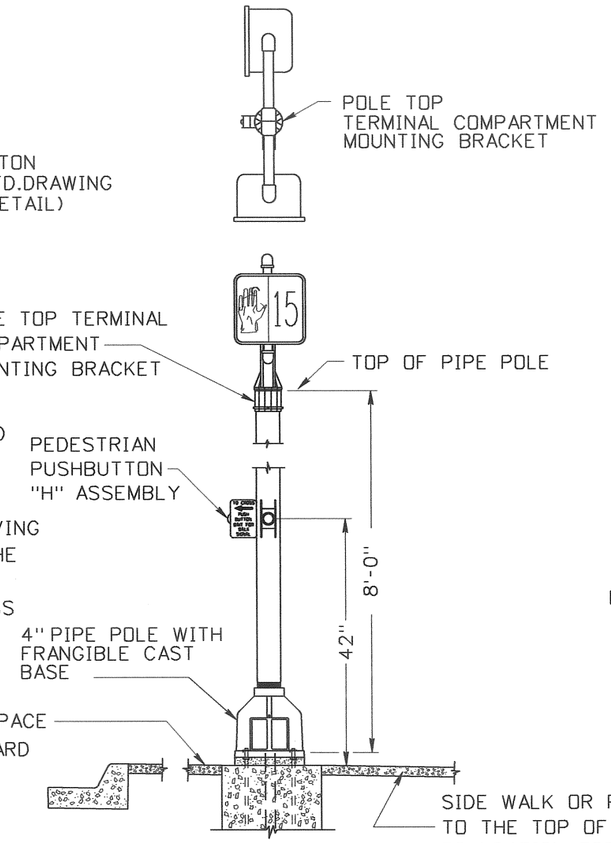

PEDESTRIAN SIGNAL

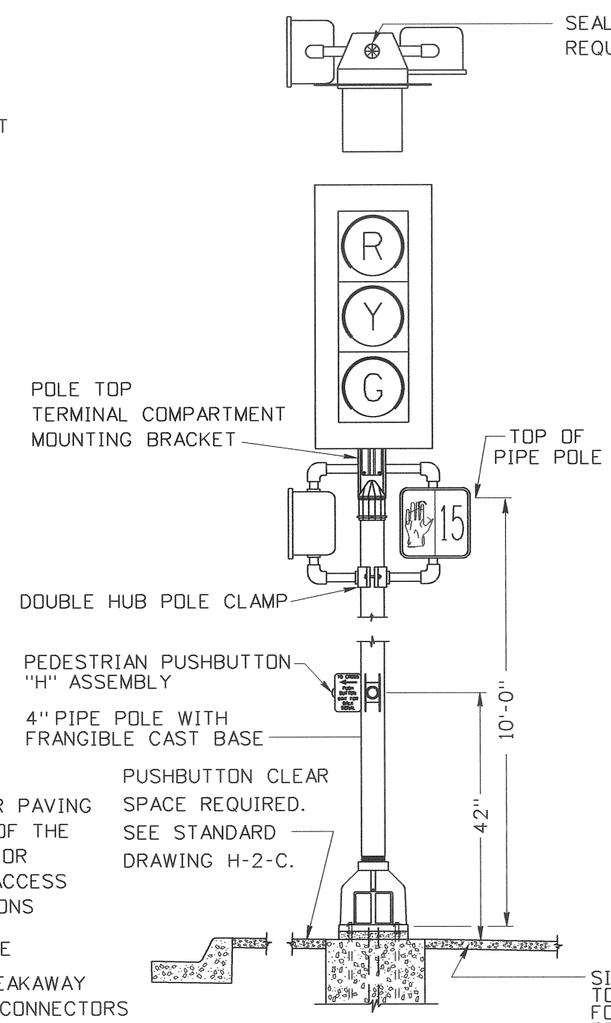

VEHICLE AND PEDESTRIAN SIGNAL

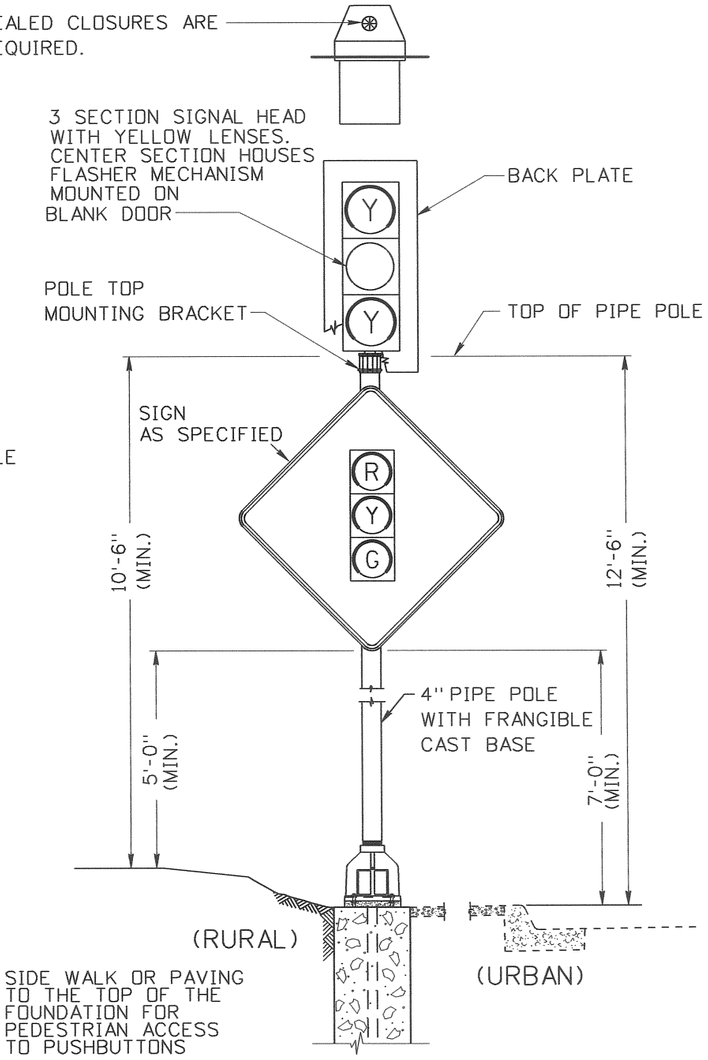

HAZARD IDENTIFICATION BEACON

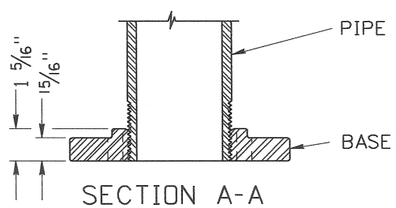

SECTION A-A

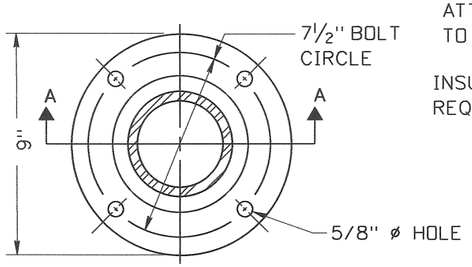

FRANGIBLE CAST IRON PIPE FLANGE

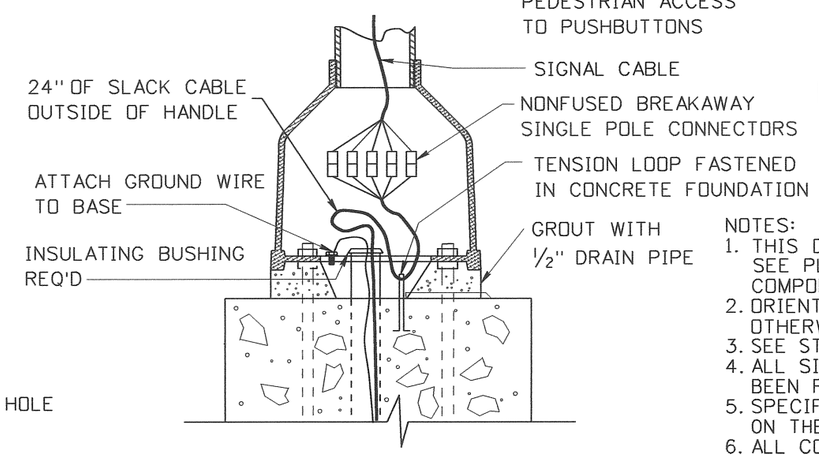

TYPICAL SIGNAL PEDESTAL CONNECTOR INSTALLATION

NOTES:
1. THIS DRAWING SHOWS TYPICAL INSTALLATION DETAILS ONLY. SEE PLAN SHEETS FOR QUANTITY AND LOCATION OF SIGNAL AND LIGHTING COMPONENTS TO BE INSTALLED.
2. ORIENTATION OF SIGNAL COMPONENTS SHALL BE AS SHOWN UNLESS OTHERWISE SPECIFIED ON THE PLAN SHEETS.
3. SEE STANDARD DRAWING "I-7-C" FOR FOUNDATION DETAILS.
4. ALL SIGNAL COMPONENTS SHALL BE LEVELED AFTER THE POLE HAS BEEN PLUMBED.
5. SPECIFIC LOCATION OF EACH POLE INSTALLATION SHALL BE AS INDICATED ON THE PROJECT PLAN SHEETS.
6. ALL CONDUIT ELBOWS USED IN CONCRETE BASES SHALL BE STEEL.
7. STEEL CONDUIT SHALL BE USED TO EXTEND ELBOWS BEYOND CONCRETE FOUNDATION.
8. SPARE STUB OUTS SHALL BE TERMINATED WITH A STEEL COUPLING AND PLASTIC PUSH PLUG AT BOTH ENDS.

REVISIONS

NO.	DATE	BY	NO.	DATE	BY	NO.	DATE	BY
1	12-94	HEB						
2	08-06	NQB						
3	12-07	HEB						
4	07-09	HEB						
5	05-10	HEB						

SCALES SHOWN ARE FOR 11" X 17" PRINTS ONLY

CADD FILE NAME: i6b_0510.std

DRAWING DATE: AUGUST, 1994

IDAHO TRANSPORTATION DEPARTMENT

BOISE IDAHO

ASSISTANT CHIEF ENGINEER (DEVELOPMENT)

CHIEF ENGINEER

STANDARD DRAWING

FRANGIBLE CAST BASE TRAFFIC SIGNAL POLES

REQUIRES STD. DWG. H-2-C

English

STANDARD DRAWING NO. I-6-B

SHEET 1 OF 1

PROFESSIONAL ENGINEER REGISTERED 6260 7/12/10 STATE OF IDAHO CARL D. MAIN

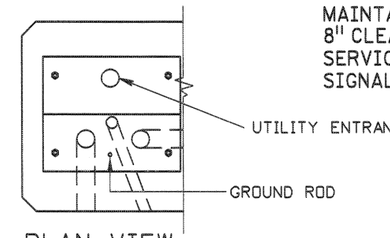

PLAN VIEW

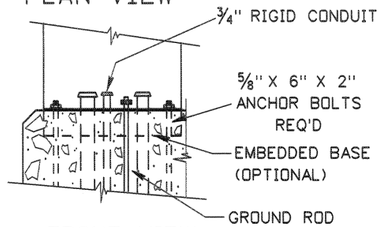

FRONT VIEW PEDESTAL INSTALLATION DETAIL

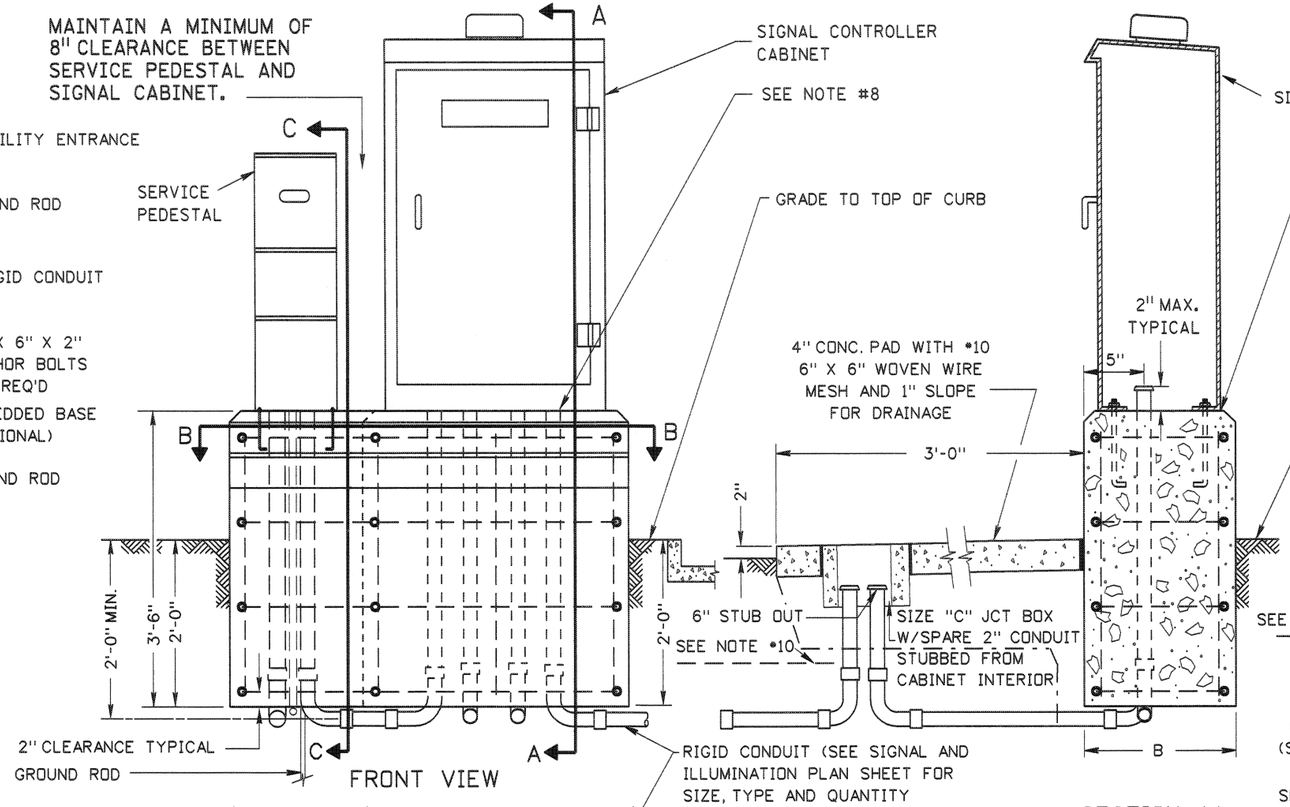

FRONT VIEW

SECTION AA

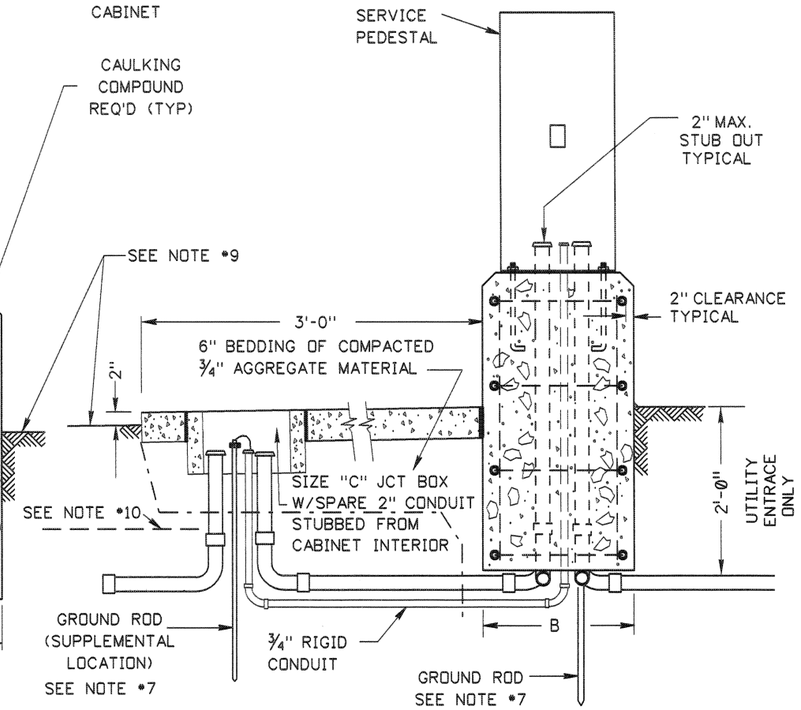

SECTION CC

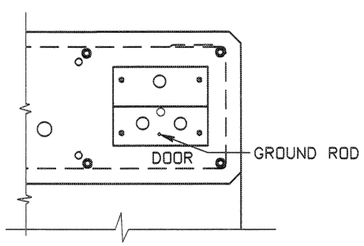

VERIFY PLACEMENT OF 5/8" X 6" X 2" ANCHOR BOLTS

ALTERNATE SERVICE PEDESTAL LOCATION
(TO BE APPROVED BY ENGINEER)

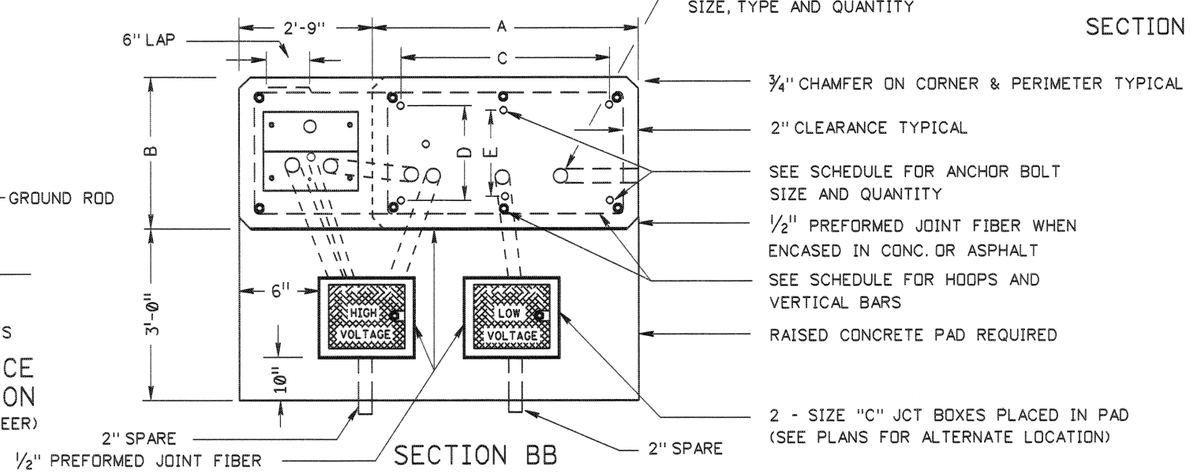

SECTION BB

NOTES:

1. THE FOUNDATION SHALL BE LOCATED AS INDICATED ON THE PROJECT PLAN SHEETS.
2. FOUNDATION REBAR CAGES MAY BE WELDED IF THE REBAR CONFORMS TO ASTM A706/A706M AND ALL WELDING CONFORMS TO ANSI/AWS D1.4 (STRUCTURAL WELDING CODE - REINFORCING STEEL).
3. ALL CONDUITS, ELBOWS, AND COUPLINGS WITHIN AND PROTRUDING FROM THE FOUNDATION SHALL BE RIGID STEEL. THE REMAINING CONDUITS SHALL BE AS SHOWN ON THE PLANS.
4. STUBOUTS SHALL BE TERMINATED WITH A STEEL BONDING BUSHING.
5. FOAM PLUG REQUIRED AT BOTH ENDS OF SPARE CONDUITS.
6. USE DIMENSION "A" FOR CABINET FOUNDATION AND PAD WHEN THE SERVICE PEDESTAL IS NOT REQUIRED.
7. GROUND IN ACCORDANCE WITH N.E.C.
8. CONDUIT SHALL BE INSTALLED IN SUCH A MANNER AS TO NOT CAUSE MODIFICATION OF THE CABINETS.
9. GRADE AREA TO PROVIDE DRAINAGE AWAY FROM CABINET FOUNDATION.
10. 6" WIDE ELECTRICAL HAZARD TAPE INSTALLED 1'-0" ABOVE CONDUIT (TYPICAL OF ALL CONDUIT PLACED IN GROUND).
11. IF SUPPLIED, USE SERVICE PEDESTAL BASE FOR ANCHOR BASE TEMPLATE.

FOUNDATION SCHEDULE

CABINET TYPE	FOUNDATION TYPE	A	B	C	D	E	CABINET ONLY: HOOPS NO.	HOOPS SIZE	HOOPS LIN. FT.	VERTICAL RODS NO.	VERTICAL RODS SIZE	VERTICAL RODS LIN. FT.	CU. YDS. CONC. FOUNDATION	CU. YDS. CONC. PAD	CABINET AND SERVICE PEDESTAL: HOOPS NO.	HOOPS SIZE	HOOPS LIN. FT.	VERTICAL RODS NO.	VERTICAL RODS SIZE	VERTICAL RODS LIN. FT.	CU. YDS. CONC. FOUNDATION	CU. YDS. CONC. PAD	CABINET ANCHOR BOLT QNTY.	CABINET ANCHOR BOLT SIZE
SIGNAL	M	2'-9"	1'-8"	—	—	1'-0"	4	#4	32'-0"	6	#4	19'-0"	.6	.1	4	#4	54'-0"	8	#4	25'-4"	1.2	.2	2	3/4" X 18" X 2 1/4"
	P & R	3'-11"	2'-5"	3'-4 3/4"	1'-6 1/2"	—	4	#4	47'-4"	6	#4	19'-0"	1.2	.1	4	#4	69'-4"	8	#4	25'-4"	2.1	.2	4	3/4" X 18" X 2 1/4"

REVISIONS

NO.	DATE	BY	NO.	DATE	BY	NO.	DATE	BY
1	08-96	NQB						
2	12-04	HEB						
2	05-05	HEB						

SCALES SHOWN ARE FOR 11" X 17" PRINTS ONLY

CADD FILE NAME f7a_0505.std

DRWG. ORIG. DATE: DECEMBER, 1994

IDAHO TRANSPORTATION DEPARTMENT

BOISE IDAHO

P C Thomas
ASSISTANT CHIEF ENGINEER (DEVELOPMENT)
Steven C. Hutchison
CHIEF ENGINEER

STANDARD DRAWING

FOUNDATION DETAILS FOR SIGNAL CABINETS

English

STANDARD DRWG. NO.

I-7-A

SHEET 1 OF 1

PROFESSIONAL ENGINEER REGISTERED 7910 5-11-05 STATE OF IDAHO LANCE Z. JOHNSON

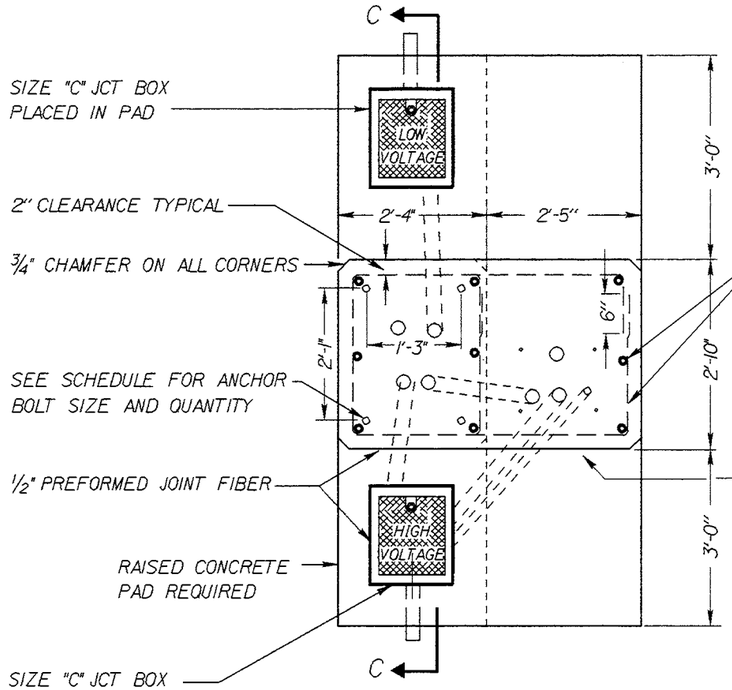

TOP VIEW

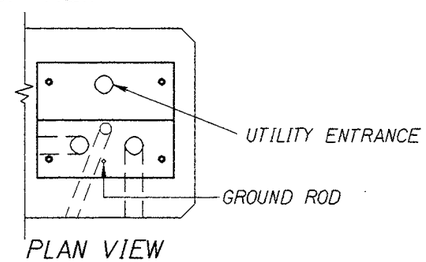

PLAN VIEW

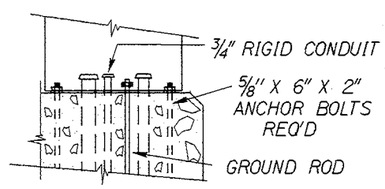

FRONT VIEW
PEDESTAL INSTALLATION DETAIL

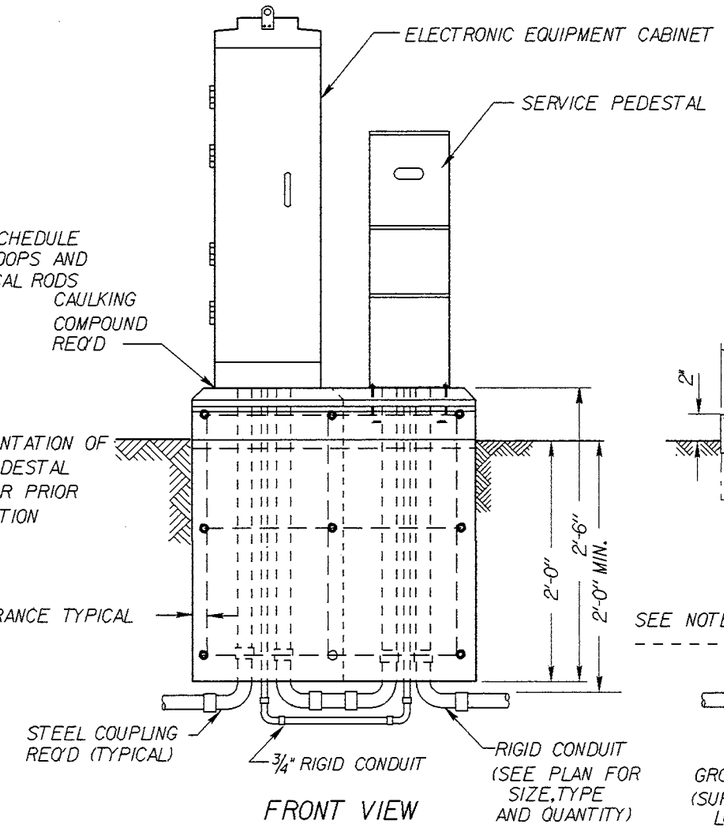

FRONT VIEW

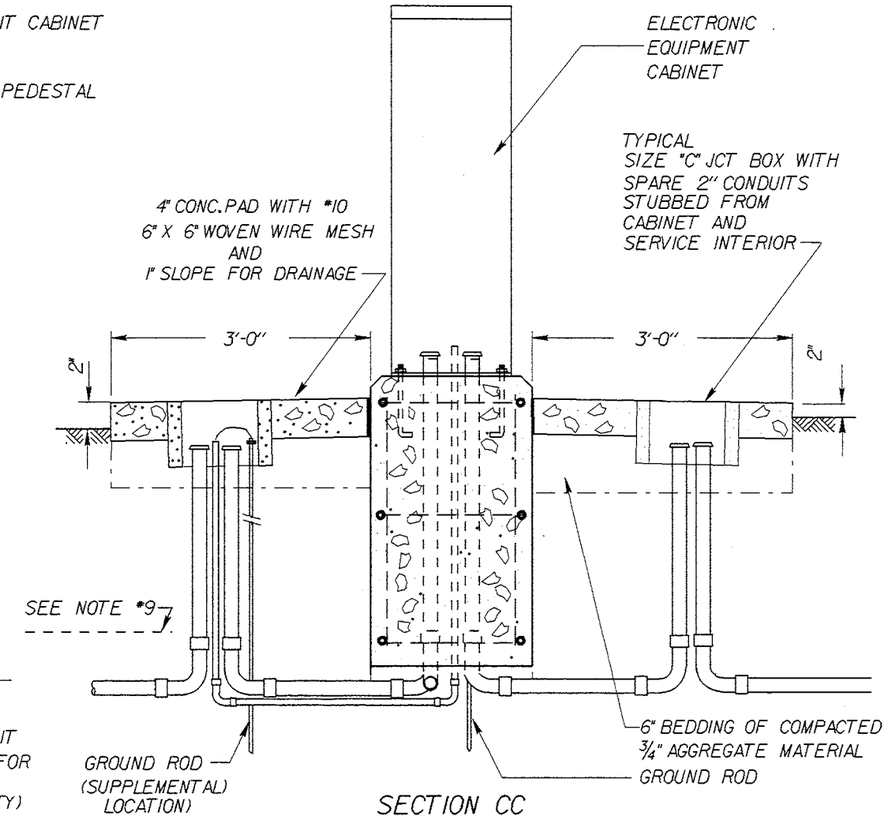

SECTION CC

NOTES:
1. THE FOUNDATION SHALL BE LOCATED AS INDICATED ON THE PROJECT PLAN SHEETS.
2. ALL CONDUITS, ELBOWS AND COUPLINGS WITHIN AND PROTRUDING FROM THE FOUNDATION SHALL BE RIGID STEEL. THE REMAINING CONDUITS SHALL BE AS SHOWN ON THE PLANS.
3. STUBOUTS SHALL BE TERMINATED WITH A STEEL BONDING BUSHING.
4. PLASTIC PUSH PLUG REQ'D AT BOTH ENDS OF SPARE CONDUITS.
5. USE DIMENSION "A" FOR THE CABINET FOUNDATION AND PAD WHEN THE SERVICE PEDESTAL IS NOT REQUIRED.
6. GROUND IN ACCORDANCE WITH N.E.C.
7. CONDUIT SHALL BE INSTALLED IN SUCH A MANNER AS TO NOT CAUSE MODIFICATION OF THE CABINET.
8. GRADE TO PROVIDE DRAINAGE AWAY FROM CABINET FOUNDATION.
9. 6" WIDE ELECTRICAL HAZARD TAPE SHALL BE INSTALLED 1'-0" ABOVE CONDUIT. (TYPICAL OF ALL CONDUIT PLACED IN GROUND)

FOUNDATION SCHEDULE

		CABINET ONLY								CABINET AND SERVICE PEDESTAL									
CABINET TYPE	FOUNDATION TYPE	HOOPS			VERTICAL RODS			CU.YDS.CONC.		HOOPS			VERTICAL RODS			CU.YDS.CONC.		ANCHOR BOLT	
		NO.	SIZE	LIN.FT.	NO.	SIZE	LIN.FT.	FOUNDATION	PAD	NO.	SIZE	LIN.FT.	NO.	SIZE	LIN.FT.	FOUNDATION	PAD	QNTY.	SIZE
ELECTRONIC	170	3	#4	28'6"	6	#4	13'0"	.61	.19	3	#4	43'0"	8	#4	19'6"	1.20	.35	4	1/2" X 12" X 3"

REVISIONS

NO.	DATE	BY	NO.	DATE	BY	NO.	DATE	BY	NO.	DATE	BY
1	08-96	HEB									

SCALES SHOWN ARE FOR 22" X 34" PRINTS ONLY

CADD FILE NAME 17c_0896.std

DRAWING DATE: DECEMBER, 1994

IDAHO TRANSPORTATION DEPARTMENT

BOISE, IDAHO

CHIEF OF HIGHWAY OPERATIONS

CHIEF ENGINEER

STANDARD DRAWING

ELECTRONIC CABINET FOUNDATION DETAIL

STANDARD DRAWING NO. I-7-B

SHEET 1 OF 1

PROFESSIONAL ENGINEER REGISTERED Gary C. Sanderson 6265 8-23-96 STATE OF IDAHO GARY C. SANDERSON

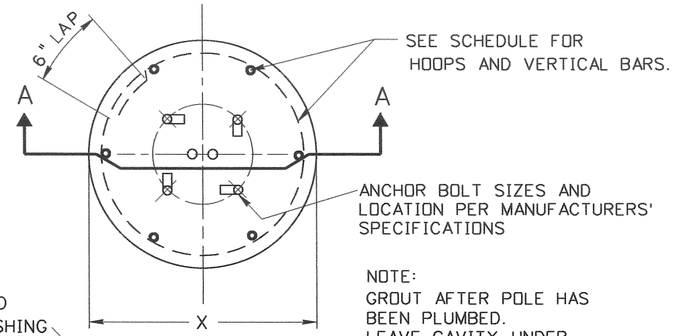

SECTION BB

✳ THE SLIP PLANE OF A BREAK AWAY POLE FOUNDATION SHALL NOT BE MORE THAN 4 INCHES FROM A 5.0 FOOT CHORD PERPENDICULAR TO THE CONTROL LINE OF THE ROADWAY.
THE CHORD SHALL INTERSECT THE SIDE SLOPE ON EACH SIDE OF THE FOUNDATION.

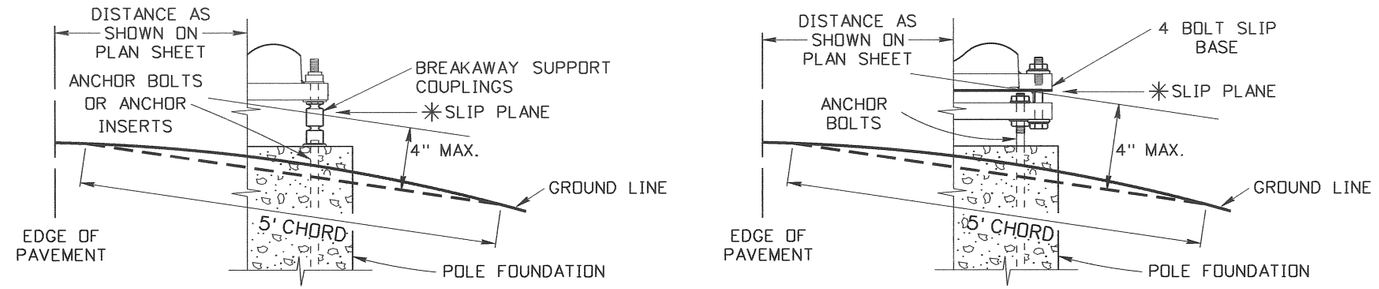

BREAKAWAY SUPPORT CLEARANCE DIAGRAMS

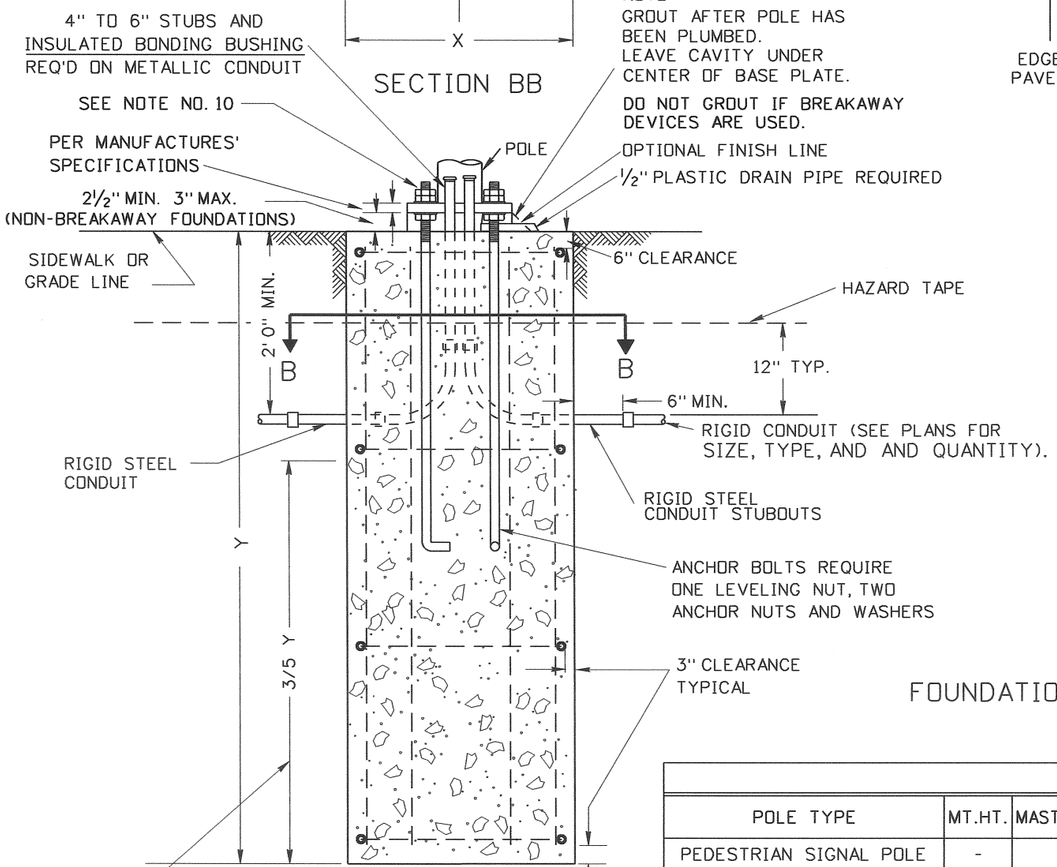

TYPICAL POLE FOUNDATION

SECTION AA

THE LOWER 3/5 OF THE FOUNDATION TO BE PLACED AGAINST UNDISTURBED SOIL UNLESS OTHERWISE APPROVED BY THE ENGINEER. THE UPPER 2/5 OF THE FOUNDATION MAY BE FORMED AS NEEDED.

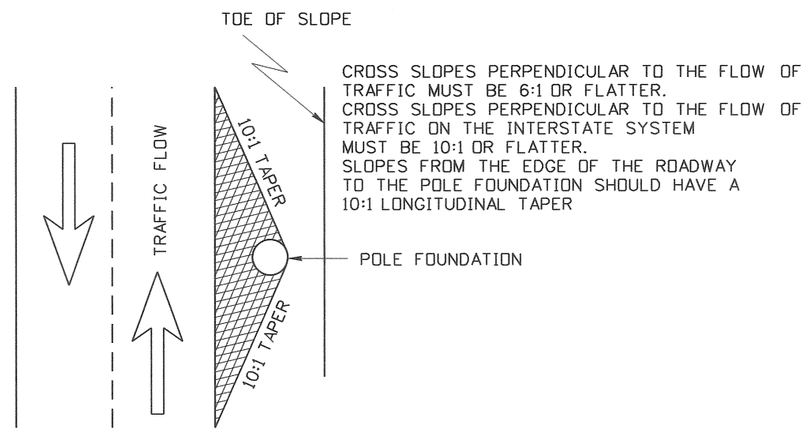

FOUNDATION GRADING / SLOPE TREATMENT

POLE FOUNDATION SCHEDULE

POLE TYPE	MT.HT.	MASTARM LENGTH	FOUNDATION TYPE	X	Y	HOOPS			VERTICAL RODS			CU. YDS. CONCRETE
						NO.	SIZE	LIN.FT.	NO.	SIZE	LIN.FT.	
PEDESTRIAN SIGNAL POLE	-	-	A	2'-0"	5'-0"	4	#4	20'-10"	6	#4	25'-6"	.6
LIGHT POLE	30'	ALL	A	2'-0"	5'-0"	4	#4	20'-10"	6	#4	25'-6"	.6
LIGHT POLE	35'	ALL	B	2'-6"	7'-0"	4	#4	27'-2"	6	#6	37'-6"	1.3
LIGHT POLE	40'-50'	ALL	C	3'-0"	8'-0"	5	#4	41'-10"	8	#6	58'-0"	2.1
SIGNAL POLE		20' - 45'	D	3'-0"	9'-0"	5	#4	41'-10"	8	#6	66'-0"	2.4
PEDESTRIAN PUSHBUTTON POLE	4'-0"	-	E	1'-6"	2'-6"	-	-	-	-	-	-	.2
DUAL MASTARM SIGNAL POLE	-	ALL	F	3'-0"	12'-0"	8	#5	66'-10"	12	#6	135'-0"	3.1
SIGNAL POLE	-	50' - 55'	F	3'-0"	12'-0"	8	#5	66'-10"	12	#6	135'-0"	3.1

NOTES:

1. THE FOUNDATIONS SHALL BE LOCATED AS INDICATED ON THE PROJECT PLAN SHEETS.
2. FOUNDATION REBAR CAGES MAY BE WELDED IF THE STEEL REBAR CONFORMS TO ASTM A706/A706M AND ALL WELDING CONFORMS TO ANSI/AWS D1.4 (STRUCTURAL WELDING CODE - REINFORCING STEEL).
3. REBAR IN POLE FOUNDATIONS SHALL BE 60 KSI STEEL.
4. STEEL TEMPLATE REQUIRED FOR ANCHOR BOLT PLACEMENT.
5. SPARE STUBOUTS WHEN SHOWN ON PLAN SHEETS SHALL BE TERMINATED WITH A STEEL COUPLING AND FOAM PLUG AT BOTH ENDS.
6. CLASS 40B CONCRETE SHALL BE USED IN POLE FOUNDATIONS.
7. CONCRETE FOUNDATIONS SHALL ACHIEVE 100% STRENGTH AND CURE FOR A MINIMUM OF 7 DAYS BEFORE ANY LOADING IS APPLIED.
8. FIBER JOINT MATERIAL WILL BE PLACED AROUND POLE FOUNDATION WHEN POLE FOUNDATION IS IN CONTACT WITH SIDEWALK.
9. ELEVATION OF POLE FOUNDATION SHALL MATCH THE ADJACENT PAVEMENT EDGE OR SIDEWALK ELEVATION.
10. ANCHOR BASE ASSEMBLIES SHALL BE INSTALLED AND TIGHTENED IN ACCORDANCE WITH SUBSECTION 619.03 OF THE ITD STANDARD SPECIFICATIONS FOR HIGHWAY CONSTRUCTION AND THE SUPPLEMENTAL SPECIFICATIONS.

REVISIONS

NO.	DATE	BY	NO.	DATE	BY	NO.	DATE	BY
1	08-96	HEB						
2	07-03	HEB						
3	05-05	HEB						
4	07-10	EBG						

SCALES SHOWN ARE FOR 11" X 17" PRINTS ONLY

CADD FILE NAME: i7c_0710.std

DRAWING DATE: DECEMBER, 1994

IDAHO TRANSPORTATION DEPARTMENT

BOISE IDAHO

ASSISTANT CHIEF ENGINEER (DEVELOPMENT)

CHIEF ENGINEER

STANDARD DRAWING

MASTARM SIGNAL POLE, LIGHTING POLE AND PEDESTRIAN POLE FOUNDATION DETAILS

English

STANDARD DRAWING NO.

I-7-C

SHEET 1 OF 1

PROFESSIONAL ENGINEER REGISTERED 6260 7/12/10 STATE OF IDAHO CARL D. MAIN

GENERAL NOTES

SEE SIGNING ERECTION SPECIFICATIONS FOR DIMENSIONS "G", "H", "P", "Q", AND "R".

IF THE DEPTH OF THE POST IS OUTSIDE THE LIMITS SHOWN, THE TEMPLATE SHOULD BE ADJUSTED SO THE ANCHORS ARE (3 11/16" PLUS THE DEPTH OF THE POST) APART.

INSTALLATION NOTES

Wrench sizes required: 7/8", 1-1/16".

BRACKET ASSEMBLY

ASSEMBLE BRACKETS TO POST WITH BOLTS PROVIDED. SQUARE AND TIGHTEN. (ITEMS ① ② ③ AND ④.)
BOLTS ②, LOCKWASHERS ③, AND NUT ④ DO NOT HAVE SPECIFIC REQUIREMENTS AND SHOULD BE MADE AS TIGHT AS POSSIBLE WITH CONVENTIONAL WRENCHES.

HINGE ASSEMBLY

BUTT UPPER AND LOWER POSTS TOGETHER ON FLAT SURFACE.
PLACE HINGE PLATES ⑩ ON OUTER FLANGES AND SECURE WITH 1/2-UNC 1-1/2" BOLTS ③, ④ AND ⑪ - SNUG BUT DO NOT TIGHTEN.
MAKE SURE UPPER AND LOWER POSTS ARE IN ALIGNMENT; THEN TIGHTEN ALL NUTS ④ TO PROOF LOAD - 1/2 OF A TURN BEYOND SNUG.

ANCHOR ASSEMBLY

ASSEMBLE COUPLING ANCHORS ⑨ TO INSTALLATION TEMPLATE, SEE STANDARD DRAWING I-8-A-2.
LOWER ENTIRE ANCHOR ASSEMBLY INTO FRESH CONCRETE AND VIBRATE INTO POSITION SO THAT THE TOPS OF THE INDIVIDUAL ANCHORS ⑨ ARE FLUSH WITH THE FINISHED TOP SURFACE OF THE FOOTINGS.
KEEP THE TEMPLATE LEVEL UNTIL CONCRETE HAS SET.

COUPLING ASSEMBLY

SUSPEND POST OVER FOOTING AND INSERT SPECIAL BOLTS ⑤ THROUGH BRACKETS ①.
BELOW BRACKET, THREAD COUPLINGS ⑥ INTO ANCHORS ⑨ BUT LEAVE LOOSE.
LOWER POST WITH SPECIAL BOLTS ⑤ ONTO LOOSE COUPLINGS ⑥ AND THREAD SPECIAL BOLTS ONTO COUPLINGS. THREAD COUPLINGS ALL THE WAY INTO ANCHORS ⑨.
TIGHTEN SPECIAL BOLTS ⑤ WITH 1-1/16" WRENCH. NOTE! DO NOT PLACE TORQUE ACROSS NECKED DOWN PORTION OF COUPLING - WRENCH FLATS ARE PROVIDED ON EITHER SIDE FOR PROPER TIGHTENING. MAKE AS TIGHT AS POSSIBLE WITH CONVENTIONAL WRENCHES.
IF POST IS NOT PLUMB, INSERT SHIMS ⑦ AND ⑧ BETWEEN COUPLINGS ⑥ AND ANCHORS ⑨.
NO MORE THAN TWO SHIMS UNDERNEATH ANY ONE COUPLING AND NO MORE THAN THREE SHIMS UNDERNEATH ANY TWO COUPLINGS.

POST TYPE
A-1 — W6 X 9

BREAKSAFE BASE ASSEMBLY TYPE AI6 - LP

ITEM	PARTS DESCRIPTION	QTY. POST
① Bracket	6061 T6 Alum.	2
② Bolt	1/2"-13 UNC x 2-1/4", Hex.Hd.	8
③ Lockwasher	1/2" galvanized	16
④ Nut	Hex 1/2" -13 UNC	16
⑤ Special Bolt	5/8"-11 UNC	4
⑥ Coupling	Small 5/8"-11 UNC 2A & 2B,	4
⑦ Shim	Horseshoe, 18 Gauge Galv.Steel Sheet	2
⑧ Shim	Horseshoe, 14 Gauge Galv.Steel Sheet	2
⑨ Anchor	304 Stainless Steel Ferrule	4
⑩ Hinge Plate	Small .071" Section, Galv.	4
⑪ Bolt	1/2" -13 UNC x 1-1/2", Hex.Hd.	8

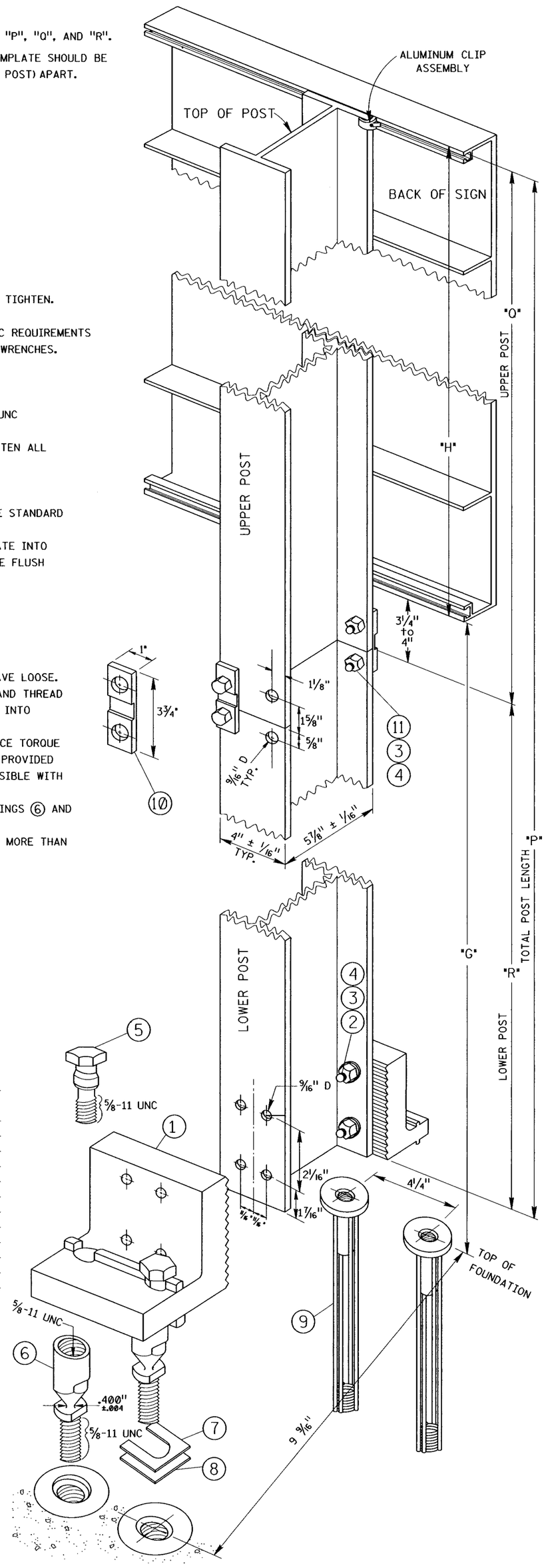

REVISIONS

NO.	DATE	BY	NO.	DATE	BY	NO.	DATE	BY
1	12-07	HEB						

SCALES SHOWN ARE FOR 11" X 17" PRINTS ONLY

CADD FILE NAME: i8a1207.std

DRAWING DATE: DECEMBER, 2007

IDAHO TRANSPORTATION DEPARTMENT

BOISE IDAHO

ASSISTANT CHIEF ENGINEER (DEVELOPMENT)

CHIEF ENGINEER

STANDARD DRAWING

BREAKAWAY SIGN POST INSTALLATION TYPE A-1

REQUIRES STD. DWG. I-8-A-2

STANDARD DRAWING NO. I-8-A-1

English

SHEET 1 OF 1

PROFESSIONAL REGISTERED ENGINEER STATE OF IDAHO 5507 BARRY JENNINGS

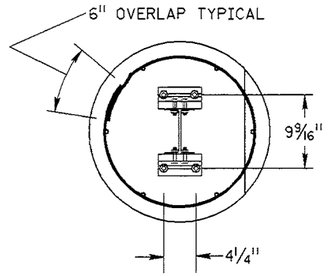

TYPICAL TOP VIEW

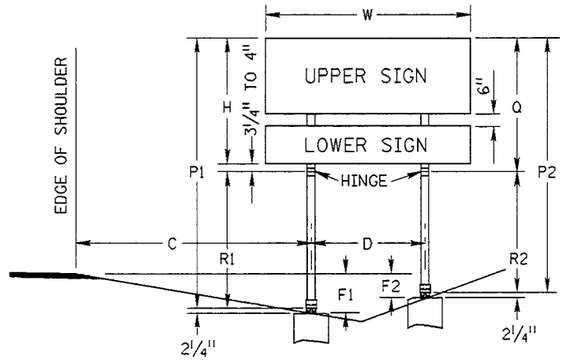

TYPICAL SIGN INSTALLATION

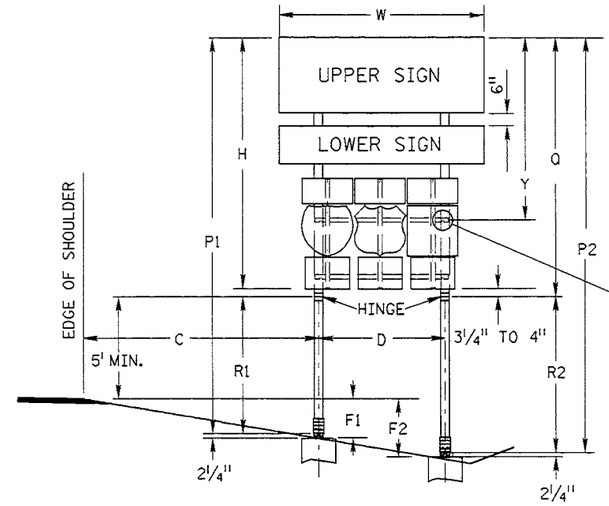

NO. OF SIGNS	SIGN PANEL HEIGHT	Y
1	2'-0"	3'-1"
1	3'-0"	4'-1"
2	2'-0"	5'-7"
2	3'-0"	7'-7"
2	2'-0" 3'-0"	6'-7"

NOTE:
INCREASE "Y" DIMENSION 12 1/2" WHEN A 24" x 12" AUXILIARY SIGN IS MOUNTED ABOVE THE ROUTE MARKERS ATTACHED TO THE SIGN BRACKETS.

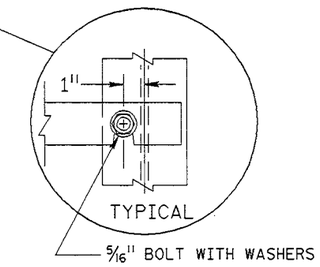

TYPICAL SIGN INSTALLATION
WITH ROUTE MARKERS

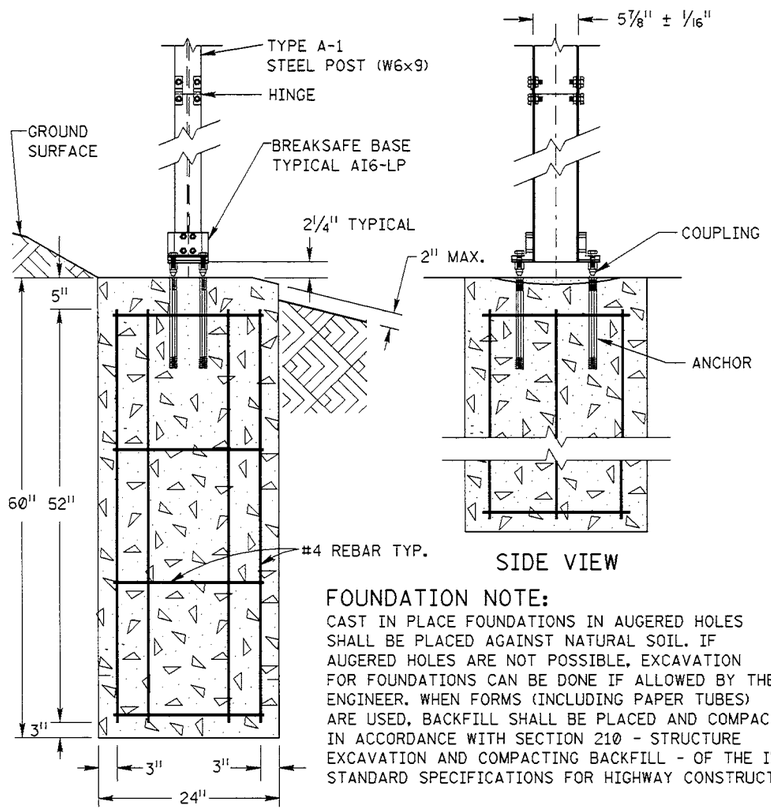

FRONT VIEW

SIDE VIEW

FOUNDATION NOTE:
CAST IN PLACE FOUNDATIONS IN AUGERED HOLES SHALL BE PLACED AGAINST NATURAL SOIL. IF AUGERED HOLES ARE NOT POSSIBLE, EXCAVATION FOR FOUNDATIONS CAN BE DONE IF ALLOWED BY THE ENGINEER. WHEN FORMS (INCLUDING PAPER TUBES) ARE USED, BACKFILL SHALL BE PLACED AND COMPACTED IN ACCORDANCE WITH SECTION 210 - STRUCTURE EXCAVATION AND COMPACTING BACKFILL - OF THE IDAHO STANDARD SPECIFICATIONS FOR HIGHWAY CONSTRUCTION.

MATERIAL QUANTITIES	
CONCRETE	0.6 CU. YDS.
6 VERT. RODS	26 LN. FT.
4 HOOPS	20.85 LN. FT.

TYPE A FOUNDATIONS

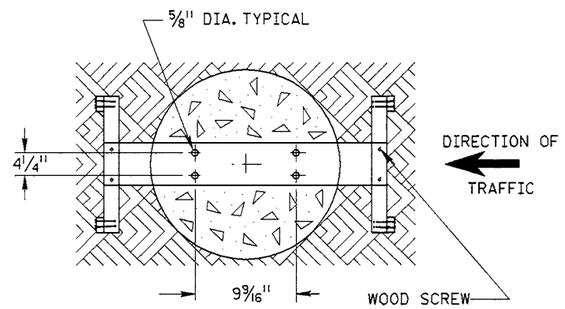

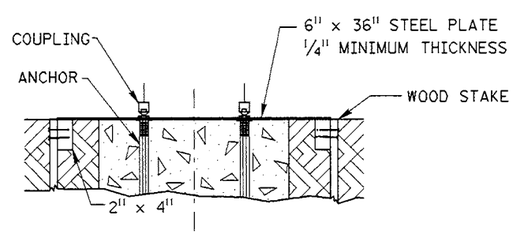

TYPICAL ANCHOR TEMPLATE
FOR POST TYPE A-1

LEGEND

- C DISTANCE FROM EDGE OF SHOULDER TO CENTER LINE OF FIRST POST.
- D DISTANCE BETWEEN POSTS.
- F VERTICAL DISTANCE FROM THE TOP OF FOUNDATION UP TO THE ELEVATION OF THE EDGE OF THE SHOULDER.
- P TOTAL POST LENGTH.
- Q LENGTH OF UPPER POST.
- R LENGTH OF LOWER POST. (7' MIN.)
- H OVERALL HEIGHT OF SIGN FACE(S).
- W OVERALL WIDTH OF SIGN FACE(S).

NOTES:

1. SEE SIGNING ERECTION SPECIFICATIONS FOR DIMENSIONS OF EACH SIGN INSTALLATION.
2. ANCHOR TEMPLATES SHOULD BE DESIGNED SO THE ANCHORS ARE HELD SOLID AND LEVEL. AN ACCURACY OF 1/16" IS REQUIRED.
3. NO PART OF THE FOUNDATION OR NON-BREAKAWAY PART OF THE BASE SHOULD PROTRUDE MORE THAN 2" ABOVE THE GROUND SURFACE.
4. FOUNDATION REBAR CAGES MAY BE WELDED IF THE REBAR CONFORMS TO ASTM A706/A706M AND ALL WELDING CONFORMS TO ANSI/AWS D1.4 (STRUCTURAL WELDING CODE - REINFORCING STEEL).
5. CONCRETE FOUNDATIONS SHALL CURE FOR A MINIMUM OF 7 DAYS BEFORE ANY LOADING IS APPLIED.

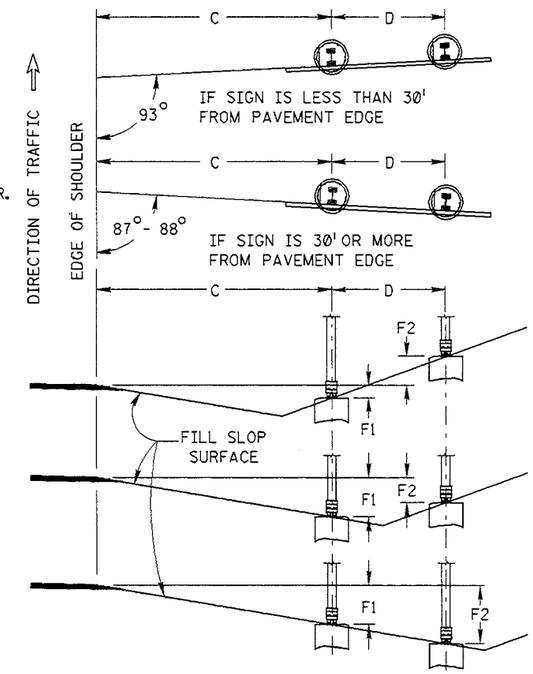

TYPICAL FOUNDATION LOCATION

REVISIONS												
NO.	DATE	BY	NO.	DATE	BY	NO.	DATE	BY	NO.	DATE	BY
1	04-94	HEB									
2	08-96	HEB									
3	07-98	HEB									
4	12-99	HEB									

SCALES SHOWN ARE FOR 11" x 17" PRINTS ONLY

CADD FILE NAME
18a11299.std

DRAWING DATE:
APRIL, 1992

IDAHO TRANSPORTATION DEPARTMENT

BOISE, IDAHO

ASSISTANT CHIEF ENGINEER (DEVELOPMENT)

CHIEF ENGINEER

STANDARD DRAWING

BREAKAWAY SIGN POST INSTALLATION TYPE A-1

REQUIRES STD. DWG. I-8-A-1

STANDARD DRAWING NO.
I-8-A-2

SHEET 1 OF 1

PROFESSIONAL ENGINEER
REGISTERED
Michael R. Villnave
9352
12/23/99
STATE OF IDAHO
MICHAEL R. VILLNAVE

GENERAL NOTES

SEE SIGNING ERECTION SPECIFICATIONS FOR BASE BRACKET NUMBER AND DIMENSIONS "G", "H", "P", "Q", AND "R".

INSTALLATION NOTES

WRENCH SIZES REQUIRED: 7/8", 1-1/4", 1-7/16", 1-5/8"

BRACKET ASSEMBLY

ALL BRACKETS TO BE PERMANENTLY LABELED WITH APPROPRIATE BRACKET TYPE AND BRACKET SELECTION NUMBER.

THE BRACKET NUMBER IS USUALLY GIVEN IN THE SIGNING ERECTION SPECIFICATIONS. IF NOT SHOWN, THE BRACKET NUMBER MAY BE DETERMINED FROM THE BRACKET SELECTION TABLE SHOWN BELOW. LOCATE THE INTERSECTION OF THE SIGN MOUNTING HEIGHT (DIMENSION "G") AND THE POST LENGTH (DIMENSION "P") IN THE BRACKET SELECTION TABLE. THE INTERSECTION WILL BE EITHER IN ZONE 1, 2, OR 3 WHICH CORRESPONDS TO BRACKET NUMBERS 1, 2, AND 3.

ASSEMBLE BRACKETS TO POST WITH BOLTS PROVIDED. SQUARE AND TIGHTEN. ITEMS (1) (2) (3) (4) (5) (6) AND (7). MAKE AS TIGHT AS POSSIBLE WITH CONVENTIONAL WRENCHES.

POST LENGTH
(DIMENSION P)

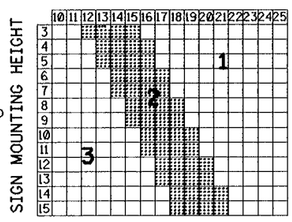

POST DIMENSIONS					
POST TYPE	SIZE & WEIGHT	DEPTH	WEBB THICK-NESS	FLANGE WIDTH	FLANGE THICK-NESS
A-2	W8-10	7 7/8"	3/16"	4"	3/16"
A-3	W8-13	8"	1/4"	4"	1/4"
A-4	W8-18	8 1/8"	1/4"	5 1/4"	5/16"

BRACKET SELECTION TABLE FOR BREAKSAFE BASE TYPE B-525-LP

HINGE ASSEMBLY

BUTT UPPER AND LOWER POSTS TOGETHER ON FLAT SURFACE.

PLACE HINGE PLATES (13) ON OUTER FLANGES AND SECURE WITH 3/4" -UNC BOLTS (14) (15) AND (16) - SNUG BUT DO NOT TIGHTEN.

MAKE SURE UPPER AND LOWER POSTS ARE IN ALIGNMENT: THEN TIGHTEN ALL NUTS (16) TO PROOF LOAD - 1/2 OF A TURN BEYOND SNUG.

ANCHOR ASSEMBLY

ASSEMBLE COUPLING ANCHORS (12) TO INSTALLATION TEMPLATE. SEE STANDARDARD DRAWING I-8-B-2.

LOWER ENTIRE ANCHOR ASSEMBLY INTO FRESH CONCRETE AND VIBRATE INTO POSITION SO THAT THE TOPS OF THE INDIVIDUAL ANCHORS (12) ARE FLUSH WITH THE FINISHED TOP SURFACE OF THE FOOTINGS. ALIGN AND LEVEL THE TEMPLATE AND KEEP IN PLACE UNTIL CONCRETE HAS SET.

COUPLING ASSEMBLY

SUSPEND POST OVER FOOTING AND INSERT SPECIAL BOLTS (8) THROUGH BRACKETS (1).

BELOW BRACKET, THREAD COUPLINGS (9) INTO ANCHORS (12) BUT LEAVE LOOSE.

LOWER POST WITH SPECIAL BOLTS (8) ONTO LOOSE COUPLINGS (9) AND THREAD SPECIAL BOLTS INTO COUPLINGS. THREAD COUPLINGS ALL THE WAY INTO ANCHORS (12).

TIGHTEN SPECIAL BOLTS (8) WITH 1-5/8" WRENCH AND MAKE AS TIGHT AS POSSIBLE WITH CONVENTIONAL WRENCHES. **NOTE:** DO NOT PLACE TORQUE ACROSS NECKED DOWN PORTION OF COUPLING - WRENCH FLATS ARE PROVIDED ON EITHER SIDE FOR PROPER TIGHTENING.

IF POST IS NOT PLUMB, INSERT SHIMS (10) AND (11) BETWEEN COUPLINGS (9) AND ANCHORS (12).

NO MORE THAN TWO SHIMS UNDERNEATH ANY ONE COUPLING AND NO MORE THAN THREE SHIMS UNDERNEATH ANY TWO COUPLINGS.

BREAKSAFE BASE ASSEMBLY TYPE B-525-LP

ITEM	PARTS DESCRIPTION		QTY. POST
(1)	Bracket	Alum.(See Bracket Selection Table)	2
(2)	Bolt	Top, 1/2"-13 UNCx2-1/2", Hex.Hd.	4
(3)	Bolt	Middle, 1/2"-13 UNCx2-3/4", Hex.Hd.	4
(4)	Bolt	Bottom, 1/2"-13 UNCx3", Hex.Hd.	4
(5)	Cap Screw	Bracket, 1/2"-13 UNCx1-1/4", Hex.Hd.	4
(6)	Lockwasher	1/2" Galvanized	16
(7)	Nut	Hex. 1/2"-13 UNC	12
(8)	Special Bolt	1-8 UNC.	4
(9)	Coupling	Large, 1-8 UNC, 2A & 2B	4
(10)	Shim	Horseshoe, 18 Gauge Galv.	2
(11)	Shim	Horseshoe, 14 Gauge Galv.	2
(12)	Anchor	1-8 UNC	4
(13)	Hinge Plate	Large, .113" Section with 0.5 Inch hole	4
(14)	Bolt	Hinge, 3/4"-10 UNCx2-1/4", Hex.Hd.	8
(15)	Lockwasher	3/4" Galvanized	8
(16)	Nut	Hex 3/4"-10 UNC	8

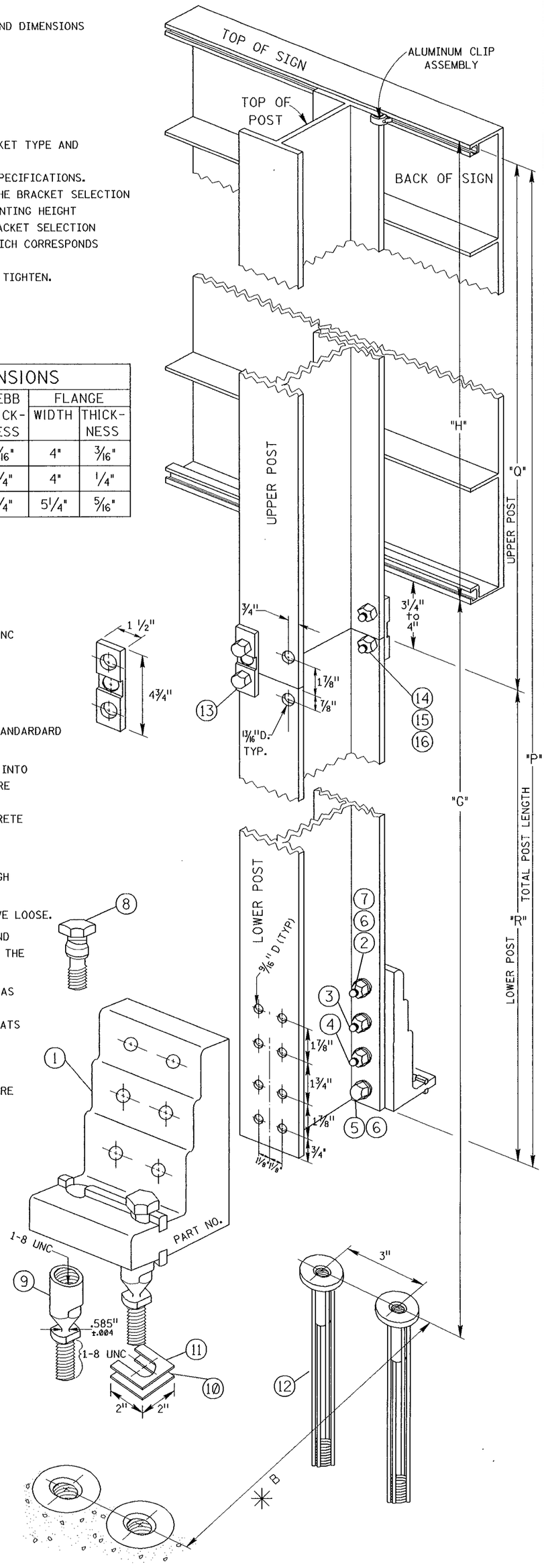

✳SEE STANDARD DRAWING I-8-B-2

REVISIONS											
NO.	DATE	BY	NO.	DATE	BY	NO.	DATE	BY	NO.	DATE	BY
1	08-96	HEB									
2	12-99	HEB									

SCALES SHOWN ARE FOR 11" x 17" PRINTS ONLY

CADD FILE NAME 18b1299.std

DRAWING DATE: APRIL, 1992

IDAHO TRANSPORTATION DEPARTMENT

BOISE, IDAHO

ASSISTANT CHIEF ENGINEER (DEVELOPMENT)

CHIEF ENGINEER

STANDARD DRAWING

BREAKAWAY SIGN POST INSTALLATION TYPE A-2, A-3, & A-4

REQUIRES STD. DWG. I-8-B-2

STANDARD DRAWING NO. I-8-B-1

SHEET 1 OF 1

MICHAEL L. R. VILLNAVE
STATE OF IDAHO
9352
12/23/99
PROFESSIONAL ENGINEER
REGISTERED

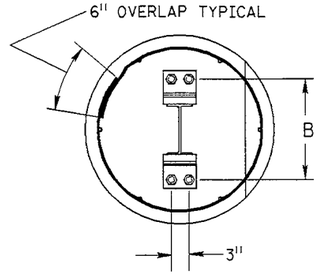

TYPICAL TOP VIEW

DIMENSION B FOR SIGN POST TYPES A-2, A-3, AND A-4		
BREAKSAFE SYSTEM TYPE B-525-LP		
BRACKET #1	BRACKET #2	BRACKET #3
DEPTH OF POST SECTION PLUS 7 15/16"	DEPTH OF POST SECTION PLUS 8 1/16"	DEPTH OF POST SECTION PLUS 8 1/8"

SIGN POST ANCHOR INSTALLATION CHART

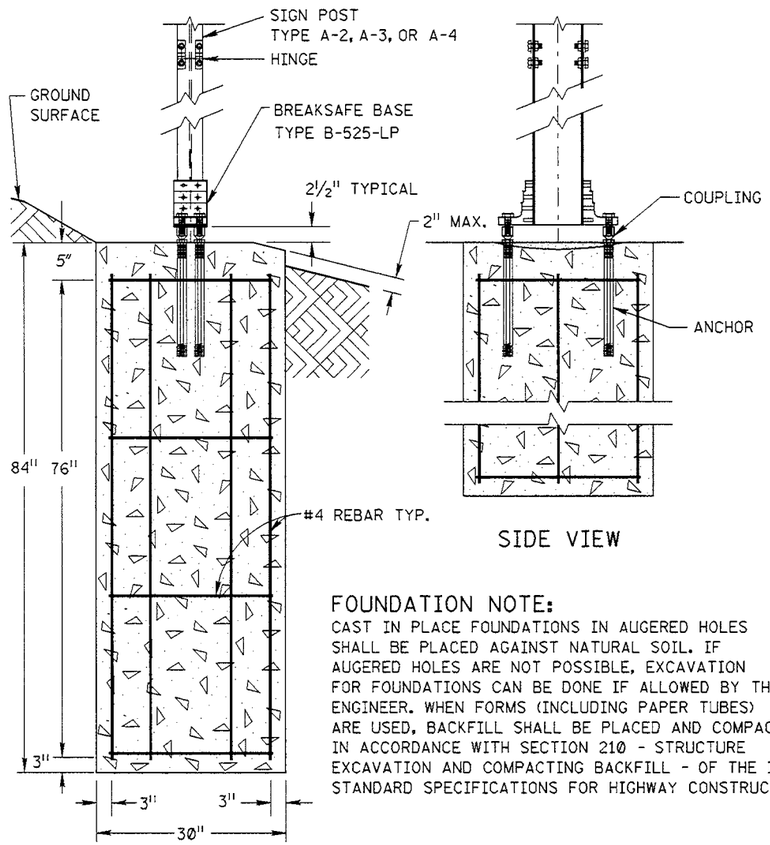

SIDE VIEW

FRONT VIEW

FOUNDATION NOTE:
CAST IN PLACE FOUNDATIONS IN AUGERED HOLES SHALL BE PLACED AGAINST NATURAL SOIL. IF AUGERED HOLES ARE NOT POSSIBLE, EXCAVATION FOR FOUNDATIONS CAN BE DONE IF ALLOWED BY THE ENGINEER. WHEN FORMS (INCLUDING PAPER TUBES) ARE USED, BACKFILL SHALL BE PLACED AND COMPACTED IN ACCORDANCE WITH SECTION 210 - STRUCTURE EXCAVATION AND COMPACTING BACKFILL - OF THE IDAHO STANDARD SPECIFICATIONS FOR HIGHWAY CONSTRUCTION.

MATERIAL QUANTITIES	
CONCRETE	1.3 CU. YDS.
6 VERT. RODS	38 LN. FT.
4 HOOPS	27.13 LN. FT.

TYPE B FOUNDATIONS

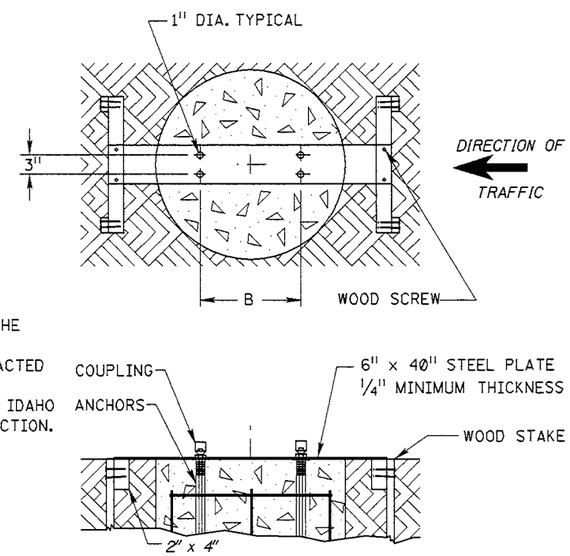

TYPICAL ANCHOR TEMPLATE
FOR POST TYPE A-2, A-3, & A-4

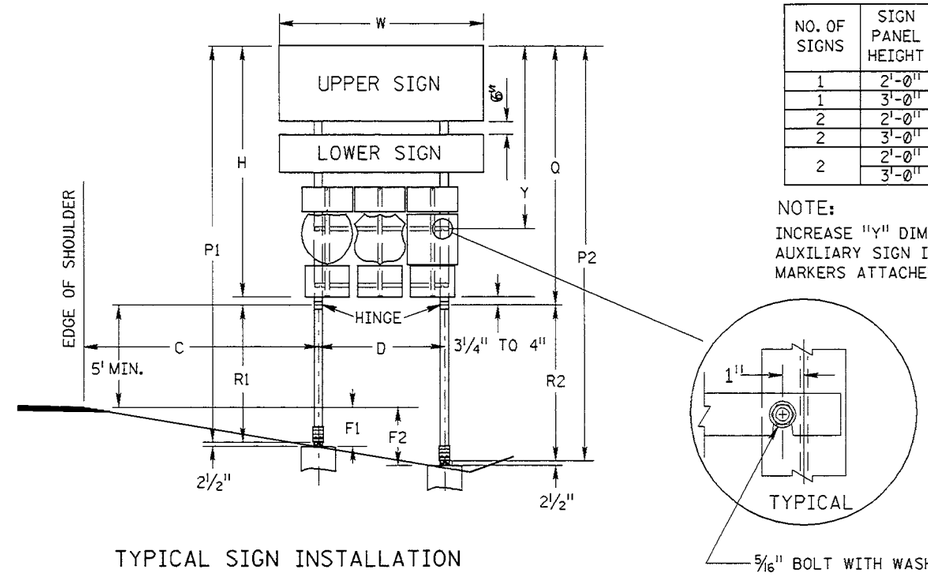

TYPICAL SIGN INSTALLATION
WITH ROUTE MARKERS

NO. OF SIGNS	SIGN PANEL HEIGHT	Y
1	2'-0"	3'-1"
1	3'-0"	4'-1"
2	2'-0"	5'-7"
2	3'-0"	7'-7"
2	2'-0" / 3'-0"	6'-7"

NOTE:
INCREASE "Y" DIMENSION 12 1/2" WHEN A 24" x 12" AUXILIARY SIGN IS MOUNTED ABOVE THE ROUTE MARKERS ATTACHED TO THE SIGN BRACKETS.

LEGEND

- C DISTANCE FROM EDGE OF SHOULDER TO CENTER LINE OF FIRST POST.
- D DISTANCE BETWEEN POSTS.
- F VERTICAL DISTANCE FROM THE TOP OF FOUNDATION UP TO THE ELEVATION OF THE EDGE OF THE SHOULDER.
- P TOTAL POST LENGTH.
- Q LENGTH OF UPPER POST.
- R LENGTH OF LOWER POST. (7' MIN.)
- H OVERALL HEIGHT OF SIGN FACE(S).
- W OVERALL WIDTH OF SIGN FACE(S).

NOTES:

1. SEE SIGNING ERECTION SPECIFICATIONS FOR DIMENSIONS OF EACH SIGN INSTALLATION.
2. ANCHOR TEMPLATES SHOULD BE DESIGNED SO THE ANCHORS ARE HELD SOLID AND LEVEL. AN ACCURACY OF 1/16" IS REQUIRED.
3. NO PART OF THE FOUNDATION OR NON-BREAKAWAY PART OF THE BASE SHOULD PROTRUDE MORE THAN 2" ABOVE THE GROUND SURFACE.
4. FOUNDATION REBAR CAGES MAY BE WELDED IF THE REBAR CONFORMS TO ASTM A706/A706M AND ALL WELDING CONFORMS TO ANSI/AWS D1.4 (STRUCTURAL WELDING CODE - REINFORCING STEEL).
5. CONCRETE FOUNDATIONS SHALL CURE FOR A MINIMUM OF 7 DAYS BEFORE ANY LOADING IS APPLIED.

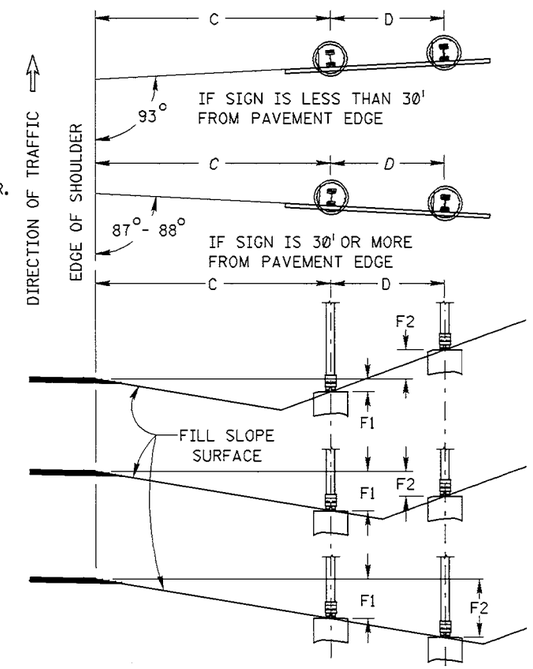

TYPICAL FOUNDATION LOCATION

REVISIONS											
NO.	DATE	BY	NO.	DATE	BY	NO.	DATE	BY	NO.	DATE	BY
1	04-94	HEB									
2	08-96	HEB									
3	07-98	HEB									
4	12-99	HEB									

SCALES SHOWN ARE FOR 11" x 17" PRINTS ONLY

CADD FILE NAME 18b21299.std

DRAWING DATE: APRIL, 1992

IDAHO TRANSPORTATION DEPARTMENT

BOISE, IDAHO

ASSISTANT CHIEF ENGINEER (DEVELOPMENT)

CHIEF ENGINEER

STANDARD DRAWING

BREAKAWAY SIGN POST INSTALLATION TYPE A-2, A-3, & A-4

REQUIRES STD. DWG. I-8-B-1

STANDARD DRAWING NO. I-8-B-2

SHEET 1 OF 1

PROFESSIONAL ENGINEER REGISTERED 9352 12/23/99 STATE OF IDAHO MICHAEL R. VILLNAVE

GENERAL NOTES

SEE SIGNING ERECTION SPECIFICATIONS FOR BASE BRACKET NUMBER AND DIMENSIONS "G", "H", "P", "Q", AND "R".

INSTALLATION NOTES

WRENCH SIZES REQUIRED: 1 -1/16 ", 1-1/4", 1-7/16", 1-5/8"

BRACKET ASSEMBLY

ALL BRACKETS TO BE PERMANENTLY LABELED WITH APPROPRIATE BRACKET TYPE AND BRACKET SELECTION NUMBER.

THE BRACKET NUMBER IS USUALLY GIVEN IN THE SIGNING ERECTION SPECIFICATIONS. IF NOT SHOWN, THE BRACKET NUMBER MAY BE DETERMINED FROM THE BRACKET SELECTION TABLE SHOWN BELOW. LOCATE THE INTERSECTION OF THE SIGN MOUNTING HEIGHT (DIMENSION "G") AND THE POST LENGTH (DIMENSION "P") IN THE BRACKET SELECTION TABLE. THE INTERSECTION WILL BE EITHER IN ZONE 1, 2, OR 3 WHICH CORRESPONDS TO BRACKET NUMBERS 1, 2, AND 3.

ASSEMBLE BRACKETS TO POST WITH BOLTS PROVIDED. SQUARE AND TIGHTEN ITEMS (1) (2) (3) (4) (5) (6) AND (7). MAKE AS TIGHT AS POSSIBLE WITH CONVENTIONAL WRENCHES.

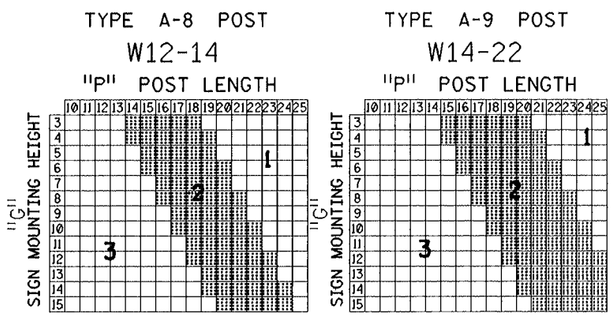

BRACKET SELECTION TABLE FOR BREAKSAFE BASE TYPE B-650-LP

POST DIMENSIONS					
POST TYPE	SIZE & WEIGHT	DEPTH	WEBB THICK-NESS	FLANGE WIDTH	FLANGE THICK-NESS
A-8	W12-14	11 7/8"	3/16"	4"	1/4"
A-9	W14-22	13 3/4"	1/4"	5"	5/16"

HINGE ASSEMBLY

BUTT UPPER AND LOWER POSTS TOGETHER ON FLAT SURFACE.

PLACE HINGE PLATES (13) ON OUTER FLANGES AND SECURE WITH 3/4" -UNC BOLTS (14) (15) AND (16) - SNUG BUT DO NOT TIGHTEN.

MAKE SURE UPPER AND LOWER POSTS ARE IN ALIGNMENT; THEN TIGHTEN ALL NUTS (16) TO PROOF LOAD - 1/2 OF A TURN BEYOND SNUG.

ANCHOR ASSEMBLY

ASSEMBLE COUPLING ANCHORS (12) TO INSTALLATION TEMPLATE, SEE STANDARD DRAWING I-8-C-2.

LOWER ENTIRE ANCHOR ASSEMBLY INTO FRESH CONCRETE AND VIBRATE INTO POSITION SO THAT THE TOPS OF THE INDIVIDUAL ANCHORS (12) ARE FLUSH WITH THE FINISHED TOP SURFACE OF THE FOOTINGS. ALIGN AND LEVEL THE TEMPLATE AND KEEP IN PLACE UNTIL CONCRETE HAS SET.

COUPLING ASSEMBLY

SUSPEND POST OVER FOOTING AND INSERT SPECIAL BOLTS (8) THROUGH BRACKETS (1).

BELOW BRACKET, THREAD COUPLINGS (9) INTO ANCHORS (12) BUT LEAVE LOOSE.

LOWER POST WITH SPECIAL BOLTS (8) ONTO LOOSE COUPLINGS (9) AND THREAD SPECIAL BOLTS INTO COUPLINGS. THREAD COUPLINGS ALL THE WAY INTO ANCHORS (12).

TIGHTEN SPECIAL BOLTS (8) WITH 1-5/8" WRENCH AND MAKE AS TIGHT AS POSSIBLE WITH CONVENTIONAL WRENCHES. NOTE! DO NOT PLACE TORQUE ACROSS NECKED DOWN PORTION OF COUPLING - WRENCH FLATS ARE PROVIDED ON EITHER SIDE FOR PROPER TIGHTENING.

IF POST IS NOT PLUMB, INSERT SHIMS (10) AND (11) BETWEEN COUPLINGS (9) AND ANCHORS (12).

NO MORE THAN TWO SHIMS UNDERNEATH ANY ONE COUPLING AND NO MORE THAN THREE SHIMS UNDERNEATH ANY TWO COUPLINGS.

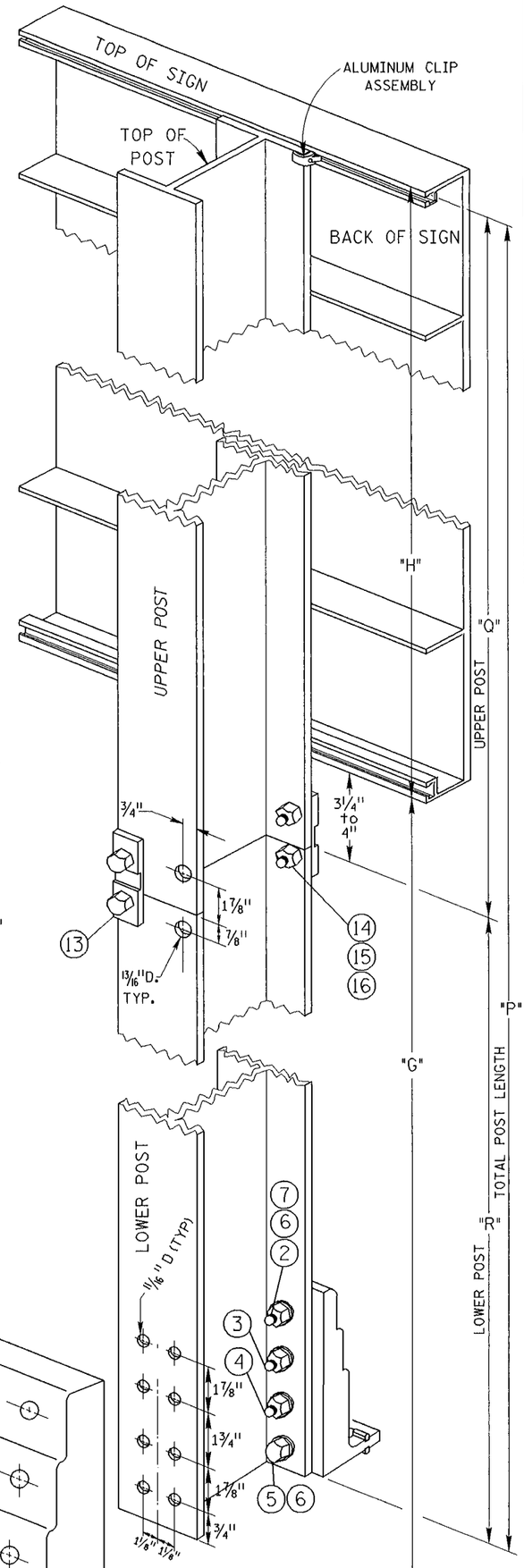

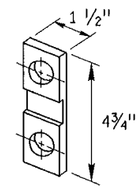

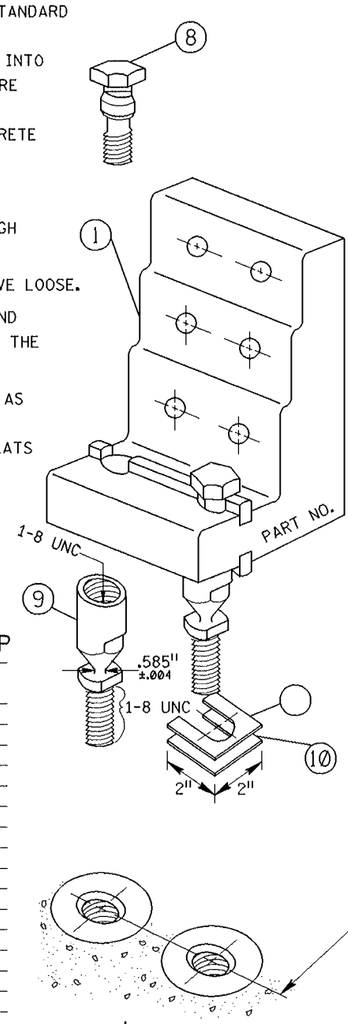

✳ SEE STANDARD DRAWING I-8-C-2

BREAKSAFE BASE ASSEMBLY TYPE B-650-LP

ITEM	PARTS DESCRIPTION		QTY. POST
(1)	Bracket	Alum.(See Bracket Selection Table)	2
(2)	Bolt	Top, 5/8"-13 UNCx2-3/4", Hex.Hd.	4
(3)	Bolt	Middle, 5/8"-13 UNCx3", Hex.Hd.	4
(4)	Bolt	Bottom, 5/8"-13 UNCx3 1/4", Hex.Hd.	4
(5)	Cap Screw	Bracket, 5/8"-13 UNCx1-1/4", Hex.Hd.	4
(6)	Lockwasher	5/8" Galvanized	16
(7)	Nut	Hex. 5/8"-13 UNC	12
(8)	Special Bolt	1-8 UNC.	4
(9)	Coupling	Large, 1-8 UNC, 2A & 2B	4
(10)	Shim	Horseshoe, 18 Gauge Galv.	2
(11)	Shim	Horseshoe, 14 Gauge Galv.	2
(12)	Anchor	1-8 UNC	4
(13)	Hinge Plate	Large, .113" Section	4
(14)	Bolt	Hinge, 3/4"-10 UNCx2-1/4", Hex.Hd.	8
(15)	Lockwasher	3/4" Galvanized	8
(16)	Nut	Hex 3/4"-10 UNC	8

REVISIONS

NO.	DATE	BY	NO.	DATE	BY	NO.	DATE	BY	NO.	DATE	BY
1	08-96	HEB									
2	12-99	HEB									

SCALES SHOWN ARE FOR 11" x 17" PRINTS ONLY

CADD FILE NAME 18c11299.std

DRAWING DATE: APRIL, 1992

IDAHO TRANSPORTATION DEPARTMENT

BOISE, IDAHO

ASSISTANT CHIEF ENGINEER (DEVELOPMENT)

CHIEF ENGINEER

STANDARD DRAWING

BREAKAWAY SIGN POST INSTALLATION TYPE A-8 & A-9

REQUIRES STD. DWG. I-8-C-2

STANDARD DRAWING NO. I-8-C-1

SHEET 1 OF 1

MICHAEL R. VILLNAVE — STATE OF IDAHO — REGISTERED PROFESSIONAL ENGINEER 9352 — 12/23/99

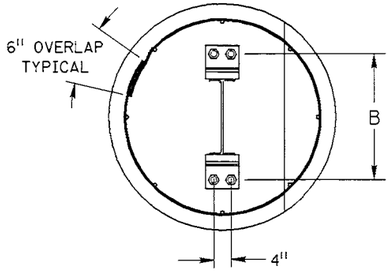

TYPICAL TOP VIEW

DIMENSION B FOR SIGN POST TYPES, A-8, AND A-9		
BREAKSAFE SYSTEM TYPE B-650-LP		
BRACKET #1	BRACKET #2	BRACKET #3
DEPTH OF POST SECTION PLUS 7 15/16"	DEPTH OF POST SECTION PLUS 8 1/16"	DEPTH OF POST SECTION PLUS 8 1/8"

SIGN POST ANCHOR INSTALLATION CHART

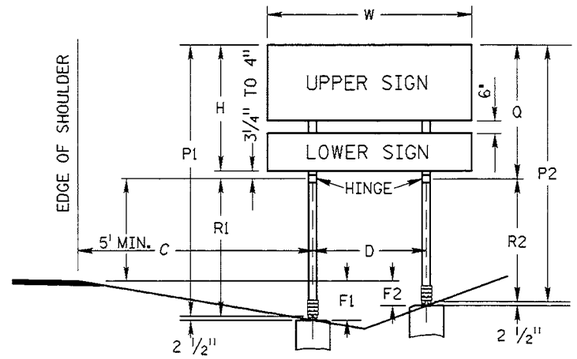

TYPICAL SIGN INSTALLATION

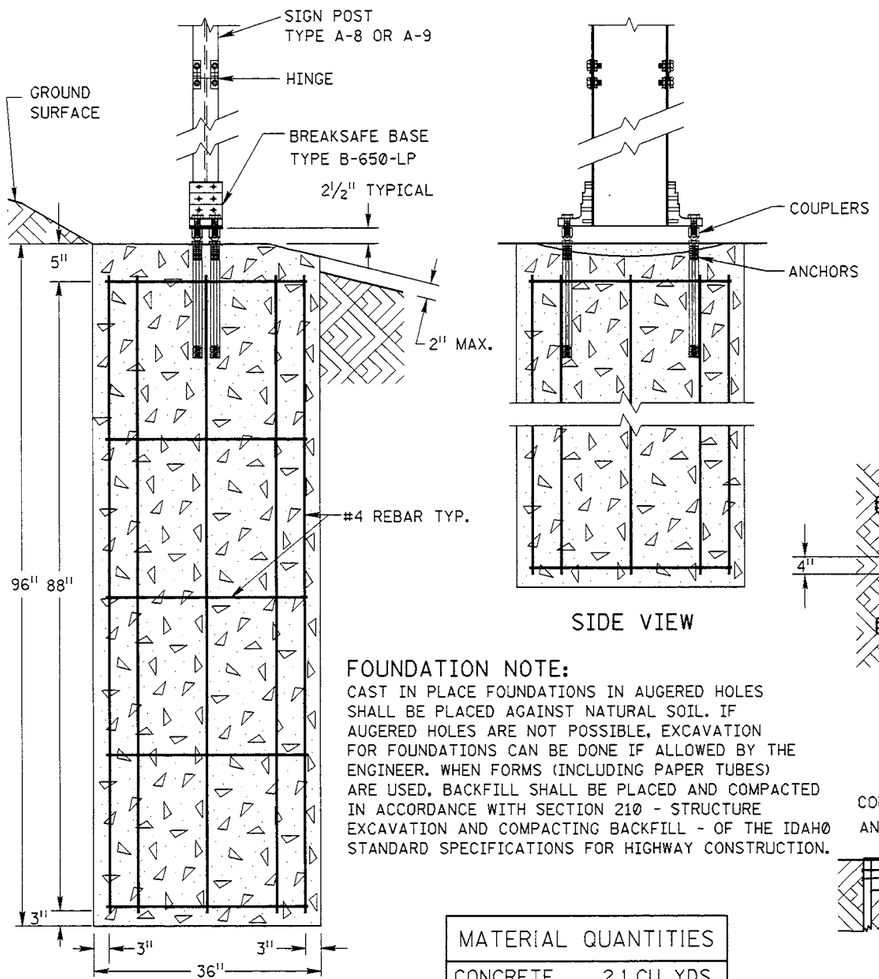

FRONT VIEW

SIDE VIEW

FOUNDATION NOTE:

CAST IN PLACE FOUNDATIONS IN AUGERED HOLES SHALL BE PLACED AGAINST NATURAL SOIL. IF AUGERED HOLES ARE NOT POSSIBLE, EXCAVATION FOR FOUNDATIONS CAN BE DONE IF ALLOWED BY THE ENGINEER. WHEN FORMS (INCLUDING PAPER TUBES) ARE USED, BACKFILL SHALL BE PLACED AND COMPACTED IN ACCORDANCE WITH SECTION 210 - STRUCTURE EXCAVATION AND COMPACTING BACKFILL - OF THE IDAHO STANDARD SPECIFICATIONS FOR HIGHWAY CONSTRUCTION.

MATERIAL QUANTITIES	
CONCRETE	2.1 CU. YDS.
8 VERT. RODS	60 LN. FT.
5 HOOPS	41.77 LN. FT.

TYPE C FOUNDATIONS

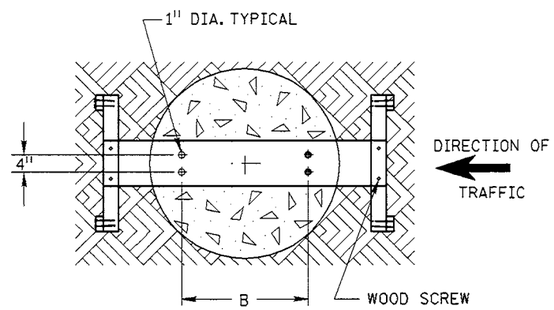

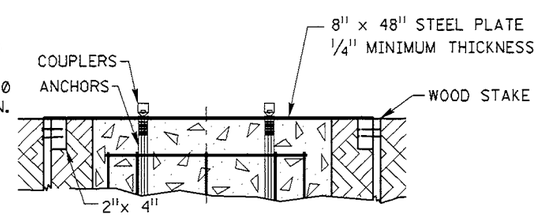

TYPICAL ANCHOR TEMPLATE
FOR POST TYPE A-8 OR A-9

LEGEND

- C DISTANCE FROM EDGE OF SHOULDER TO CENTER LINE OF FIRST POST.
- D DISTANCE BETWEEN POSTS.
- F VERTICAL DISTANCE FROM THE TOP OF FOUNDATION UP TO THE ELEVATION OF THE EDGE OF THE SHOULDER.
- P TOTAL POST LENGTH.
- Q LENGTH OF UPPER POST.
- R LENGTH OF LOWER POST. (7' MIN.)
- H OVERALL HEIGHT OF SIGN FACE(S).
- W OVERALL WIDTH OF SIGN FACE(S).

NOTES:

1. SEE SIGNING ERECTION SPECIFICATIONS FOR DIMENSIONS OF EACH SIGN INSTALLATION.
2. ANCHOR TEMPLATES SHOULD BE DESIGNED SO THE ANCHORS ARE HELD SOLID AND LEVEL. AN ACCURACY OF 1/16" IS REQUIRED.
3. NO PART OF THE FOUNDATION OR NON-BREAKAWAY PART OF THE BASE SHOULD PROTRUDE MORE THAN 2" ABOVE THE GROUND SURFACE.
4. FOUNDATION REBAR CAGES MAY BE WELDED IF THE REBAR CONFORMS TO ASTM A706/A706M AND ALL WELDING CONFORMS TO ANSI/AWS D1.4 (STRUCTURAL WELDING CODE - REINFORCING STEEL).
5. CONCRETE FOUNDATIONS SHALL CURE FOR A MINIMUM OF 7 DAYS BEFORE ANY LOADING IS APPLIED.

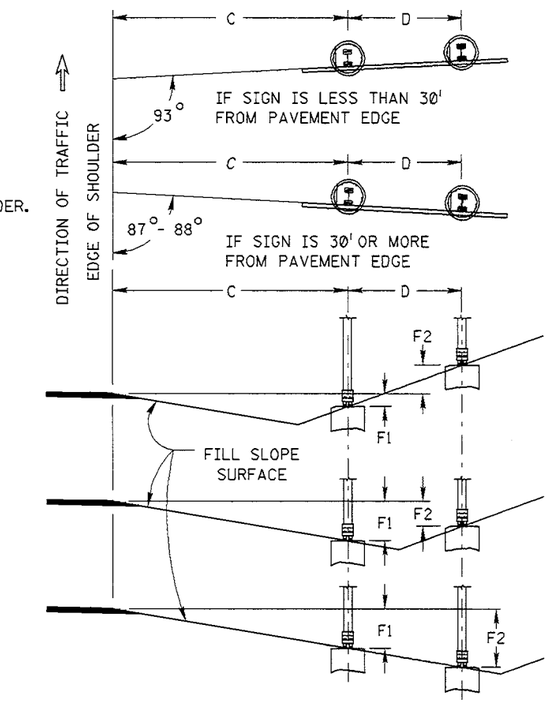

TYPICAL FOUNDATION LOCATION

REVISIONS												
NO.	DATE	BY	NO.	DATE	BY	NO.	DATE	BY	NO.	DATE	BY
1	04-94	HEB									
2	08-96	HEB									
3	07-98	HEB									
4	12-99	HEB									

SCALES SHOWN ARE FOR 11" x 17" PRINTS ONLY

CADD FILE NAME 18c21299.std

DRAWING DATE: APRIL, 1992

IDAHO TRANSPORTATION DEPARTMENT

BOISE, IDAHO

ASSISTANT CHIEF ENGINEER (DEVELOPMENT)

CHIEF ENGINEER

STANDARD DRAWING

BREAKAWAY SIGN POST INSTALLATION TYPE A-8 & A-9

REQUIRES STD. DWG. I-8-C-1

STANDARD DRAWING NO.

I-8-C-2

SHEET 1 OF 1

PROFESSIONAL ENGINEER REGISTERED 9352 12/23/99 STATE OF IDAHO MICHAEL R. VILLNAVE

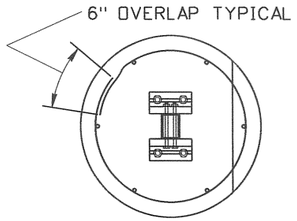

TYPICAL TOP VIEW

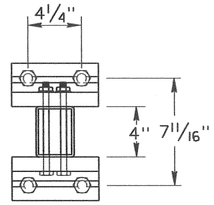

TOP VIEW POST AND BASE ASSEMBLY

B-2 POST
4" x 3" x 3/16"
RECTANGULAR TUBE
WEIGHT = 8.15 LB/FT

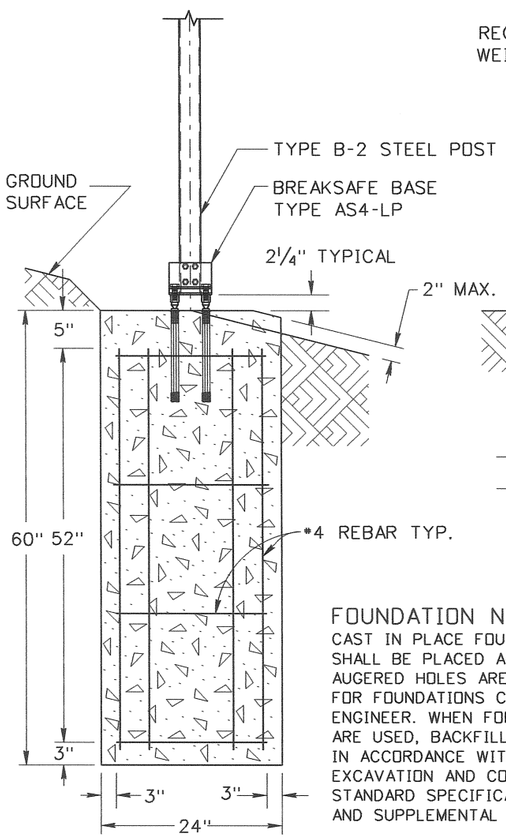

FRONT VIEW

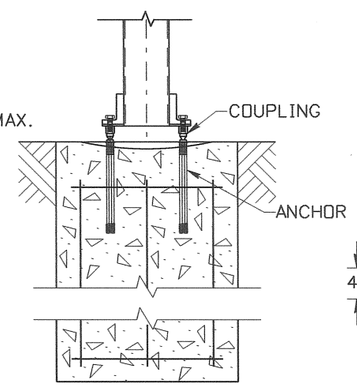

SIDE VIEW

FOUNDATION NOTE:

CAST IN PLACE FOUNDATIONS IN AUGERED HOLES SHALL BE PLACED AGAINST NATURAL SOIL. IF AUGERED HOLES ARE NOT POSSIBLE, EXCAVATION FOR FOUNDATIONS CAN BE DONE IF ALLOWED BY THE ENGINEER. WHEN FORMS (INCLUDING PAPER TUBES) ARE USED, BACKFILL SHALL BE PLACED AND COMPACTED IN ACCORDANCE WITH SECTION 210 - STRUCTURE EXCAVATION AND COMPACTING BACKFILL - OF THE IDAHO STANDARD SPECIFICATIONS FOR HIGHWAY CONSTRUCTION AND SUPPLEMENTAL SPECIFICATIONS.

MATERIAL QUANTITIES	
CONCRETE	0.6 CU. YDS.
6 VERT. RODS	26 LN. FT.
4 HOOPS	20.85 LN. FT.

TYPE A FOUNDATIONS

BREAKSAFE BASE ASSEMBLY TYPE AS4-LP

ITEM	DESCRIPTION	QTY. POST
① Bracket	Alum.	2
② Bolt	1/2"-13 UNC x 7-1/4" , Hex.Hd..	4
③ Lockwasher	1/2" galvanized	4
④ Nut	Hex 1/2" -13 UNC	4
⑤ Special Bolt	5/8"-11 UNC	4
⑥ Coupling	Small 5/8"-11 UNC Polyester Coated.	4
⑦ Shim	Horseshoe, 18 Gauge Galv.Steel Sheet	2
⑧ Shim	Horseshoe, 14 Gauge Galv.Steel Sheet	2
⑨ Anchor	Stainless Steel Ferrule, Steel Rod & Coil	4

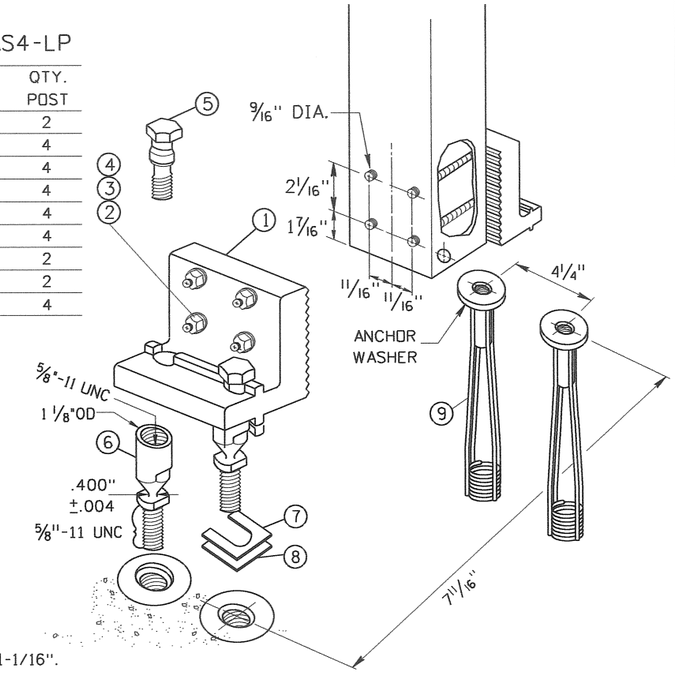

NOTES:

1. SEE SIGNING ERECTION SPECIFICATION SHEET FOR DIMENSIONS OF EACH SIGN INSTALLATION.
2. ANCHOR TEMPLATES SHOULD BE DESIGNED SO THE ANCHORS ARE HELD SOLID AND LEVEL.
3. NO PART OF THE FOUNDATION OR NON-BREAKAWAY PART OF THE BASE SHOULD PROTRUDE MORE THAN 2" ABOVE THE GROUND SURFACE.
4. FOUNDATION REBAR CAGES MAY BE WELDED IF THE REBAR CONFORMS TO ASTM A706/A706M AND ALL WELDING CONFORMS TO ANSI/AWS D1.4 (STRUCTURAL WELDING CODE - REINFORCING STEEL).
5. CONCRETE FOUNDATIONS SHALL CURE FOR A MINIMUM OF 7 DAYS BEFORE ANY LOADING IS APPLIED.

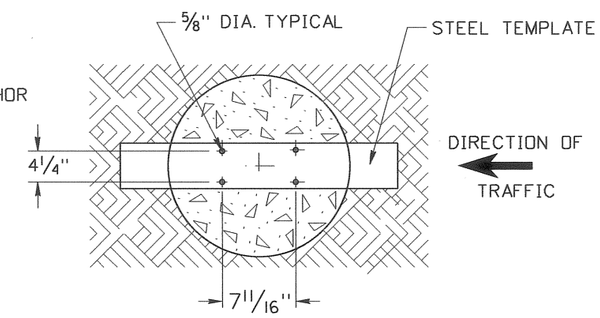

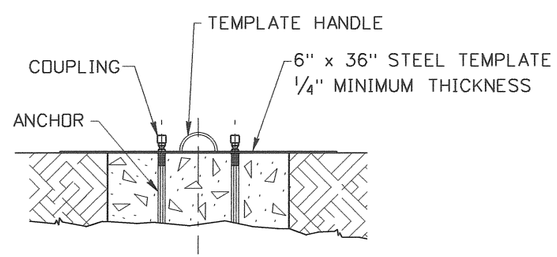

TYPICAL ANCHOR TEMPLATE FOR TYPE B-2 POST

INSTALLATION NOTES

WRENCH SIZES REQUIRED: 5/8", 7/8", 1-1/16".

BRACKET ASSEMBLY

ASSEMBLE BRACKETS TO POSTS WITH BOLTS PROVIDED. SQUARE AND TIGHTEN. (ITEMS ① ② ③ AND ④) MAKE AS TIGHT AS POSSIBLE WITH CONVENTIONAL WRENCHES.

ANCHOR ASSEMBLY

NOTE: PRECISE POSITIONING OF THE ANCHORS IS CRITICAL TO PROPER ASSEMBLY OF THE SYSTEM. IT IS RECOMMENDED THAT ACTUAL POSTS BE USED TO LOCATE THE CORRECT POSITION OF THE ANCHORS.
FABRICATE A FLAT, RIGID TEMPLATE WITH FOUR 5/8" HOLES LOCATED TO MATCH THE SPECIFIED ANCHOR PATTERN OF THE BRACKETS ATTACHED TO THE SIGN POST. SEE TYPICAL ANCHOR TEMPLATE DETAIL.
ATTACH FOUR TYPE A FEMALE ANCHORS ⑨ TO THE TEMPLATE USING FOUR 5/8" DIAMETER BOLTS. ENSURE THAT EACH ANCHOR WASHER IS SNUG AGAINST THE TEMPLATE.
LOWER ANCHOR ASSEMBLY INTO FRESH CONCRETE FOUNDATION AND VIBRATE INTO POSITION SUCH THAT THE TOPS OF THE ANCHOR WASHERS ARE FLUSH WITH THE FINISHED TOP SURFACE OF THE FOUNDATION.
SUPPORT THE TEMPLATE SUCH THAT ALL ANCHORS ARE LEVEL AND IN THEIR PROPER POSITION.
ALLOW CONCRETE TO CURE AND THEN REMOVE THE BOLTS AND TEMPLATE FROM THE TOP OF THE FOUNDATION.

COUPLING ASSEMBLY

THREAD FOUR COUPLINGS ⑥ INTO ANCHORS ⑨. DO NOT TIGHTEN
SUSPEND POST OVER FOOTING AND INSERT SPECIAL BOLTS ⑤ THROUGH BRACKETS ① AND THEN THREAD SPECIAL BOLTS ⑤ AND HAND TIGHTEN INTO THE COUPLINGS ⑥.
TIGHTEN COUPLINGS ⑥ DOWN INTO ANCHORS ⑨.

TIGHTEN.

TIGHTEN SPECIAL BOLTS ⑤ WITH 1-1/16" WRENCH. NOTE! DO NOT PLACE TORQUE ACROSS NECKED DOWN PORTION OF COUPLING - WRENCH FLATS ARE PROVIDED ON EITHER SIDE FOR PROPER TIGHTENING. MAKE AS TIGHT AS POSSIBLE WITH CONVENTIONAL WRENCHES.
IF POST IS NOT PLUMB, INSERT SHIMS ⑦ AND ⑧ BETWEEN COUPLINGS ⑥ AND ANCHORS ⑨.
INSERT NO MORE THAN TWO SHIMS UNDERNEATH ANY ONE COUPLING AND NO MORE THAN THREE SHIMS UNDERNEATH ANY TWO COUPLINGS.

REVISIONS								
NO.	DATE	BY	NO.	DATE	BY	NO.	DATE	BY
1	04-94	HEB						
2	08-96	HEB						
3	07-98	HEB						
4	12-99	HEB						
5	07-10	HEB						

SCALES SHOWN ARE FOR 11" X 17" PRINTS ONLY

CADD FILE NAME: i8d10710.std

DRAWING DATE: MAY, 2010

IDAHO TRANSPORTATION DEPARTMENT

BOISE IDAHO

ASSISTANT CHIEF ENGINEER (DEVELOPMENT)

CHIEF ENGINEER

STANDARD DRAWING

BREAKAWAY SIGN POST INSTALLATION TYPE B-2

REQUIRES STD. DWG. I-8-D-3

English

STANDARD DRAWING NO. I-8-D-1

SHEET 1 OF 1

PROFESSIONAL ENGINEER REGISTERED 6260 7/12/10 STATE OF IDAHO CARL D. MAIN

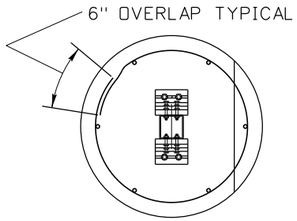

TYPICAL TOP VIEW

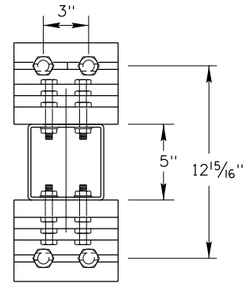

B-3 POST
5" x 5" x 3/16"
SQUARE TUBE
WEIGHT = 11.96 LB/FT

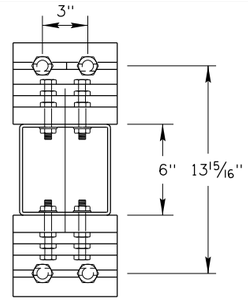

B-4 POST
6" x 6" x 3/16"
SQUARE TUBE
WEIGHT = 14.51 LB/FT

BREAKSAFE BASE ASSEMBLY TYPE B-525

ITEM		PARTS DESCRIPTION	QTY. POST
1	Bracket	Alum. (Bracket 1)	2
2	Bolt	Top, 1/2"-13 UNCx2-1/2", Hex.Hd.	4
3	Bolt	Middle, 1/2"-13 UNCx2-3/4", Hex.Hd.	4
4	Bolt	Bottom, 1/2"-13 UNCx3", Hex.Hd.	4
5	Cap Screw	Bracket, 1/2"-13 UNCx1-1/4", Hex.Hd.	4
6	Lockwasher	1/2" Galvanized	16
7	Nut	Hex. 1/2"-13 UNC	12
8	Special Bolt	1-8 UNC.	4
9	Coupling	Large, 1-8 UNC, 2A & 2B	4
10	Shim	Horseshoe, 18 Gauge Galv.	2
11	Shim	Horseshoe, 14 Gauge Galv.	2
12	Anchor	1-8 UNC	4

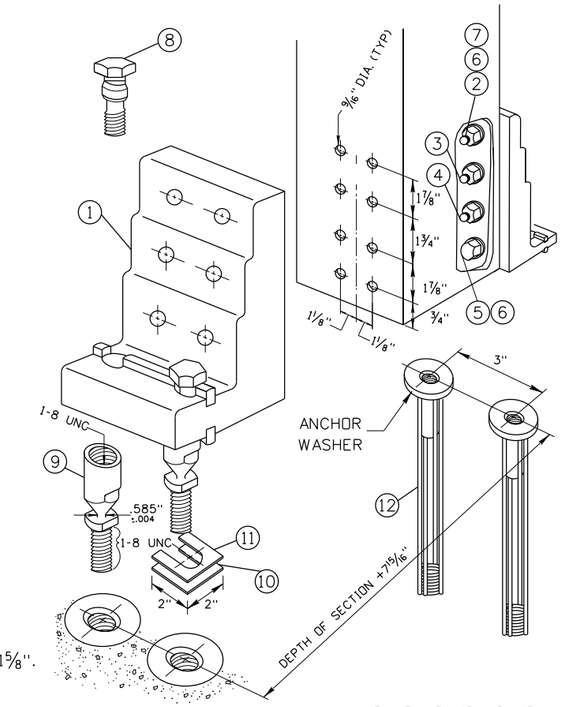

NOTES:

1. SEE SIGNING ERECTION SPECIFICATION SHEET FOR DIMENSIONS OF EACH SIGN INSTALLATION.
2. ANCHOR TEMPLATES SHOULD BE DESIGNED SO THE ANCHORS ARE HELD SOLID AND LEVEL.
3. NO PART OF THE FOUNDATION OR NON-BREAKAWAY PART OF THE BASE SHOULD PROTRUDE MORE THAN 2" ABOVE THE GROUND SURFACE.
4. FOUNDATION REBAR CAGES MAY BE WELDED IF THE REBAR CONFORMS TO ASTM A706/A706M AND ALL WELDING CONFORMS TO ANSI/AWS D1.4 (STRUCTURAL WELDING CODE - REINFORCING STEEL).
5. CONCRETE FOUNDATIONS SHALL CURE FOR A MINIMUM OF 7 DAYS BEFORE ANY LOADING IS APPLIED.

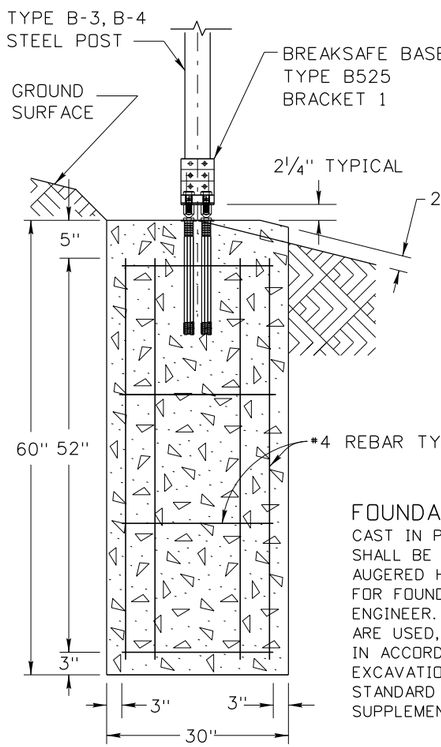

FRONT VIEW

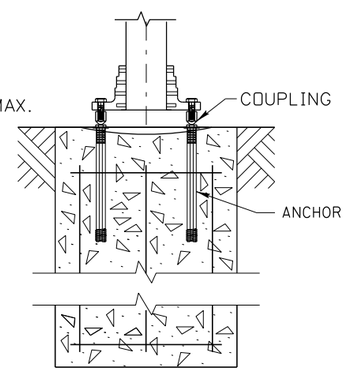

SIDE VIEW

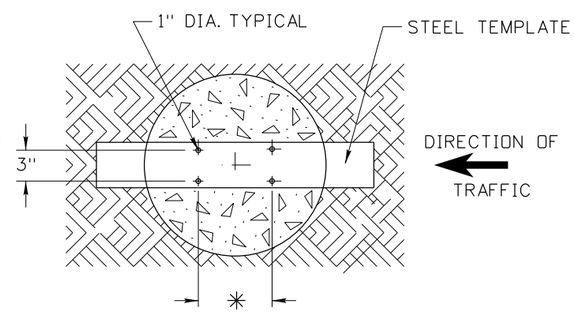

✳ B-3 POST = 12 15/16"
✳ B-4 POST = 13 15/16"

FOUNDATION NOTE:

CAST IN PLACE FOUNDATIONS IN AUGERED HOLES SHALL BE PLACED AGAINST NATURAL SOIL. IF AUGERED HOLES ARE NOT POSSIBLE, EXCAVATION FOR FOUNDATIONS CAN BE DONE IF ALLOWED BY THE ENGINEER. WHEN FORMS (INCLUDING PAPER TUBES) ARE USED, BACKFILL SHALL BE PLACED AND COMPACTED IN ACCORDANCE WITH SECTION 210 - STRUCTURE EXCAVATION AND COMPACTING BACKFILL - OF THE IDAHO STANDARD SPECIFICATIONS FOR HIGHWAY CONSTRUCTION SUPPLEMENTAL SPECIFICATIONS.

MATERIAL QUANTITIES	
CONCRETE	0.9 CU. YDS.
6 VERT. RODS	26 LN. FT.
4 HOOPS	27.13LN. FT.

TYPE A-1 FOUNDATIONS

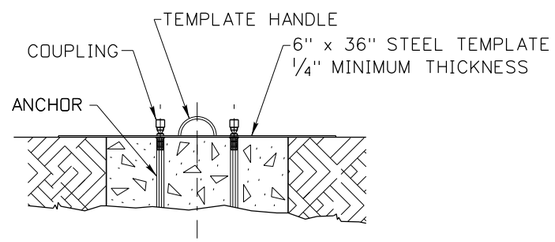

TYPICAL ANCHOR TEMPLATE
FOR TYPE B POSTS

INSTALLATION NOTES

WRENCH SIZES REQUIRED: 5/8", 7/8", 1 1/4", 1 7/16", 1 5/8".

BRACKET ASSEMBLY

ASSEMBLE BRACKETS TO POSTS WITH BOLTS PROVIDED, SQUARE AND TIGHTEN. (ITEMS 1 2 3 4 5 6 AND 7) MAKE AS TIGHT AS POSSIBLE WITH CONVENTIONAL WRENCHES.

ANCHOR ASSEMBLY

NOTE: PRECISE POSITIONING OF THE ANCHORS IS CRITICAL TO PROPER ASSEMBLY OF THE SYSTEM. IT IS RECOMMENDED THAT ACTUAL POSTS BE USED TO LOCATE THE CORRECT POSITION OF THE ANCHORS.
FABRICATE A FLAT, RIGID TEMPLATE WITH FOUR 1" HOLES LOCATED TO MATCH THE SPECIFIED ANCHOR PATTERN OF THE BRACKETS ATTACHED TO THE SIGN POST. SEE TYPICAL ANCHOR TEMPLATE DETAIL.
ATTACH FOUR TYPE B FEMALE ANCHORS 12 TO THE TEMPLATE USING FOUR 1" DIAMETER BOLTS. ENSURE THAT EACH ANCHOR WASHER IS SNUG AGAINST THE TEMPLATE.
LOWER ANCHOR ASSEMBLY INTO FRESH CONCRETE FOUNDATION AND VIBRATE INTO POSITION SUCH THAT THE TOPS OF THE ANCHOR WASHERS ARE FLUSH WITH THE FINISHED TOP SURFACE OF THE FOUNDATION.
SUPPORT THE TEMPLATE SUCH THAT ALL ANCHORS ARE LEVEL AND IN THEIR PROPER POSITION.
ALLOW CONCRETE TO CURE AND THEN REMOVE THE BOLTS AND TEMPLATE FROM THE TOP OF THE FOUNDATION.

COUPLING ASSEMBLY

THREAD FOUR COUPLINGS 9 INTO ANCHORS 12. DO NOT TIGHTEN
SUSPEND POST OVER FOOTING AND INSERT SPECIAL BOLTS 8 THROUGH BRACKETS 1 AND THEN THREAD SPECIAL BOLTS 8 AND HAND TIGHTEN INTO THE COUPLINGS 9.
TIGHTEN COUPLINGS 9 DOWN INTO ANCHORS 12.

TIGHTEN.

TIGHTEN SPECIAL BOLTS 8 WITH 1 5/8" WRENCH. **NOTE:** DO NOT PLACE TORQUE ACROSS NECKED DOWN PORTION OF COUPLING - WRENCH FLATS ARE PROVIDED ON EITHER SIDE FOR PROPER TIGHTENING. MAKE AS TIGHT AS POSSIBLE WITH CONVENTIONAL WRENCHES.
IF POST IS NOT PLUMB, INSERT SHIMS 10 AND 11 BETWEEN COUPLINGS 9 AND ANCHORS 12.
INSERT NO MORE THAN TWO SHIMS UNDERNEATH ANY ONE COUPLING AND NO MORE THAN THREE SHIMS UNDERNEATH ANY TWO COUPLINGS.

ORIGINAL STORED AT: ITD, Headquarters 3311 West State Boise, Idaho

ORIGINAL SIGNED BY: CARL D. MAIN
DATE ORIGINAL SIGNED: SEPTEMBER 27, 2011

REVISIONS								
NO.	DATE	BY	NO.	DATE	BY	NO.	DATE	BY
1	04-94	HEB	7	09-11	HEB			
2	08-96	HEB						
3	07-98	HEB						
4	12-99	HEB						
5	07-10	HEB						

SCALES SHOWN ARE FOR 11" X 17" PRINTS ONLY

CADD FILE NAME: i8d20911.std

DRAWING DATE: APRIL, 1992

IDAHO TRANSPORTATION DEPARTMENT

BOISE IDAHO

ORIGINAL SIGN BY: LOREN THOMAS
HIGHWAYS PROGRAM OVERSITE ENGINEER
ORIGINAL SIGN BY: TOM COLE
CHIEF ENGINEER

STANDARD DRAWING

BREAKAWAY SIGN POST INSTALLATION TYPE B-3 & B-4

REQUIRES STD. DWG. I-8-D-3

English

STANDARD DRAWING NO.
I-8-D-2

SHEET 1 OF 1

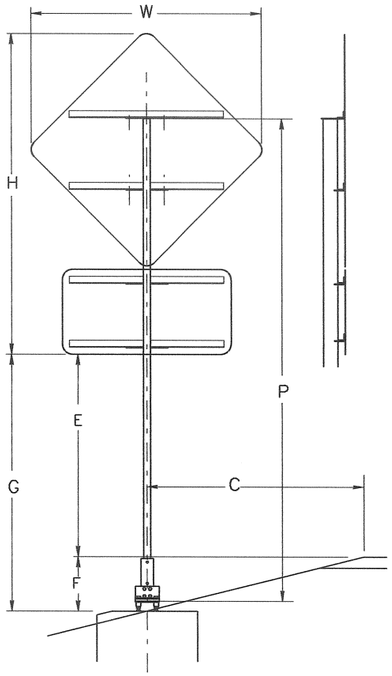

TYPICAL INSTALLATION OF
MULTIPLE SIGN FACES
REQUIRING BRACE ANGLES

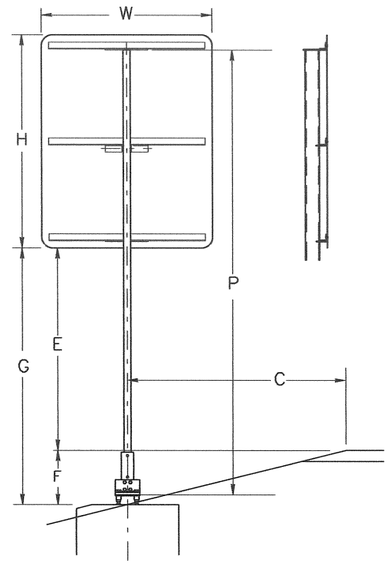

TYPICAL INSTALLATION OF SIGN FACE
REQUIRING BRACE ANGLES

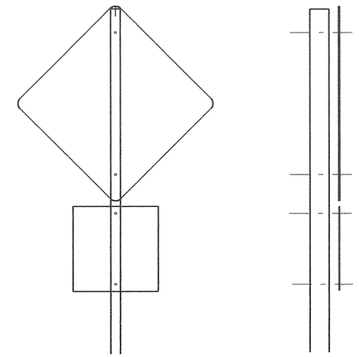

TYPICAL INSTALLATION OF SIGN FACES
NOT REQUIRING BRACE ANGLES

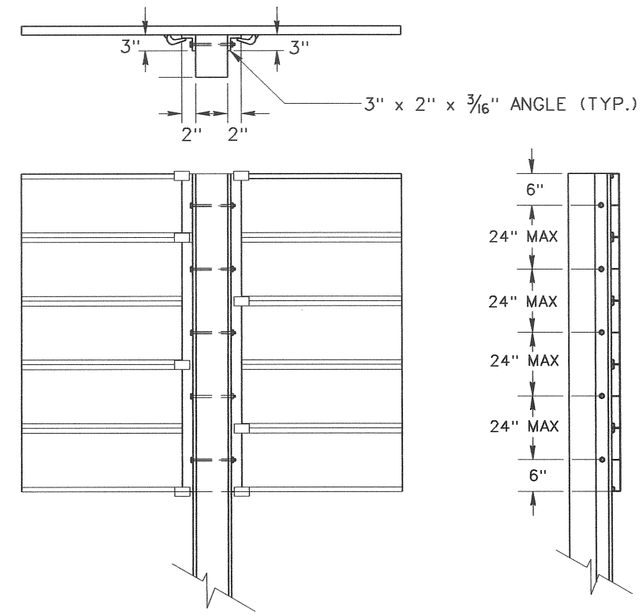

TYPICAL INSTALLATION
EXTRUDED ALUMINUM SIGN FACES

NOTE:

1. SEE SIGNING ERECTION SPECIFICATIONS FOR THE DIMENSIONS C, E, F, G, P, H, & W FOR EACH SIGN INSTALLATION.
2. C = THE DISTANCE FROM EDGE OF SHOULDER TO THE ℄ OF POST.
3. E = THE HEIGHT ABOVE THE EDGE OF FINISHED SHOULDER TO THE BOTTOM OF THE LOWER SIGN.
4. F = THE VERTICAL DISTANCE FROM THE TOP OF THE FOUNDATION TO THE EDGE OF SHOULDER ELEVATION.
5. G = THE DISTANCE FROM THE TOP OF THE FOUNDATION TO THE BOTTOM OF THE LOWER SIGN FACE.
6. P = THE TOTAL POST LENGTH.
7. H = THE OVERALL HEIGHT OF SIGN FACES.

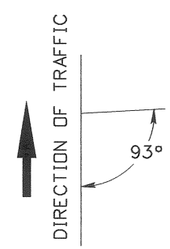

TYPICAL SIGN ORIENTATION

GENERAL NOTES

1. THE COST OF BOLTS, NUTS, WASHERS, AND ALUMINUM CLIP ASSEMBLIES NEEDED TO MOUNT THE REQUIRED SIGNS(S) ON THE POST SHALL BE INCLUDED IN THE BID ITEM(S) FOR "BREAKAWAY SIGN POST INSTALLATION TYPE B" AS SHOWN ON THE PLANS.
2. REFER TO STANDARD DRAWINGS I-9-A1, I-9A-2, I-9-B. AND I-9-C FOR DETAILS OF CLIPS AND BRACE ANGLES.
3. REFER TO STANDARD DRAWING I-10-A FOR INSTALLATION OF EXTRUDED ALUMINUM SIGN PANELS.
4. SIGN FACES 30 INCHES OR LESS IN WIDTH DO NOT REQUIRE BRACE ANGLES.
5. SIGN FACES 36 INCHES OR OVER IN WIDTH SHALL HAVE BRACE ANGLES.
6. REFER TO STANDARD DRAWING I-12-F "PUNCHING SCHEDULE FOR TYPE B AND E SIGNS" FOR DETAILS OF HOLE SPACING.
7. THE DISTANCE "G" SHOULD NOT BE LESS THAN 7 FEET AND THE LENGTH "P" SHOULD NOT BE LESS THAN 9 FEET WHEN SIGNS MUST BE INSTALLED WITHIN 30' OF THE TRAVEL LANE.

REVISIONS

NO.	DATE	BY	NO.	DATE	BY	NO.	DATE	BY
1	04-94	HEB						
2	08-96	HEB						
3	02-98	HEB						
4	12-99	HEB						
5	07-10	HEB						

SCALES SHOWN ARE FOR 11" X 17" PRINTS ONLY

CADD FILE NAME: i8d30710.std

DRAWING DATE: APRIL, 1992

IDAHO TRANSPORTATION DEPARTMENT

BOISE IDAHO

ASSISTANT CHIEF ENGINEER (DEVELOPMENT)

CHIEF ENGINEER

STANDARD DRAWING

BREAKAWAY SIGN POST INSTALLATION TYPE B-2, B-3, B-4

REQUIRES STD. DWG. I-8-D-1 OR I-8-D-2

English

STANDARD DRAWING NO.

I-8-D-3

SHEET 1 OF 1

PROFESSIONAL ENGINEER REGISTERED 6260 7/12/10 STATE OF IDAHO CARL D. MAIN

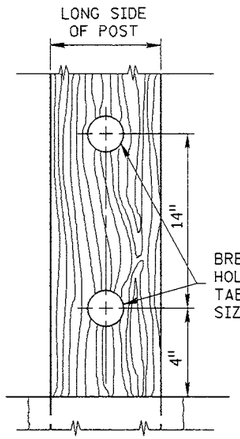

DETAIL "A"

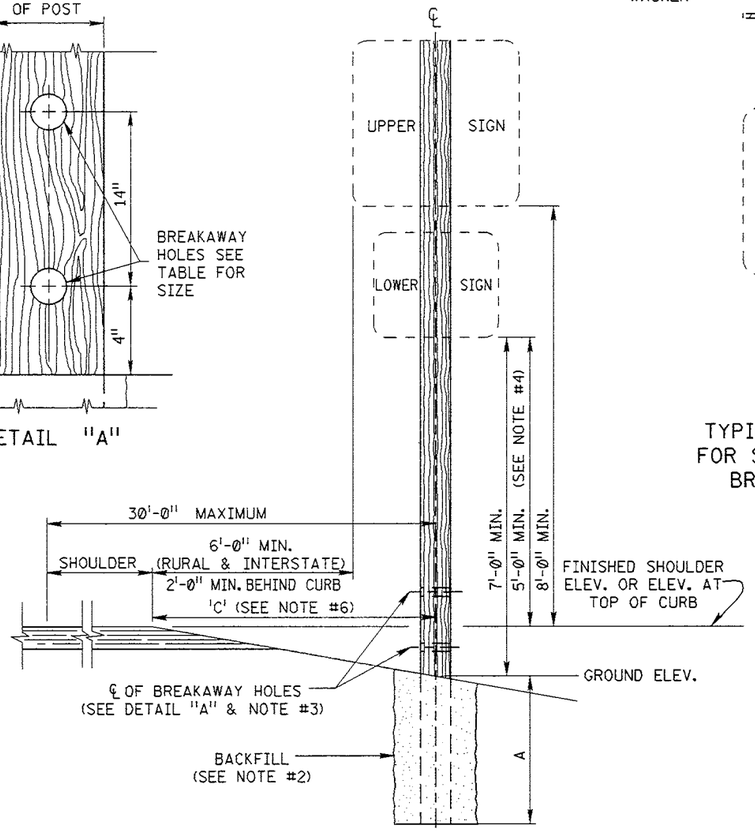

INSTALLATION DETAIL

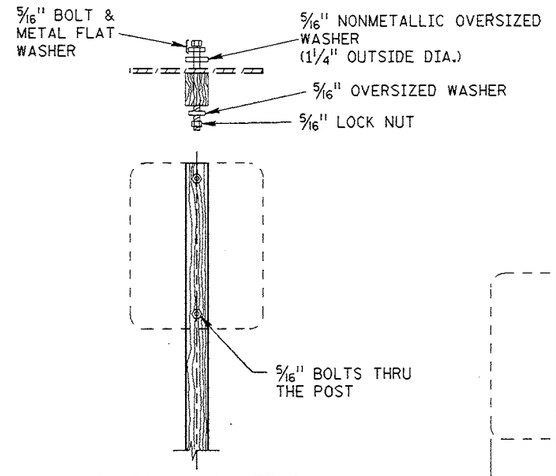

TYPICAL MOUNTING FOR SIGNS WITHOUT BRACE ANGLES

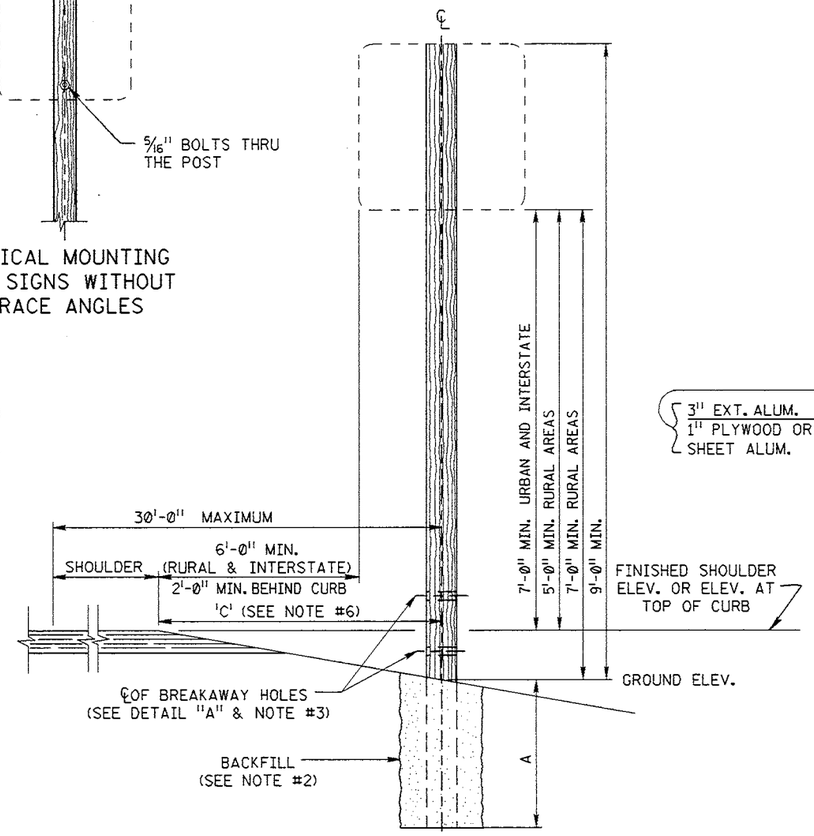

INSTALLATION DETAIL

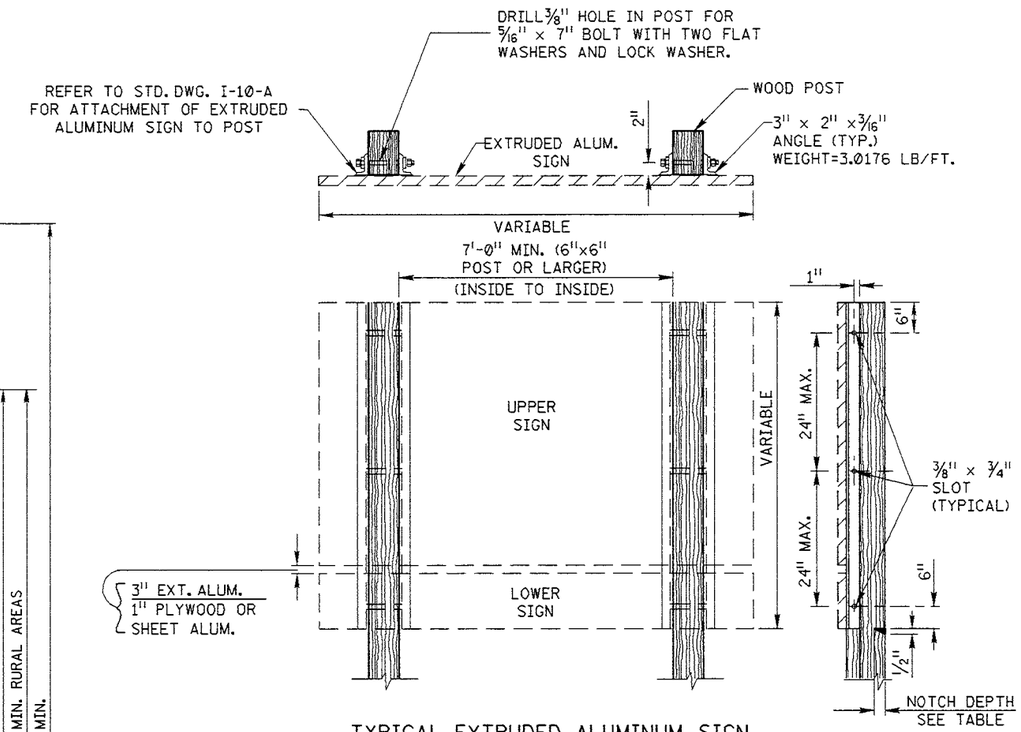

TYPICAL EXTRUDED ALUMINUM SIGN MOUNTED ON WOOD POSTS

ANGLES ARE REQUIRED FOR MOUNTING EXTRUDED ALUMINUM PANEL SIGNS. PLYWOOD AND SHEET ALUMINUM SIGNS DO NOT REQUIRE THE ANGLES.

Post Type	Post Size	Embedment Depth A	Notch Depth	Breakaway Hole Size
D-1	4"x4"	3'-6"	——	————
D-2	4"x6"	4'-0"	1 3/4"	1 1/2" DIA.
D-3	6"x6"	5'-0"	1 3/4"	2" DIA.
D-4	6"x8"	6'-0"	2 1/2"	3" DIA.

NOTE: 7'-0" MIN. CLEAR DISTANCE BETWEEN 6"x6" POSTS OR LARGER.
FULL WIDTH SAW CUT NOTCHES ARE REQUIRED ON ALL TWO POST INSTALLATIONS.
OMIT NOTCH FOR SINGLE POST INSTALLATIONS.

NOTES:

1. PLACE LONG DIMENSION OF POST CROSS SECTION PERPENDICULAR TO THE SIGN FACE.
2. BACKFILL SHALL BE APPROVED GRANULAR BORROW.
3. BREAKAWAY HOLES SHALL BE FIELD DRILLED. POSTS 4"x6" and LARGER REQUIRE BREAKAWAY HOLES. THE BREAKAWAY HOLES SHALL BE DRILLED PARALLEL TO THE SIGN FACE.
4. IF THE LOWER SIGN IS AN OBJECT MARKER, THE DIMENSION SHALL BE 4'-0".
5. POSTS SHALL BE PRESSURE TREATED ACCORDING TO SECTION 710.09.
6. SEE SIGN ERECTION SHEET IN PLANS FOR 'C' DIMENSION.

REVISIONS											
NO.	DATE	BY	NO.	DATE	BY	NO.	DATE	BY	NO.	DATE	BY
1	08-96	HEB									

SCALES SHOWN ARE FOR 22" X 34" PRINTS ONLY

CADD FILE NAME 18e_0896.std

DRAWING DATE: NOVEMBER, 1991

IDAHO TRANSPORTATION DEPARTMENT

BOISE, IDAHO

CHIEF OF HIGHWAY OPERATIONS

CHIEF ENGINEER

STANDARD DRAWING

BREAKAWAY SIGN POSTS TYPE D

STANDARD DRAWING NO. I-8-E

SHEET 1 OF 1

PROFESSIONAL ENGINEER REGISTERED Gary C. Sanderson 6265 8-23-96 STATE OF IDAHO GARY C. SANDERSON

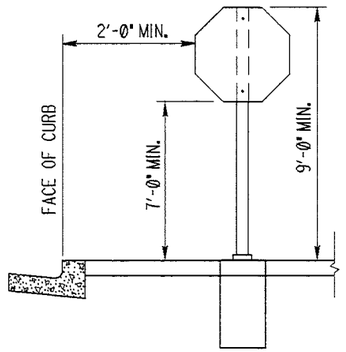

URBAN LOCATIONS
WITH CURB AND GUTTER

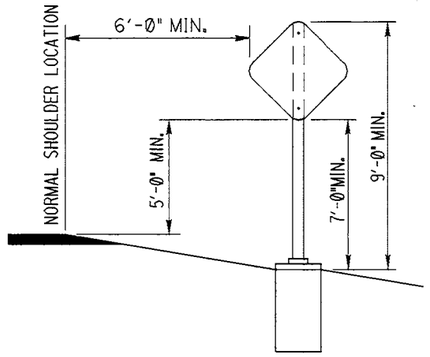

RURAL LOCATIONS
(SEE NOTE 4 WHEN SOLID ROCK IS ENCOUNTERED)

TYPICAL INSTALLATION FOR SIGNS

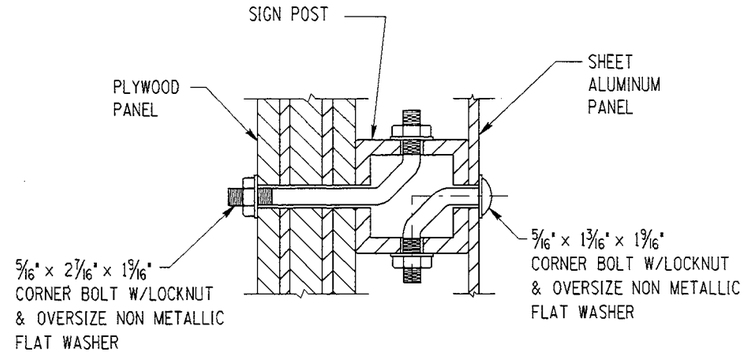

CORNER BOLTS MAY BE USED WITH BACK TO BACK INSTALLATIONS

BACK TO BACK SIGN MOUNTING DETAILS

NOTES

1. SIGN POST ANCHORS SHALL NOT BE PERFORATED EXCEPT FOR ONE 7/16" ROUND HOLE ON ALL FOUR SIDES AT THE UPPER END OF THE SECTIONS.
2. BOTTOM OF ANCHOR POST SHALL BE KEPT OPEN SO MOISTURE CAN DRAIN INTO GROUND.
3. TYPE E-1 AND E-2 SIGN POSTS ARE INTENDED FOR SINGLE POST INSTALLATIONS ONLY.
4. IF SOLID ROCK IS ENCOUNTERED, A HOLE MAY BE DRILLED TO A MINIMUM DEPTH AS SPECIFIED BELOW, THEN THE SIGN POST ANCHOR AND ANCHOR SLEEVE SHALL BE GROUTED IN.

	MIN. DEPTH
TYPE E-1	1'-6"
TYPE E-2	2'-0"

5. TYPE E-1 POST ANCHOR SLEEVES SHALL BE INSTALLED SO THAT THE HOLES WILL ALIGN AND THE TOP BE FLUSH WITH THE SIGN POST ANCHOR.
6. ALL INSTALLATIONS SHALL HAVE 8" SQUARE CONCRETE FOUNDATIONS OR BE GROUTED INTO SOLID ROCK.

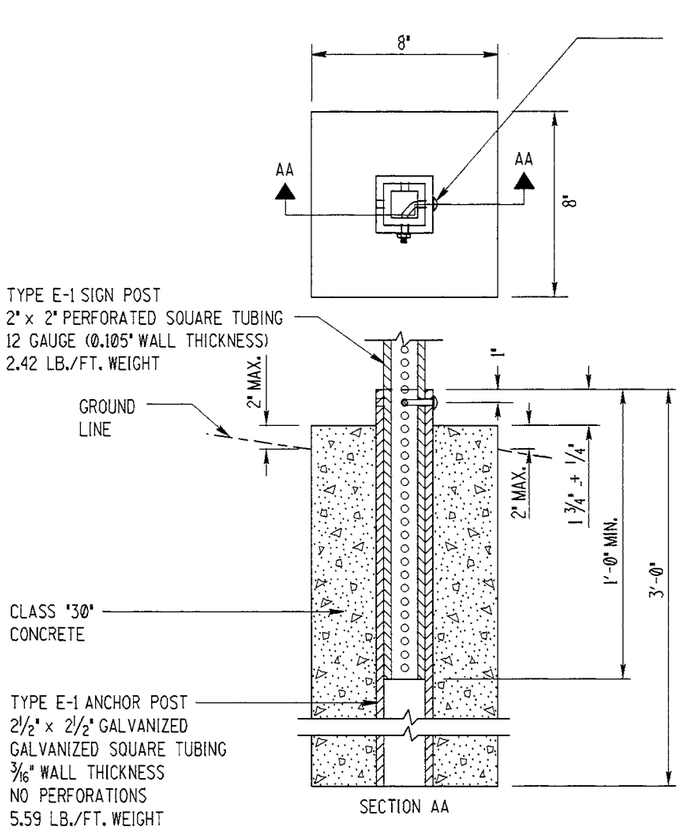

SECTION AA

TYPE E-1
SIGN POST INSTALLATION DETAILS
WITH ONE PIECE ANCHOR POST

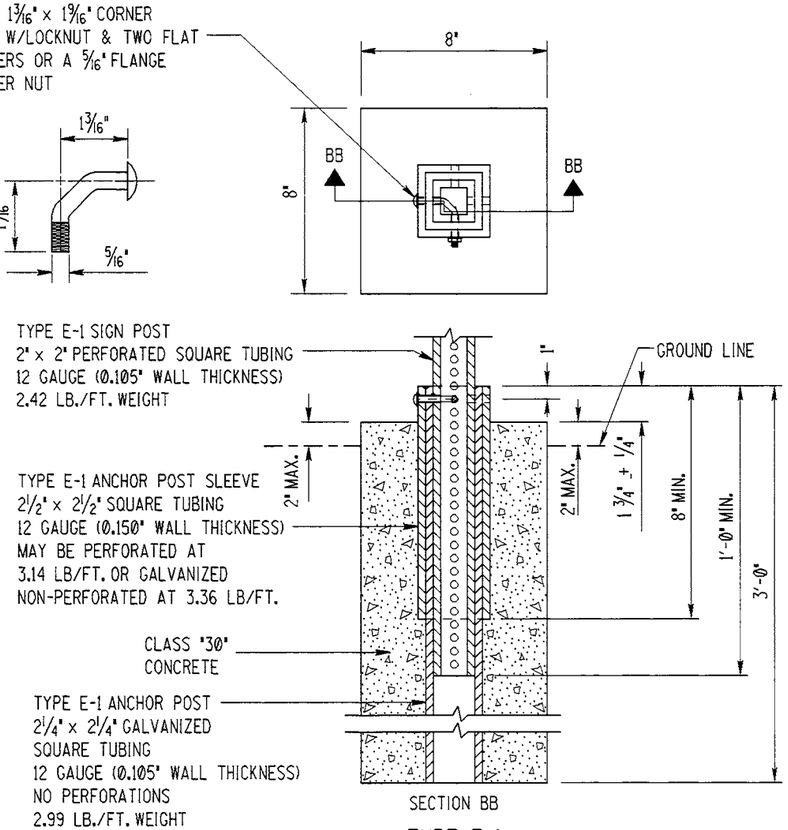

SECTION BB

TYPE E-1
SIGN POST INSTALLATION DETAILS
WITH TWO PIECE ANCHOR POST

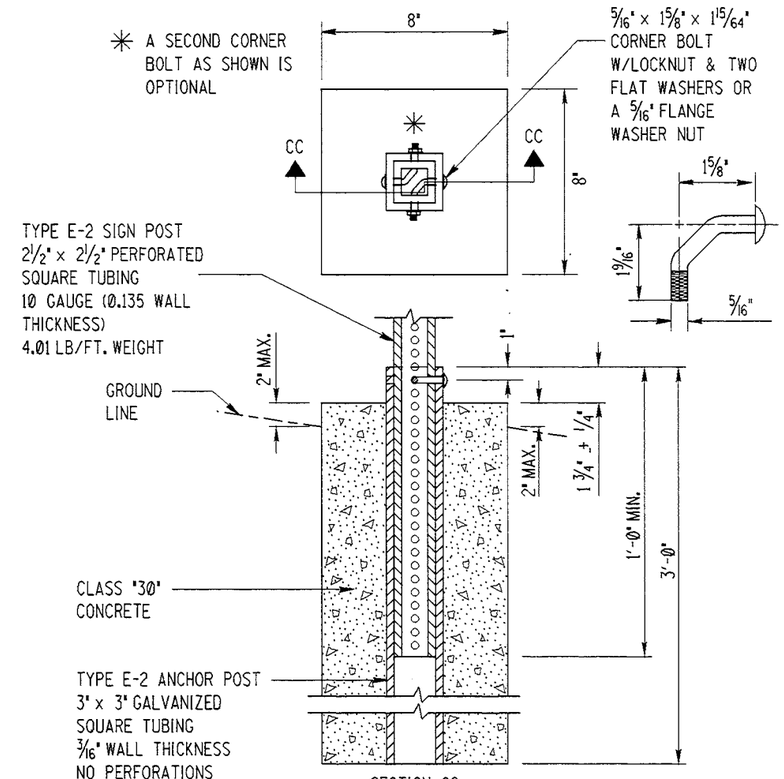

SECTION CC

TYPE E-2
SIGN POST INSTALLATION DETAILS

REVISIONS												
NO.	DATE	BY	NO.	DATE	BY	NO.	DATE	BY	NO.	DATE	BY
1	02-92	JEC									
2	12-94	HEB									
3	06-99	HEB									
4	12-01	NOB									

SCALES SHOWN ARE FOR 17" X 11" PRINTS ONLY

CADD FILE NAME: 18F_1201.std

DRAWING ORIG. DATE: JULY, 1990

IDAHO TRANSPORTATION DEPARTMENT

BOISE, IDAHO

ASSISTANT CHIEF ENGINEER (DEVELOPMENT)

CHIEF ENGINEER

STANDARD DRAWING

BREAKAWAY SIGN POSTS TYPE E

FORM CATALOG NUMBER

STANDARD DRAWING NO.

I-8-F

SHEET 1 OF 1

PROFESSIONAL ENGINEER REGISTERED 10810 12-14-01 STATE OF IDAHO LANCE Z. JOHNSON

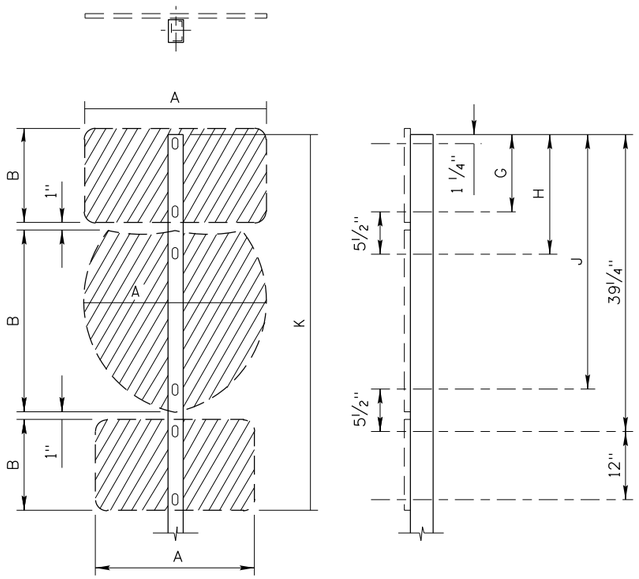

4" x 3" POST SIGN MOUNTING SPACING

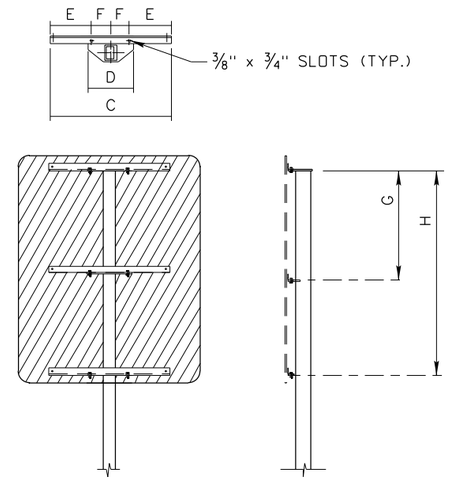

TYPICAL OF SIGN MOUNTS
4" x 3", 5" x 5", 6" x 6" POSTS

BRACE ANGLE SPECIFICATIONS FOR 4" X 3", 5" X 5", 6" X 6" POSTS									
SIGN DESCRIPTION	SIGN SIZE A	SIGN SIZE B	C	D	E	F	G	H	WEIGHT IN LBS.
STOP	36"	36"	32"	12"	11"	5"	30"	—	14.80
	48"	48"	42"	12"	16"	5"	20"	—	19.40
YIELD	60" TRIANGLE		48"	12"	19"	5"	—	—	13.90
			12"	12"	1"	5"	35"		
SQUARE AND RECTANGULAR SIGNS	36"	48"	32"	12"	11"	5"	42"	—	14.80
	48"	60"	32"	12"	11"	5"	27"	54"	22.20
	36"	36"	32"	12"	11"	5"	30"	—	14.80
	48"	48"	44"	12"	17"	5"	42"	—	22.30
	48"	36"	32"	12"	11"	5"	30"	—	14.80
	72"	36"	62"	12"	26"	5"	18"	—	28.60
	72"	48"	62"	12"	26"	5"	30"	—	28.60
	48"	30"	32"	12"	11"	5"	24"	—	14.80
	72"	30"	62"	12"	26"	5"	24"	—	28.60
	36"	24"	32"	12"	11"	5"	18"	—	14.80
	36"	30"	32"	12"	11"	5"	24"	—	14.80
WARNING & AUXL. SIGNS	36" DIAMOND		26"	12"	8"	5"	16"	—	12.00
	18"	18"	*	*	*	*	*		
	48" DIAMOND		42"	12"	16"	5"	20"	—	19.40
	24"	24"	*	*	*	*	*		
WARNING	36" DIAMOND		26"	12"	8"	5"	16"	—	12.00
	48" DIAMOND		42"	12"	16"	5"	20"	—	19.40
WARNING LARGE ARROW	48"	24"	38"	12"	14"	5"	18"	—	17.50
	60"	36"	44"	12"	17"	5"	30"	—	20.40
JUNCTION ASSEMBLY	21"	15"	*	*	*	*	POST TOP CLIP NOT REQ'D-COVER R ONLY		
	2-24"RT.MARK.		27"	12"	8 1/2"	5"	20"	38"	12.50
SINGLE CARDINAL DIRECT'L ASSY.	30"	15"	26"	12"	8"	5"	—	—	15.20
	36"	36"	26"	12"	8"	5"	13 1/2"	—	
			12"	12"	1"	5"	—	38 1/2"	
JUNCTION ASSEMBLY	21"	15"	*	*	*	*	POST TOP CLIP NOT REQ'D-COVER R ONLY		
	3-24"RT.MARK.		54"	12"	21"	5"	20"	38"	25.00

NOTES:
1. WEIGHTS OF BRACE ANGLES DO NOT INCLUDE GALVANIZING.
2. ALL BRACE ANGLES SHALL BE 1 3/4" x 1 3/4" x 1/4" AT 2.77 LBS./FT.
* 3. THE AUXILIARY SIGNS SHALL BE ATTACHED BY DRILLING THE POST WITH TWO HOLES AND FLUSH MOUNT THE SIGN TO THE FACE OF THE POST.
4. REFER TO STANDARD DRAWINGS I-8-D-1, I-8-D-2 & I-8-D-3.

SLOT SPACING SPECS. FOR 4"x3" POSTS						
SIGN DESCRIPTION	SIGN SIZE A	SIGN SIZE B	G	H	J	K
STOP	30"	30"	25 1/4"	—	—	28 1/4"
	36"	36"	31 1/4"	—	—	34 1/4"
YIELD	36"TRIANGLE		25 1/4"	—	—	30 1/4"
SQUARE AND RECTANGULAR SIGNS	12"	30"	25 1/4"	—	—	28 1/4"
	24"/36"	18"	—	—	—	
	24"/30"	24"	19 1/4"	—	—	22 1/4"
	24"	30"	25 1/4"	—	—	28 1/4"
	30"	30"	25 1/4"	—	—	28 1/4"
	30"	36"	31 1/4"	—	—	34 1/4"
	36"	24"	19 1/4"	—	—	22 1/4"
	36"	30"	25 1/4"	—	—	28 1/4"
WARNING	18" DIAMOND		21 1/4"	—	—	23 1/2"
	30" DIAMOND		31 1/4"	—	—	37 1/4"
WARNING & AUXL. SIGNS	30" DIAMOND		31 1/4"	—	—	56 1/4"
	18"	18"	—	39 3/4"	54 3/4"	
NO PASS. ZONE	36"x48"x48"		19 1/4"	—	—	21 1/2"
TRAIL BLAZER ASSEMBLY	24"	12"	10 1/4"	—	—	52 3/4"
	24"	24"	—	15 3/4"	33 3/4"	
	21"	15"	—	—	—	
ADV. ROUTE MARKER ASSY.	24"	24"	19 1/4"	—	—	38 1/4"
	24"	15"	—	24 3/4"	36 3/4"	
SINGLE JCT. ASSY.	21"	15"	13 1/4"	—	—	39 3/4"
	24"	24"	—	18 3/4"	36 3/4"	
HOSPITAL, CAMPING ASSY.	24"	24"	19 1/4"	—	—	29 1/4"
	24"	6"	—	24 3/4"	27 3/4"	

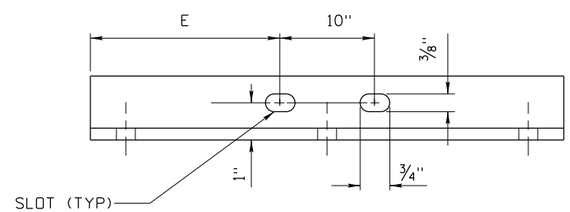

NOTE:
CENTER HOLES IN THE BRACE ANGLES ARE REQUIRED ONLY FOR THOSE SIGNS WHERE "A" > 72".

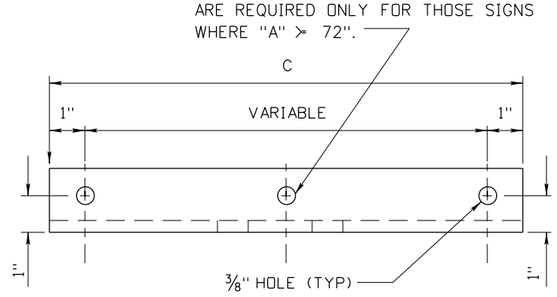

BRACE ANGLE DETAIL

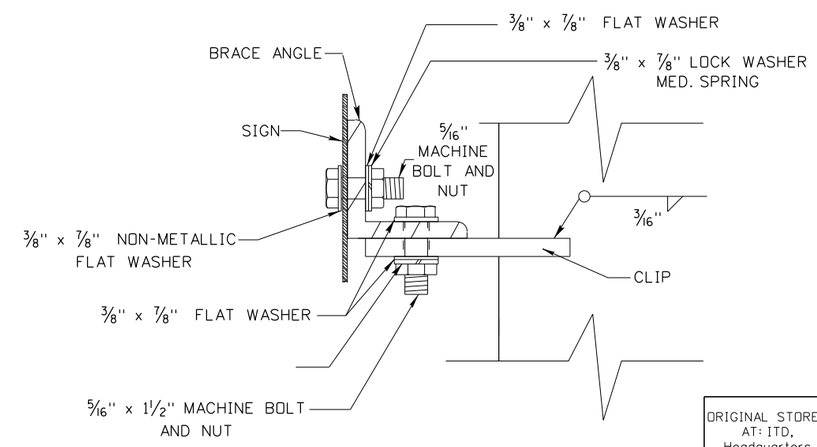

BRACE ANGLE ATTACHMENT DETAIL

ORIGINAL STORED AT: ITD, Headquarters 3311 West State Boise, Idaho

ORIGINAL SIGNED BY: CARL D. MAIN
DATE ORIGINAL SIGNED: SEPTEMBER 27, 2011

REVISIONS								
NO.	DATE	BY	NO.	DATE	BY	NO.	DATE	BY
1	08-96	HEB						
2	12-01	NQB						
3	12-07	HEB						
4	07-10	HEB						
5	09-11	HEB						

SCALES SHOWN ARE FOR 11" X 17" PRINTS ONLY

CADD FILE NAME: i9a10911.std

DRAWING DATE: DECEMBER, 2007

IDAHO TRANSPORTATION DEPARTMENT

BOISE IDAHO

ORIGINAL SIGN BY: LOREN THOMAS
HIGHWAYS PROGRAM OVERSITE ENGINEER
ORIGINAL SIGN BY: TOM COLE
CHIEF ENGINEER

STANDARD DRAWING

B POST AND BRACE ANGLE DETAIL

REQUIRES STD. DWG. I-9-A-2

English

STANDARD DRAWING NO.

I-9-A-1

SHEET 1 OF 1

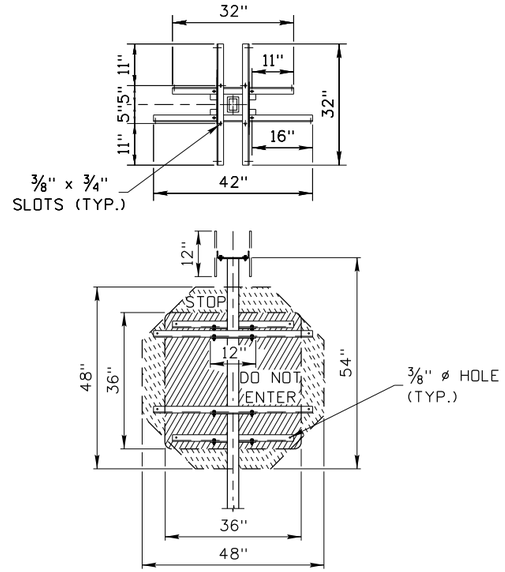

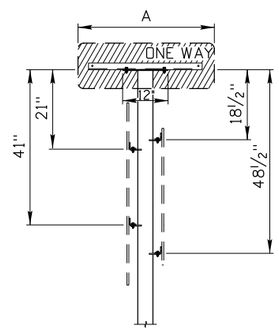

WEIGHT OF BRACE ANGLES = 48.92 lbs.

RAMP TERMINAL
ASSEMBLY "A"

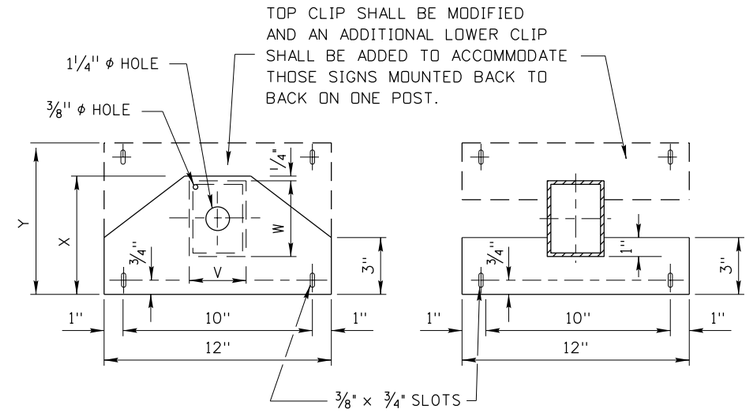

B-2 POST TOP CLIP DETAIL
TOP VIEW

B-2 POST LOWER CLIP DETAIL
SECTION AA

Post Type	Post		Top Clip	
	V	W	X	Y
B-2	3"	4"	6 1/4"	8"

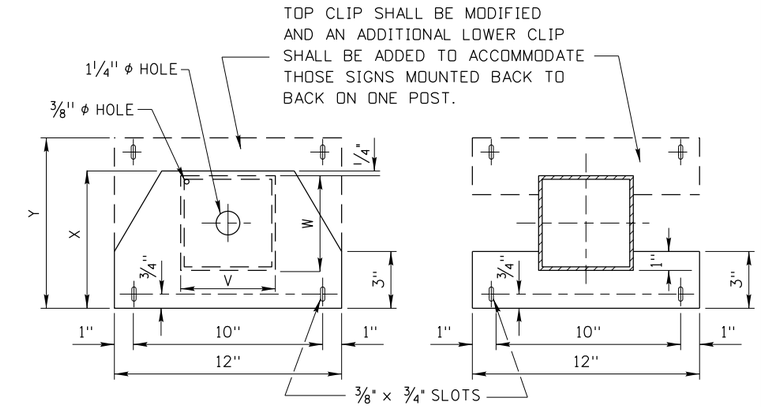

B-3 & B-4 POST TOP CLIP DETAIL
TOP VIEW

B-3 & B-4 POST LOWER CLIP DETAIL
SECTION AA

Post Type	Post		Top Clip	
	V	W	X	Y
B-3	5"	5"	7 1/4"	9"
B-4	6"	6"	8 1/4"	10"

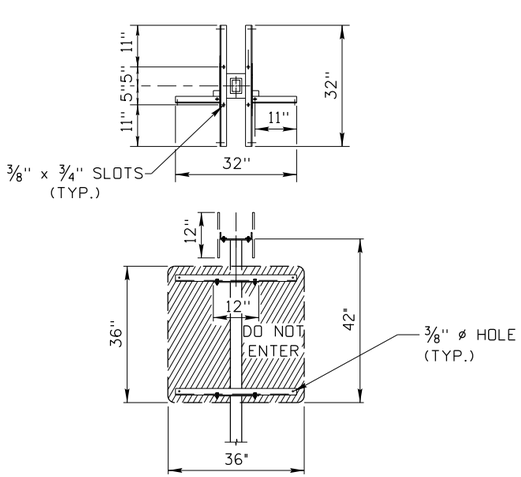

WEIGHT OF BRACE ANGLES = 29.56 lbs.

RAMP TERMINAL
ASSEMBLY "B"

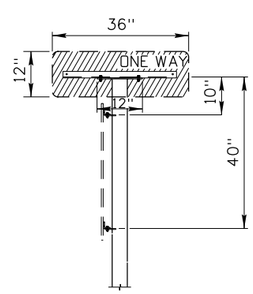

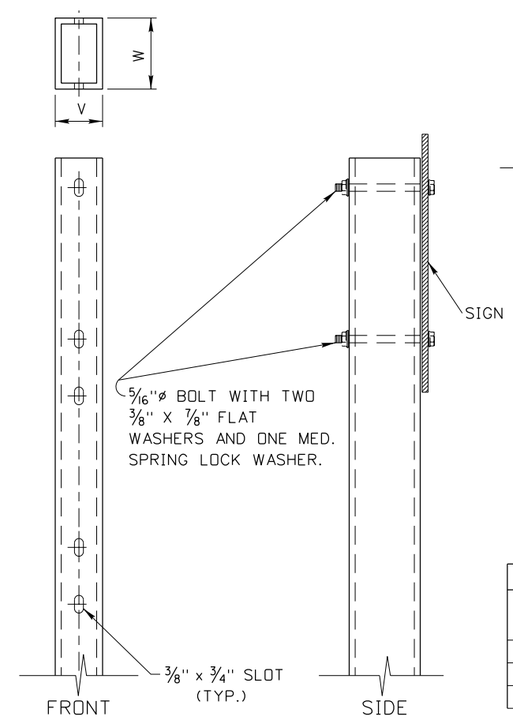

TYPE B-2 POST

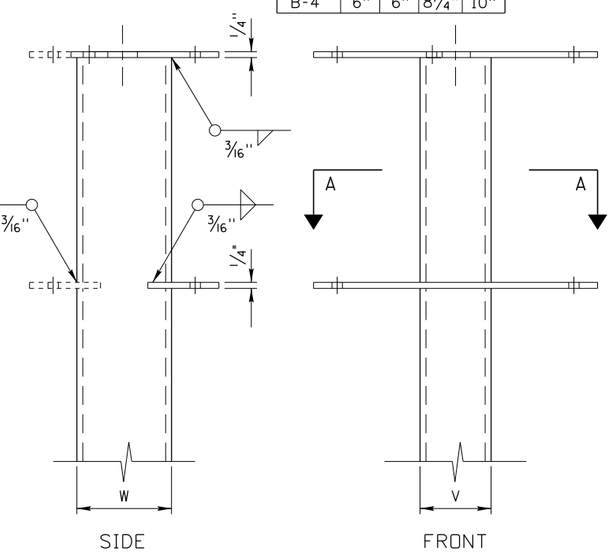

TYPE B-2, B-3, B-4 POSTS

WEIGHT SCHEDULE			
Post Type	Wt. in Lbs. for lower clip - ea.	Weight. in Lbs. for top clip each	Weight modified top clip-ea.
B-2	2.55	5.32	6.82
B-3	2.55	6.18	7.67
B-4	2.55	7.03	8.52

WEIGHTS DO NOT INCLUDE GALVANIZING

NOTES:
1. REFER TO STANDARD DRAWINGS I-8-D-1, I-8-D-2 & I-8-D-3.
2. POST WEIGHTS SHALL INCLUDE THE WEIGHT OF THE CLIPS.

ORIGINAL STORED AT: ITD, Headquarters 3311 West State Boise, Idaho

ORIGINAL SIGNED BY: CARL D. MAIN
DATE ORIGINAL SIGNED: SEPTEMBER 27, 2011

REVISIONS								
NO.	DATE	BY	NO.	DATE	BY	NO.	DATE	BY
1	08-96	HEB	6	09-11	HEB			
2	02-98	HEB						
3	12-01	NQB						
4	12-07	HEB						
5	07-10	HEB						

SCALES SHOWN ARE FOR 11" X 17" PRINTS ONLY

CADD FILE NAME: i9a20911.std

DRAWING DATE: DECEMBER, 2007

IDAHO TRANSPORTATION DEPARTMENT

BOISE IDAHO

ORIGINAL SIGN BY: LOREN THOMAS
HIGHWAYS PROGRAM OVERSITE ENGINEER
ORIGINAL SIGN BY: TOM COLE
CHIEF ENGINEER

STANDARD DRAWING

B POST AND BRACE ANGLE DETAIL

REQUIRES STD. DWG. I-9-A-1

English

STANDARD DRAWING NO.
I-9-A-2

SHEET 1 OF 1

TOP VIEW

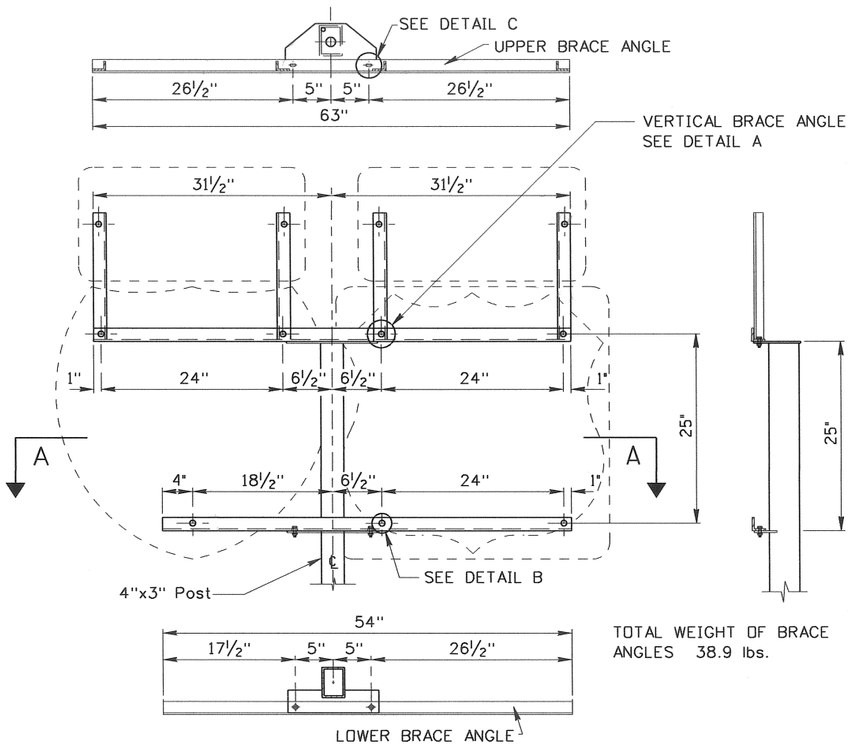

TOTAL WEIGHT OF BRACE ANGLES 38.9 lbs.

SEC. AA

TOP VIEW

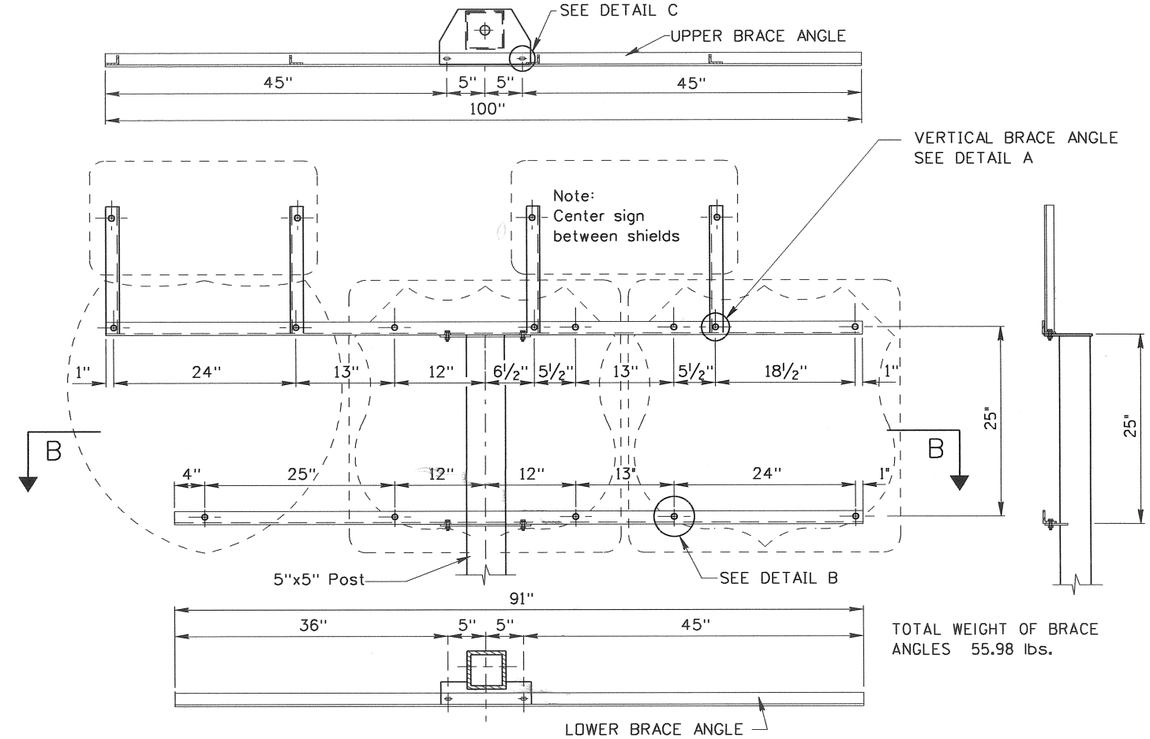

TOTAL WEIGHT OF BRACE ANGLES 55.98 lbs.

SEC. BB

NOTE:
THESE BRACE ANGLE ASSEMBLIES MAY BE MODIFIED TO ACCOMMODATE ADDITIONAL CARDINAL ROUTE MARKERS ABOVE EACH ROUTE SHIELD AS SHOWN ON THE PLANS. CONFIRMING ROUTE MARKERS DO NOT REQUIRE THE VERTICAL BRACE ANGLES.

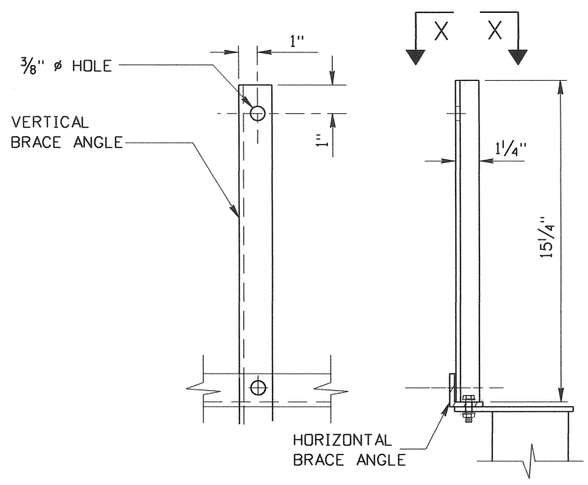

DETAIL A

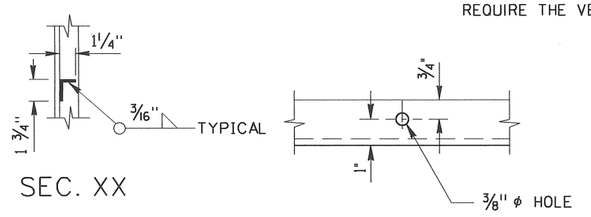

SEC. XX

DETAIL B

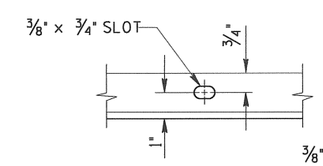

DETAIL C

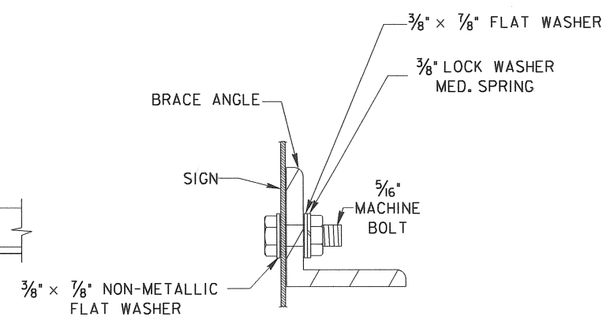

TYPICAL SIGN ATTACHMENT DETAIL

NOTES:

1. WEIGHTS OF BRACE ANGLES DO NOT INCLUDE GALVANIZING.
2. ALL BRACE ANGLES SHALL BE 1¾"x1¾"x¼" AT 2.77 LBS./FT WITH THE EXCEPTION OF THE VERTICAL BRACE ANGLE WHICH SHALL BE 1¾"x1¼"x¼" AT 2.34 LBS./FT.

REVISIONS								
NO.	DATE	BY	NO.	DATE	BY	NO.	DATE	BY
1	12-01	NOB						
2	07-03	NOB						
3	09-10	HEB						

SCALES SHOWN ARE FOR 11" X 17" PRINTS ONLY

CADD FILE NAME: i9b_0910.std

DRAWING DATE: AUGUST, 1992

IDAHO TRANSPORTATION DEPARTMENT

BOISE IDAHO

ASSISTANT CHIEF ENGINEER (DEVELOPMENT)

CHIEF ENGINEER

STANDARD DRAWING

CARDINAL ROUTE MARKER ASSEMBLIES

REQUIRES STD. DWG. I-8-D-1, STD. DWG I-8-D-2 & STD. DWG. I-8-D-3

English

STANDARD DRAWING NO.

I-9-B

SHEET 1 OF 1

PROFESSIONAL ENGINEER REGISTERED 6260 9/23/10 STATE OF IDAHO CARL D. MAIN

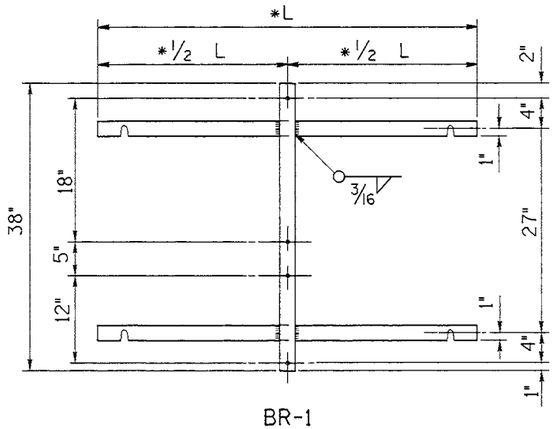

BR-1

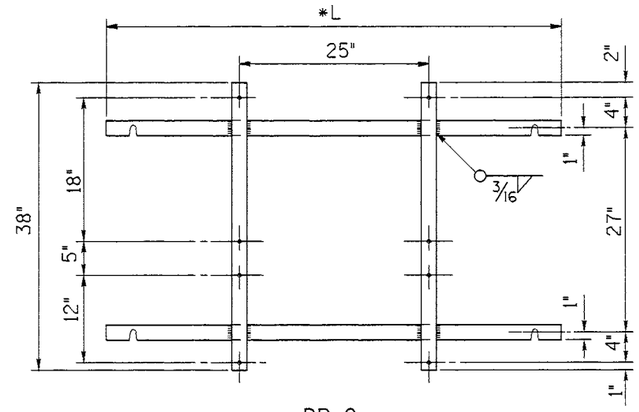

BR-2

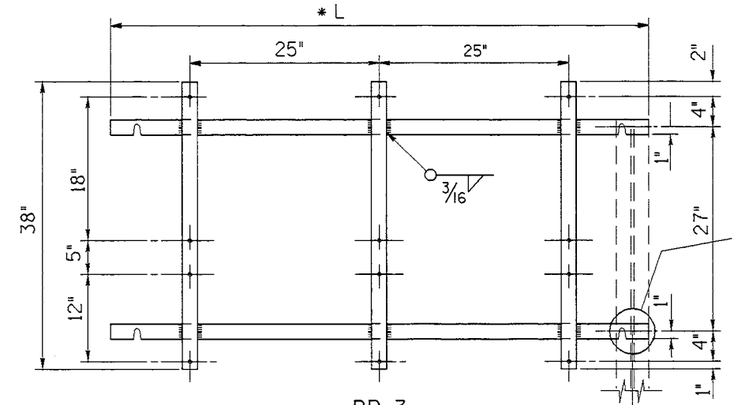

BR-3

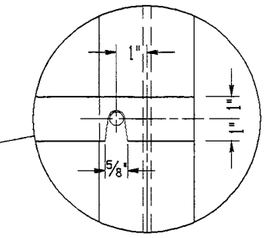

DETAIL OF MOUNTING SLOT

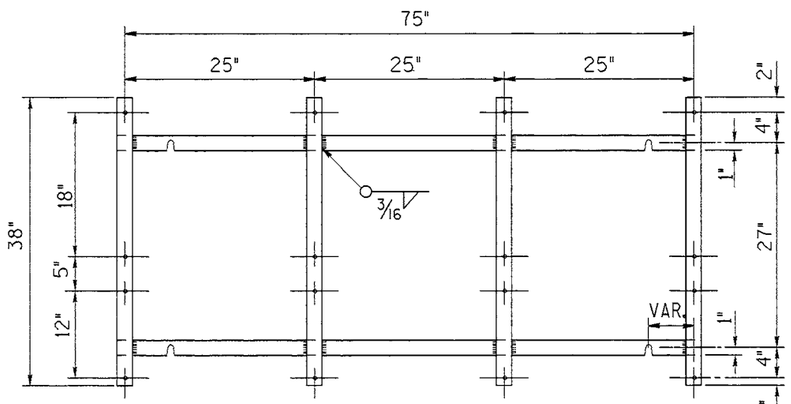

BR-4

NOTES:

1. BRACKETS BR-1 THRU BR-4 MOUNT ON TYPE A POSTS.
2. BRACKETS BR-5 THRU BR-7 MOUNT ON TYPE B POSTS.
3. BRACKET MATERIALS:
   1/4" × 2" BAR AT 1.70 LBS/FT. FOR ALL VERTICAL SUPPORTS AND HORIZONTAL MEMBERS, BR-1 THRU BR-4.
   1 3/4" × 1 3/4" × 1/4" ANGLE AT 2.77 LBS/FT. FOR HORIZONTAL MEMBERS, BR-5 THRU BR-7.
4. ALL SIGN MOUNTING HOLES SHALL BE 3/8" DIA.
5. BRACKETS SHALL BE ATTACHED TO THE POST BY 5/16" DIA. HEX HEAD BOLTS & NUTS WITH TWO FLAT WASHERS AND ONE LOCK WASHER.
6. * BRACKET LENGTH FOR BR-1 THRU BR-3 = ℄ TO ℄ POST SPACING PLUS ONE POST WIDTH.

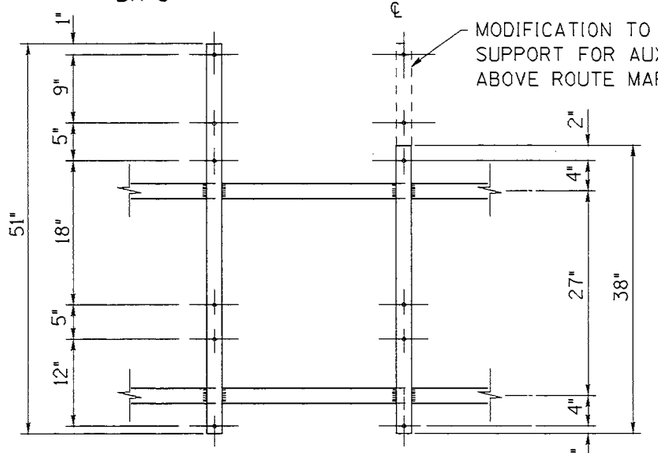

MODIFIED BRACKET
(TYPICAL FOR ALL BRACKETS)

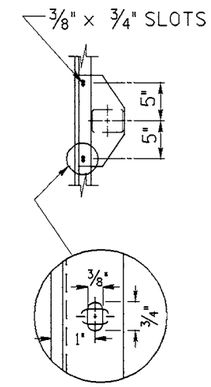

NOTE: FOR BRACKETS THAT REQUIRE THE ABOVE MODIFICATION ADD AN "A" TO THE BRACKET NUMBER: EXAMPLE BR-3A

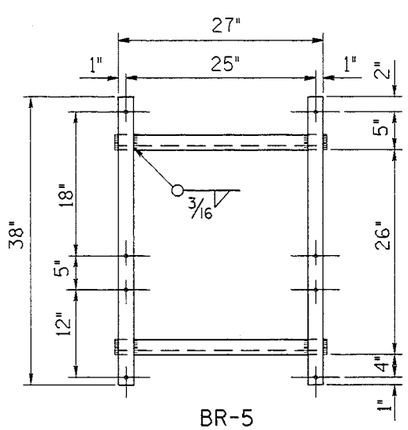

BR-5

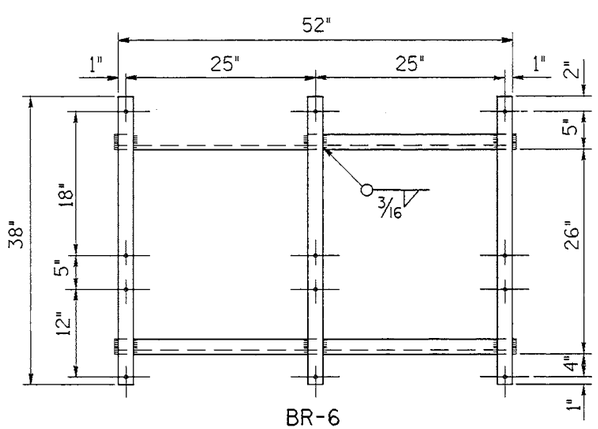

BR-6

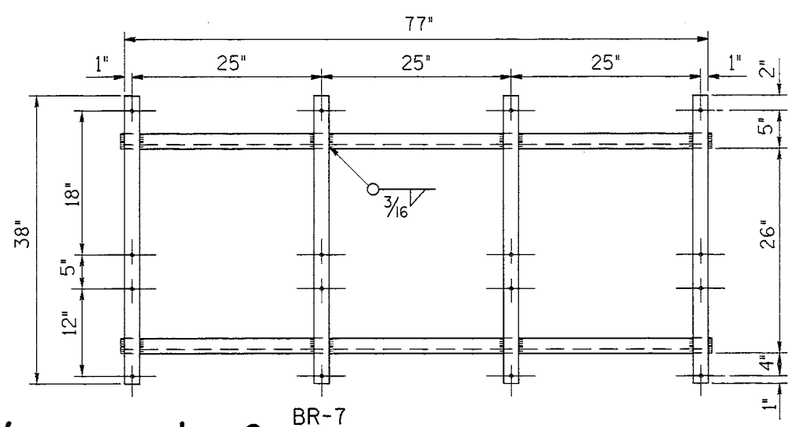

BR-7

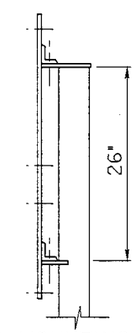

TYP. MOUNTING
BR-5, BR-6, BR-7

REVISIONS											
NO.	DATE	BY	NO.	DATE	BY	NO.	DATE	BY	NO.	DATE	BY
1	12-01	NQB									

SCALES SHOWN ARE FOR 17" X 11" PRINTS ONLY

CADD FILE NAME: I9c_1201.std

DRAWING ORIG. DATE: AUGUST, 1994

IDAHO TRANSPORTATION DEPARTMENT

BOISE, IDAHO

Steven C. Hutchinson
ASSISTANT CHIEF ENGINEER (DEVELOPMENT)

CHIEF ENGINEER

STANDARD DRAWING

ROUTE MARKER BRACKET DETAILS

FORM CATALOG NUMBER

STANDARD DRAWING NO.

I-9-C

SHEET 1 OF 1

PROFESSIONAL ENGINEER REGISTERED
Lance Z. Johnson
7910
12-14-01
STATE OF IDAHO
LANCE Z. JOHNSON

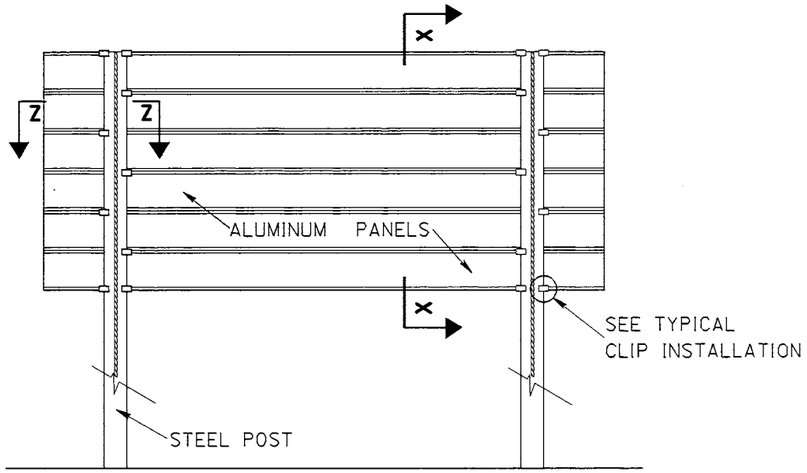

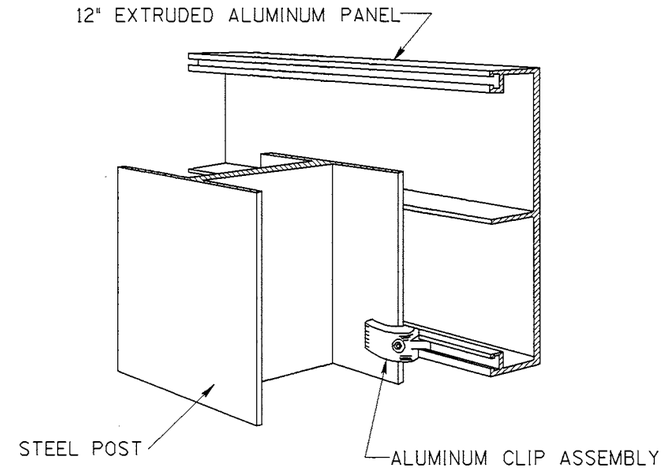

TYPICAL CLIP INSTALLATION

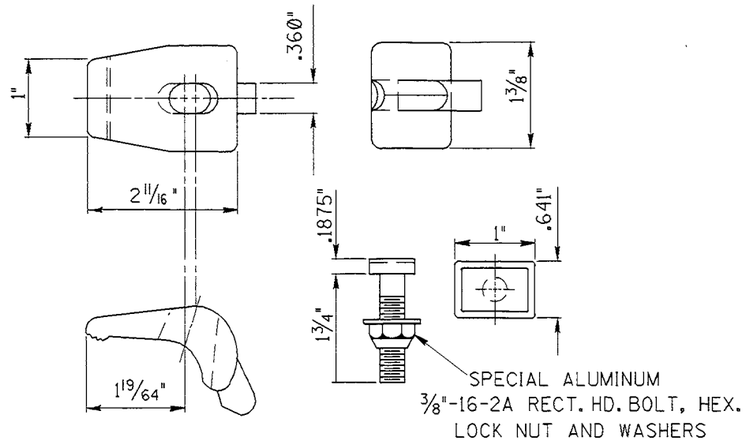

POST CLIP AND POST CLIP BOLT DETAILS

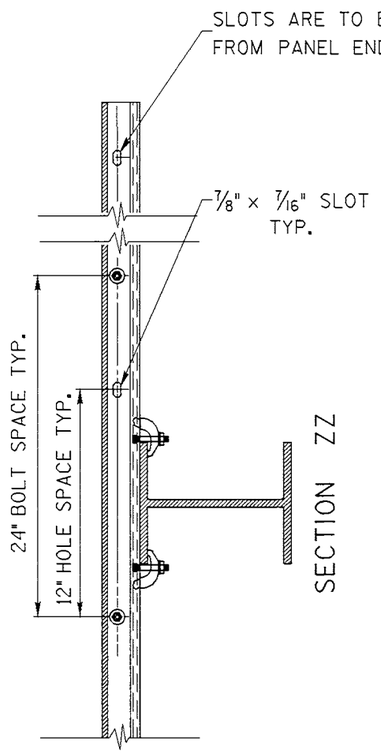

SECTION ZZ

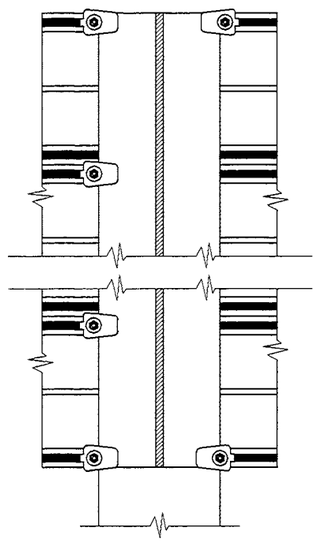

SECTION YY

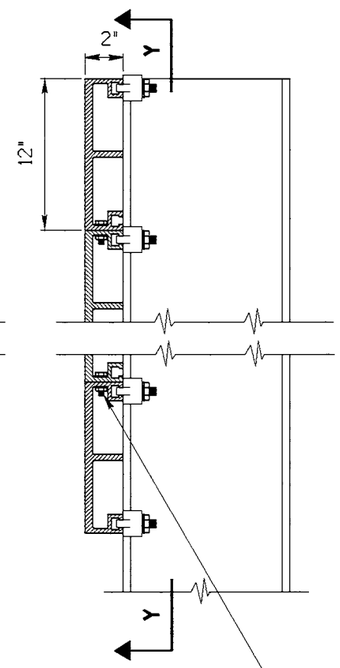

SECTION XX

Sign Height	No. of Clip Assem.	No. of 12" Panels
2'-0"	10	2
3'-0"	12	3
4'-0"	14	4
5'-0"	16	5
6'-0"	18	6
7'-0"	20	7
8'-0"	22	8
9'-0"	24	9
10'-0"	26	10
11'-0"	28	11
12'-0"	30	12
13'-0"	32	13
14'-0"	34	14
15'-0"	36	15
16'-0"	38	16
17'-0"	40	17

INSTALLATION OF SIGN PANELS

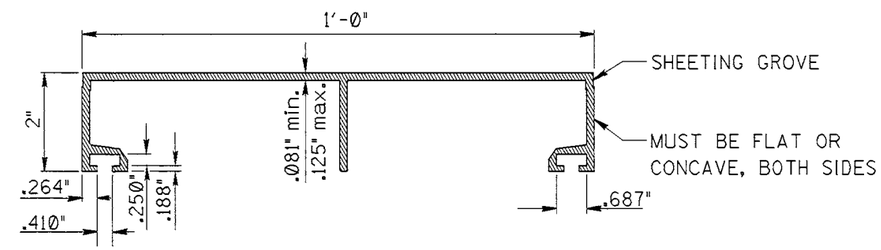

12" EXTRUDED PANEL

1. ASSEMBLY OF EXTRUDED SIGN PANELS SHALL START WITH THE TOP PANEL, WHICH SHALL BE CENTERED ON THE SIGN POSTS. PANELS SHALL BE HORIZONTAL AND ATTACHED TO THE POSTS WITH POST CLIPS AND POST CLIP BOLTS. THE POST CLIPS AND BOLTS SHALL BE STAGGERED ON BOTH SIDES OF EACH POST AS SHOWN IN THE DRAWING. EACH ADJOINING PANEL SHALL BE FLUSH BEFORE TIGHTENING PANEL BOLTS.
2. LOCKNUTS ON THE POST CLIP FASTENERS SHALL BE TORQUED TO 225 INCH POUNDS WITH DRY CLEAN UNLUBRICATED THREADS.
3. WHEN MODIFICATIONS OF EXISTING SIGNS ARE REQUIRED AND ADDITIONAL POST CLIPS MUST BE INSTALLED TO THE INSIDE OF THE SIGN POST, THE CONTRACTOR IS PERMITTED TO FIELD DRILL FOR A POST CLIP INSERTION HOLE IN EXISTING EXTRUSIONS.

REVISIONS

NO.	DATE	BY	NO.	DATE	BY	NO.	DATE	BY	NO.	DATE	BY
1	12-94	HEB									
2	08-96	HEB									
3	12-01	HEB									

SCALES SHOWN ARE FOR 11" × 17" PRINTS ONLY

CADD FILE NAME
110a1201.std

DRAWING DATE:
NOVEMBER, 1992

IDAHO TRANSPORTATION DEPARTMENT

BOISE, IDAHO

ASSISTANT CHIEF ENGINEER (DEVELOPMENT)

CHIEF ENGINEER

STANDARD DRAWING

EXTRUDED ALUMINUM SIGNS

STANDARD DRAWING NO.
I-10-A

SHEET 1 OF 1

PROFESSIONAL ENGINEER REGISTERED 7910 12-14-01 STATE OF IDAHO LANCE Z. JOHNSON

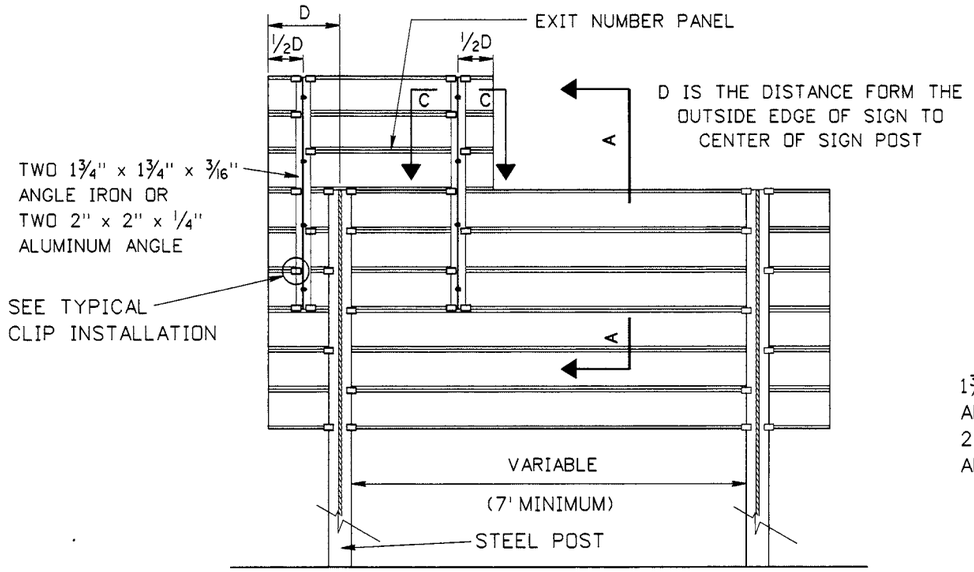

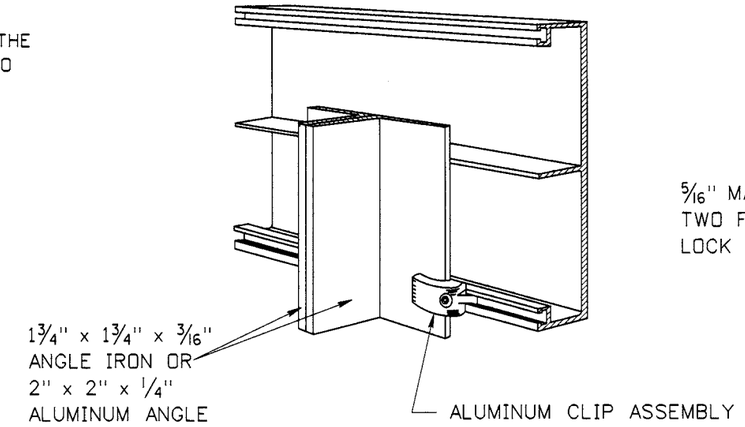

TYPICAL CLIP INSTALLATION FOR EXTRUDED ALUMINUM PANELS

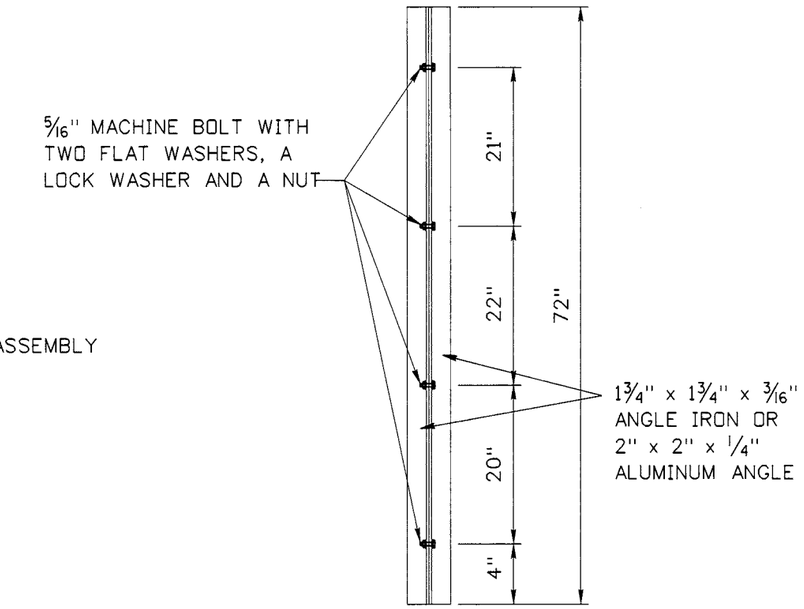

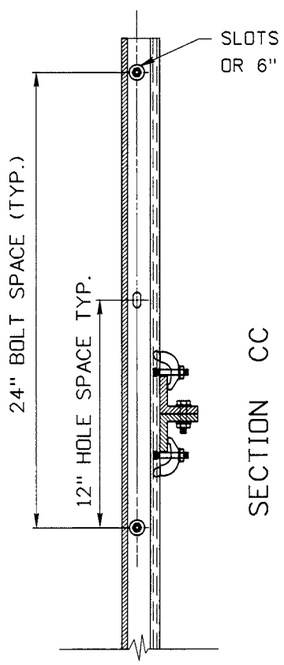

SECTION CC

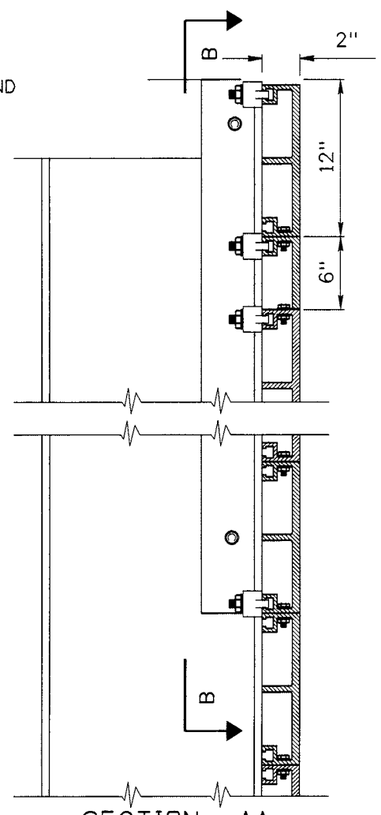

SECTION AA

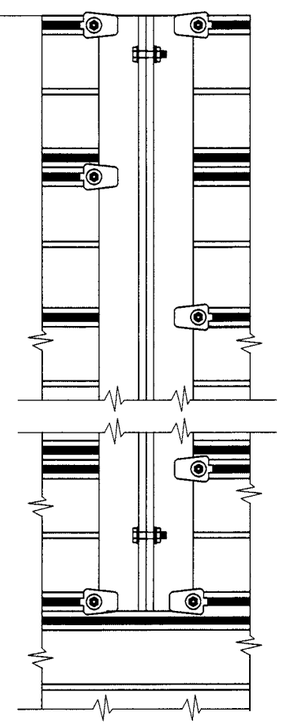

SECTION BB

NOTES:

1. SEE STANDARD DRAWING I-10-A FOR INSTALLATION DETAILS.
2. 1¾" x 1¾" x 3/16" ANGLE IRON WEIGHS 2.12 LBS/FT. WEIGHT OF ANGLE IRON DOES NOT INCLUDE GALVANIZING.
3. 2" x 2" x ¼" ALUMINUM ANGLE WEIGHS 1.11 LBS/FT.

REVISIONS

NO.	DATE	BY	NO.	DATE	BY	NO.	DATE	BY
1	12-01	NQB						
2	01-04	HEB						
3	12-07	HEB						

SCALES SHOWN ARE FOR 11" X 17" PRINTS ONLY

CADD FILE NAME: i10b1207.std

DRAWING DATE: April, 1992

IDAHO TRANSPORTATION DEPARTMENT

BOISE IDAHO

ASSISTANT CHIEF ENGINEER (DEVELOPMENT)

CHIEF ENGINEER

STANDARD DRAWING

EXIT NUMBER PANELS

REQUIRES STD. DWG. I-10-A

English

STANDARD DRAWING NO.

I-10-B

SHEET 1 OF 1

PROFESSIONAL ENGINEER REGISTERED 5507 STATE OF IDAHO 12/1/07 BRENT JENNINGS

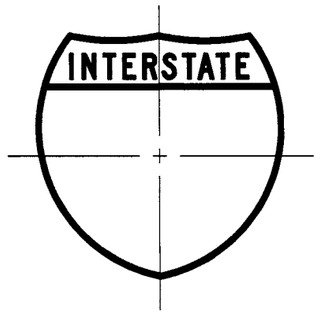

M1-1 (24"x24")
M1-1A (36"x36")

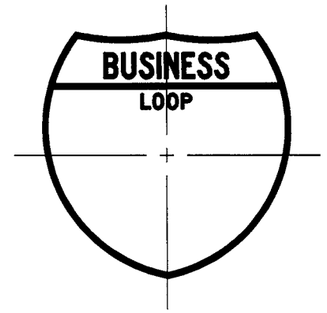

M1-2 (24"x24")
M1-2A (36"x36")

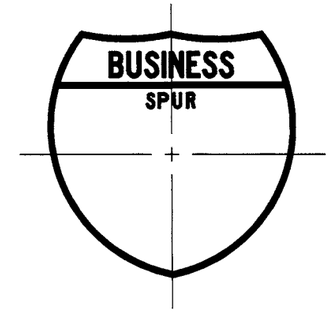

M1-3 (24"x24")
M1-3A (36"x36")

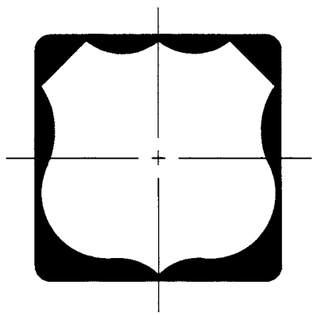

INDEPENDENT USE

M1-4 (24"x24")
M1-4A (36"x36")

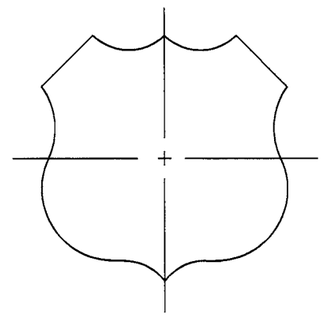

GUIDE SIGN USE

M1-5 (24"x24")
M1-5A (36"x36")

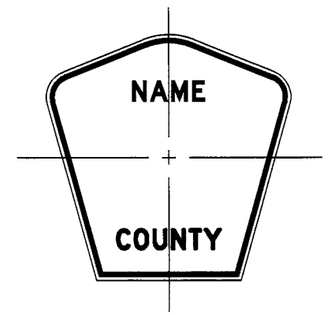

M1-6 (24"x24")
M1-6A (36"x36")

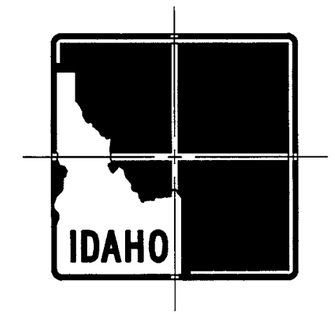

INDEPENDENT USE

M1-7 (24"x24")
M1-7A (36"x36")
(See M1-8 & M1-8A For Detail)

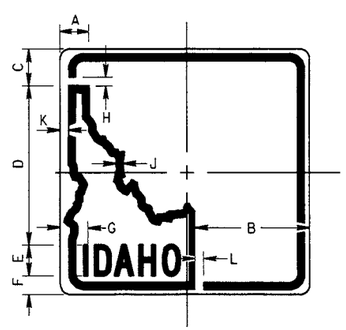

GUIDE SIGN USE

M1-8 (24"x24")
M1-8A (36"x36")

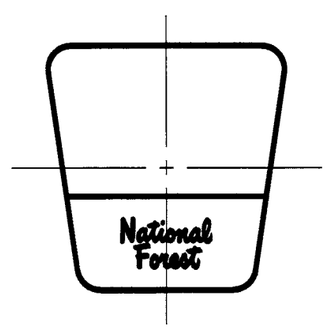

M1-9 (24"x24")

NOTES:

1. ALL ROUTE MARKERS SHALL BE IN ACCORDANCE WITH THE MANUAL ON UNIFORM TRAFFIC CONTROL DEVICES AS ADOPTED BY THE STATE, OR AS SHOWN.
2. ROUTE MARKING NUMERALS ARE SHOWN ON STANDARD DRAWING I-11-B.
3. ROUTE MARKERS FOR GUIDE SIGN USE SHALL BE RIVITED TO THE SIGN FACE. ALL OTHER ROUTE MARKERS SHALL BE PUNCHED WITH 3/8" DIAMETER HOLES. SEE STANDARD DRAWING I-12-F FOR HOLE LOCATION.

Sign Size	A	B	C	D	E	F	G	H	J	K	L
24"x24"	3 5/16"	9 5/16"	2 5/16"	16 7/16"	2 1/4"D	3"	2 5/8"	1/2"	5/8"	3/8"	7/8"
36"x36"	5"	14"	3 1/2"	24 3/4"	3"E	4 3/4"	4"	1"	1 1/8"	3/4"	1 3/8"

REVISIONS

NO.	DATE	BY	NO.	DATE	BY	NO.	DATE	BY
1	12-01	NQB						
2	07-03	NQB						

SCALES SHOWN ARE FOR 11" X 17" PRINTS ONLY

CADD FILE NAME: 111a0703.std

DRAWING ORIG. DATE: NOVEMBER, 1991

IDAHO TRANSPORTATION DEPARTMENT

BOISE IDAHO

ASSISTANT CHIEF ENGINEER (DEVELOPMENT)

CHIEF ENGINEER

STANDARD DRAWING

STANDARD ROUTE MARKERS

REQUIRES STD. DWG. I-11-B & STD.DWG. I-12-F

English

STANDARD DRAWING NO.

I-11-A

SHEET 1 OF 1

PROFESSIONAL ENGINEER REGISTERED 7910 7-1-03 STATE OF IDAHO LANCE Z. JOHNSON

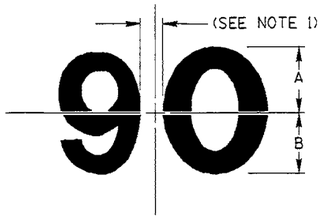

ROUTE MARKER NO.	NUMERAL HEIGHT	NUMERAL SERIES	DIMENSION A	DIMENSION B
M1-1 (24")	12"	"D" *	5½"	6½"
M1-1A (36")	18"	"D" *	8¼"	9¾"

* EXCEPT FOR NUMERAL "84" WHICH SHALL BE NUMERAL SERIES "C".

INTERSTATE SHIELD
(2 DIGIT)

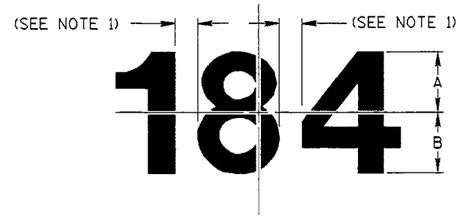

ROUTE MARKER NO.	NUMERAL HEIGHT	NUMERAL SERIES	DIMENSION A	DIMENSION B
M1-1 (24")	12"	"B"	5½"	6½"
M1-1A (36")	18"	"B"	8¼"	9¾"

INTERSTATE SHIELD
(3 DIGIT)

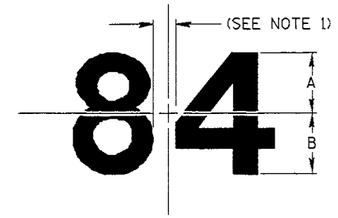

ROUTE MARKER NO.	NUMERAL HEIGHT	NUMERAL SERIES	DIMENSION A	DIMENSION B
M1-2 (24")	10"	"D"	4"	6"
M1-2A (36")	15"	"D"	6"	9"

BUSINESS LOOP MARKER

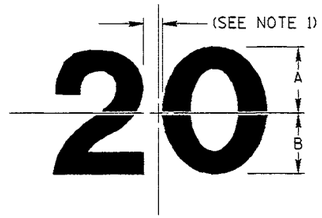

ROUTE MARKER NO.	NUMERAL HEIGHT	NUMERAL SERIES	DIMENSION A	DIMENSION B
M1-4, M1-5(24")	12"	"D"	6½"	5½"
M1-4A, M1-5A(36")	18"	"D"	9¾"	8¼"

US ROUTE MARKER

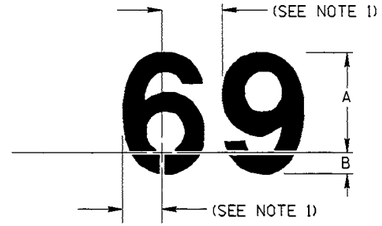

ROUTE MARKER NO.	NUMERAL HEIGHT	NUMERAL SERIES	DIMENSION A	DIMENSION B
M1-7, M1-8(24")	10"	"C"	8⅞"	1⅛"
M1-7A, M1-8A(36")	15"	"C"	13½"	1½"

STATE ROUTE MARKER

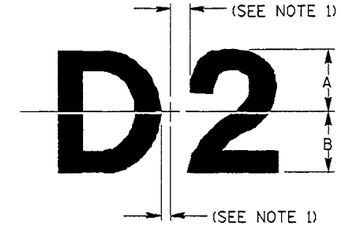

ROUTE MARKER NO.	NUMERAL HEIGHT	NUMERAL SERIES	DIMENSION A	DIMENSION B
M1-6 (24")	8"	"C"	3"	5"
M1-6A (36")	12"	"C"	4"	8"

COUNTY ROUTE MARKER

NOTES:

1. USE "STANDARD ALPHABET FOR HIGHWAY SIGNS" FOR SPACING BETWEEN NUMERALS. ALL NUMERALS ARE TO BE PLACED OPTICALLY ABOUT VERTICAL CENTERLINE.
2. NUMERALS ARE USED WITH MATCHING ROUTE MARKERS SHOWN ON STANDARD DRAWING I-11-A.
3. 15" NUMERAL HEIGHT IS NOT FOUND IN THE PUBLICATION "STANDARD ALPHABET FOR HIGHWAY SIGNS". THE WIDTH AND SPACING BETWEEN THE NUMERALS SHALL BE THE AVERAGE OF THE SPACING FOR 12" AND FOR 18" NUMERAL HEIGHT.

REVISIONS											
NO.	DATE	BY	NO.	DATE	BY	NO.	DATE	BY	NO.	DATE	BY
1	08-96	HEB									
2	12-01	NQB									

SCALES SHOWN ARE FOR 17" X 11" PRINTS ONLY

CADD FILE NAME: I11b1201.std

DRAWING ORIG. DATE: DECEMBER, 1993

IDAHO TRANSPORTATION DEPARTMENT

BOISE, IDAHO

Steven C. Hutchinson
ASSISTANT CHIEF ENGINEER (DEVELOPMENT)

CHIEF ENGINEER

STANDARD DRAWING

ROUTE MARKER NUMERAL DETAILS

REQUIRES STD. DWG. I-11-A

FORM CATALOG NUMBER

STANDARD DRAWING NO.

I-11-B

SHEET 1 OF 1

PROFESSIONAL ENGINEER REGISTERED Lance Z. Johnson 7810 12-14-01 STATE OF IDAHO LANCE Z. JOHNSON

M2-1 (21"X15")

M3-1 (24"X12")
M3-1A (30"X15")

M3-2 (24"X12")
M3-2A (30"X15")

M3-3 (24"X12")
M3-3A (30"X15")

M3-4 (24"X12")
M3-4A (30"X15")

M4-1 (24"X12")

M4-3 (24"X12")

M4-5 (24"X12")
M4-5A (30"X15")

M4-6 (24"X12")

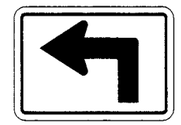

M5-1 LorR (21"X15")

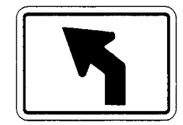

M5-2 LorR (21"X15")

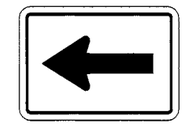

M6-1 LorR (21"X15")

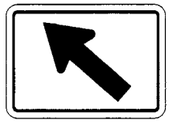

M6-2 LorR (21"X15")

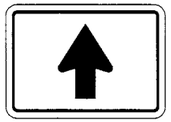

M6-3 (21"X15")

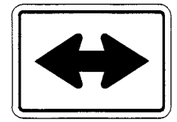

M6-4 (21"X15")

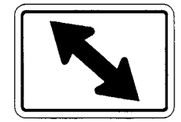

M6-5 LorR (21"X15")

M6-6 LorR (21"X15")

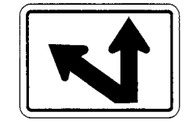

M6-7 LorR (21"X15")

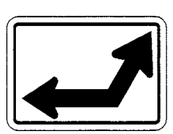

M6-8 LorR (21"X15")

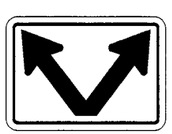

M6-9 (21"X15")

NOTES:

1. ROUTE MARKER AUXILIARIES WHEN USED WITH A U.S. OR STATE SHIELD SHALL HAVE A WHITE REFLECTORIZED BACKGROUND WITH AN OPAQUE BLACK LEGEND AND BORDER.
2. ROUTE MARKER AUXILIARIES WHEN USED WITH AN INTERSTATE SHIELD AND/OR BUSINESS LOOP SHIELD SHALL HAVE A BLUE OR GREEN REFLECTORIZED BACKGROUND WITH A WHITE REFLECTORIZED LEGEND AND BORDER. SIGNS SHALL BE DESIGNATED WITH A (bl) FOR BLUE OR A (g) FOR GREEN BACKGROUNDS. EXAMPLES: M6-6L(bl), M6-1L(g).
3. ROUTE MARKER AUXILIARIES WHEN USED WITH A SCENIC ROUTE MARKER SHALL HAVE A BROWN REFLECTORIZED BACKGROUND WITH A WHITE REFLECTORIZED LEGEND AND BORDER. SIGNS SHALL BE DESIGNATED WITH (br) FOR BROWN BACKGROUNDS. EXAMPLE: M3-1(br).
4. ALL SIGNS SHALL BE IN ACCORDANCE WITH THE MANUAL ON UNIFORM TRAFFIC CONTROL DEVICES AS ADOPTED BY THE STATE.
5. SIGNS SHALL BE PUNCHED WITH THE REQUIRED NUMBER OF 3/8" DIAMETER MOUNTING HOLES, AS SHOWN ON STANDARD DRAWING I-12-F.
6. THE FIRST LETTER OF THE M3-1, M3-2, M3-3, AND THE M3-4 SHALL BE 7" IN HEIGHT. THE FIRST LETTER OF THE M3-1A, M3-2A, M3-3A, AND M3-4A SHALL BE 9" IN HEIGHT.

REVISIONS								
NO.	DATE	BY	NO.	DATE	BY	NO.	DATE	BY
1	12-01	HEB						
2	07-03	HEB						

SCALES SHOWN ARE FOR 11" X 17" PRINTS ONLY

CADD FILE NAME: I11C0703.std

DRAWING ORIG. DATE: APRIL, 1992

IDAHO TRANSPORTATION DEPARTMENT

BOISE IDAHO

ASSISTANT CHIEF ENGINEER (DEVELOPMENT)

CHIEF ENGINEER

STANDARD DRAWING

ROUTE MARKER AUXILIARY PANELS

REQUIRES STD. DWG. I-12-F

English

STANDARD DRAWING NO.

I-11-C

SHEET 1 OF 1

PROFESSIONAL ENGINEER REGISTERED 9910 7-1-03 STATE OF IDAHO LANCE Z. JOHNSON

R1-1 (30"X30")
R1-1A (36"X36")
R1-1B (48"X48")

R1-2 (36"X36"X36")
R1-2A (48"X48"X48")
R1-2B (60"X60"X60")

R2-1 (24"X30")
R2-1A (36"X48")
R2-1B (48"X60")

R2-2 (24"X24")
R2-2A (36"X36")
R2-2B (48"X48")

R2-4 (24"X30")
R2-4A (36"X48")
R2-4B (48"X60")

R3-1L (24"X24")
R3-1AL (36"X36")

R3-1R (24"X24")
R3-1AR (36"X36")

R3-4 (24"X24")
R3-4A (36"X36")

R3-5 LorR (30"X36")

R3-6 LorR (30"X36")

R3-7 LorR (30"X30")
R3-7A LorR (36"X36")
R3-7B LorR (48"X48")

R3-8 LorR (30"X30")

R3-10 (24"X36")
R3-10A (36"X48")

R3-11 (30"X36")

R4-1 (24"X30")
R4-1A (36"X48")
R4-1B (48"X60")

R4-2 (24"X30")
R4-2A (36"X48")
R4-2B (48"X60")

R4-4 (24"X30")
R4-4A (36"X48")
R4-4B (48"X60")

R4-5 (24"X30")
R4-5A (36"X48")
R4-5B (48"X60")

R4-6 (24"X30")
R4-6A (36"X48")
R4-6B (48"X60")

R4-7 (24"X30")
R4-7A (36"X48")
R4-7B (48"X60")

R5-1 (30"X30")
R5-1A (36"X36")

R5-9 (30"X18")
R5-9A (36"X24")

R6-1 LorR (36"X12")

R8-7 (30"X24")
R8-7A (48"X36")

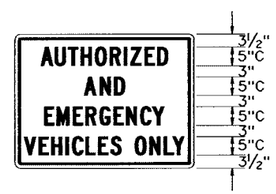

R8-8 (48"X36")

R10-10 LorR (24"X30")
R10-10A LorR (30"X36")

NOTES:

1. ALL SIGNS SHALL BE IN ACCORDANCE WITH THE MANUAL ON UNIFORM TRAFFIC CONTROL DEVICES AS ADOPTED BY THE STATE.
2. SIGNS SHALL BE PUNCHED WITH THE REQUIRED NUMBER OF ⅜" DIAMETER MOUNTING HOLES AS SHOWN ON STANDARD DRAWING I-12-F.
3. THE STOP SIGNS, YIELD SIGNS, WRONG WAY SIGNS, AND DO NOT ENTER SIGNS SHALL HAVE CLASS "B" REFLECTIVE SHEETING. SEE SECTION 712.02 OF THE IDAHO STANDARD SPECIFICATIONS FOR HIGHWAY CONSTRUCTION.

REVISIONS

NO.	DATE	BY	NO.	DATE	BY	NO.	DATE	BY
1	12-93	HEB						
2	12-01	NQB						
3	07-03	NQB						
4	06-07	HEB						

SCALES SHOWN ARE FOR 11" X 17" PRINTS ONLY

CADD FILE NAME: i12a0607.std

DRAWING DATE: JANUARY, 1991

IDAHO TRANSPORTATION DEPARTMENT

BOISE IDAHO

ASSISTANT CHIEF ENGINEER (DEVELOPMENT)

CHIEF ENGINEER

STANDARD DRAWING

STANDARD REGULATORY SIGNS

REQUIRES STD. DWG. I-12-F

English

STANDARD DRAWING NO.

I-12-A

SHEET 1 OF 1

PROFESSIONAL ENGINEER REGISTERED 5507 STATE OF IDAHO BRENT JENNINGS

W1-1 LorR (30"X30")
W1-1A LorR (36"X36")
✳ W1-1B LorR (48"X48")

W1-2 LorR (30"X30")
W1-2A LorR (36"X36")
✳ W1-2B LorR (48"X48")

W1-3 LorR (30"X30")
W1-3A LorR (36"X36")
✳ W1-3B LorR (48"X48")

W1-4 LorR (30"X30")
W1-4A LorR (36"X36")
✳ W1-4B LorR (48"X48")

W1-5 LorR (30"X30")
W1-5A LorR (36"X36")
W1-5B LorR (48"X48")

✳ W1-6 LorR (48"X24")
✳ W1-6A LorR (60"X36")

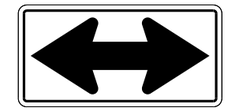

W1-7 (48"X24")
W1-7A (60"X36")

W1-8B LorR (48"X48")

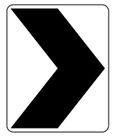

W1-9 (12"X18")
W1-9A (18"X24")

W2-1 (30"X30")
W2-1A (36"X36")

W2-2 (30"X30")
W2-2A (36"X36")
W1-9B (24"X30")

W3-1A (36"X36")
✳ W3-1B (48"X48")
W2-1B (48"X48")

W3-2A (36"X36")
✳ W3-2B (48"X48")
W2-2B (48"X48")

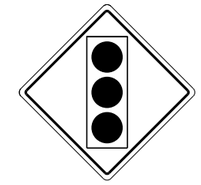

W3-3A (36"X36")
✳ W3-3B (48"X48")

W3-5A (36"X36")
✳ W3-5B (48"X48")

W3-5TA (36"X36")
✳ W3-5TB (48"X48")

W4-1 LorR (30"X30")
W4-1A LorR (36"X36")
W4-1B LorR (48"X48")

W4-2A LorR (36"X36")
✳ W4-2B LorR (48"X48")

W6-1A (36"X36")
✳ W6-1B (48"X48")

W6-2A (36"X36")
✳ W6-2B (48"X48")

W6-3 (30"X30")
W6-3A (36"X36")
✳ W6-3B (48"X48")

W9-1 LorR (30"X30")
W9-1A LorR (36"X36")
✳ W9-1B LorR (48"X48")

W9-2 LorR (30"X30")
W9-2A LorR (36"X36")
✳ W9-2B LorR (48"X48")

W12-1 (30"X30")
W12-1A (36"X36")
✳ W12-1B (48"X48")

W12-2A (36"X36")
W12-2B (48"X48")

✳ W13-1A (24"X24")

W13-2 (24"X30")
W13-2A (36"X48")
W13-2B (48"X60")

✳ W14-3 (48"X36")

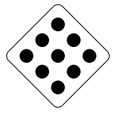

OM-1 (y)or(r) (18"X18")

NOTES:

1. ALL SIGNS SHALL BE IN ACCORDANCE WITH THE CURRENT MANUAL ON UNIFORM TRAFFIC CONTROL DEVICES AS ADOPTED BY THE STATE.
2. SIGNS SHALL BE PUNCHED WITH THE REQUIRED NUMBER OF 3/8" DIAMETER MOUNTING HOLES, AS SHOWN ON STANDARD DRAWING I-12-F.
3. ✳ SIGNS INDICATED HAVE EITHER A YELLOW OR AN ORANGE (o) BACKGROUND, DEPENDING ON THEIR USE. THE SIGN NUMBERS SHALL BE DESIGNATED SUCH AS: W1-1L FOR YELLOW OR W1-1L(o) FOR ORANGE.
4. DASHED NUMBERS INDICATED ARE VARIABLE.

ORIGINAL STORED AT: ITD, Headquarters 3311 West State Boise, Idaho

ORIGINAL SIGNED BY: CARL MAIN
DATE ORIGINAL SIGNED: SEPTEMBER 27, 2011

REVISIONS

NO.	DATE	BY	NO.	DATE	BY	NO.	DATE	BY
1	12-93	HEB						
2	12-01	HEB						
3	07-03	HEB						
4	06-07	HEB						
5	09-11	HEB						

SCALES SHOWN ARE FOR 11" X 17" PRINTS ONLY

CADD FILE NAME: i12d0911.std

DRAWING DATE: DECEMBER, 1993

IDAHO TRANSPORTATION DEPARTMENT

BOISE IDAHO

ORIGINAL SIGN BY: LOREN THOMAS
HIGHWAYS PROGRAM OVERSITE ENGINEER
ORIGINAL SIGN BY: TOM COLE
CHIEF ENGINEER

STANDARD DRAWING

STANDARD WARNING SIGNS

REQUIRES STD. DWG. I-12-F

English

STANDARD DRAWING NO.

I-12-D

SHEET 1 OF 1

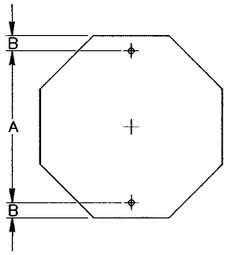

SIGN SIZE	A	B
30"X30"	24"	3"

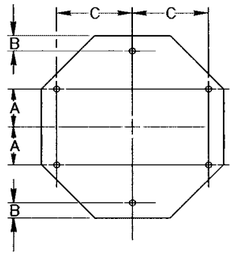

SIGN SIZE	A	B	C
36"X36"	8"	3"	12"
48"X48"	10"	—	20"

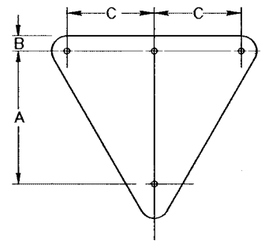

SIGN SIZE	A	B	C
30"X30"	18"	3"	—
36"X36"	23"	3"	—
48"X48"	25"	3"	17"
60"X60"	35"	4"	23"

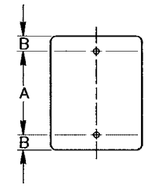

SIGN SIZE	A	B
6"X12"	9"	1½"
6"X18"	15"	1½"
9"X12"	9"	1½"
12"X18"	15"	1½"
12"X30"	24"	3"
12"X36"	32"	2"
18"X24"	18"	3"
24"X30"	24"	3"
24"X36"	30"	3"
30"X36"	30"	3"

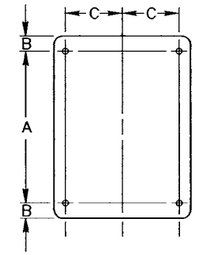

SIGN SIZE	A	B	C
36"X36"	30"	3"	15"
36"X48"	42"	3"	15"
48"X30"	24"	3"	15"
48"X36"	30"	3"	15"
60"X36"	30"	3"	21"

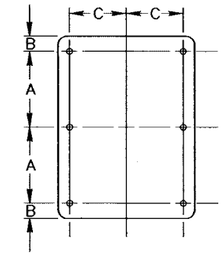

SIGN SIZE	A	B	C
48"X60"	27"	3"	15"

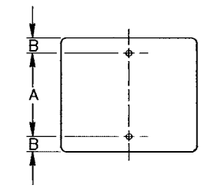

SIGN SIZE	A	B
12"X6"	3"	1½"
18"X9"	6"	1½"
18"X12"	9"	1½"
18"X18"	15"	1½"
21"X15"	12"	1½"
24"X6"	3"	1½"
24"X10"	7"	1½"
24"X12"	9"	1½"
24"X18"	15"	1½"
24"X24"	18"	3"
30"X18"	12"	3"
30"X24"	18"	3"
30"X30"	24"	3"
36"X24"	18"	3"
36"X30"	24"	3"
42"X24"	18"	3"
42"X30"	24"	3"
42"X36"	30"	3"

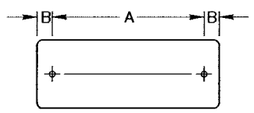

SIGN SIZE	A	B
30"X15"	24"	3"
36"X12"	30"	3"
36"X18"	30"	3"
48"X12"	42"	3"
48"X18"	42"	3"

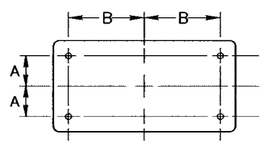

SIGN SIZE	A	B
48"X24"	9"	20"

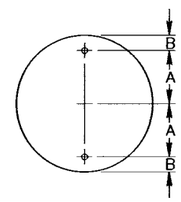

SIGN SIZE	A	B
36"	15"	3"
48"	21"	3"

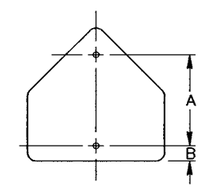

SIGN SIZE	A	B
30"X30"	21"	3"
36"X36"	24"	3"

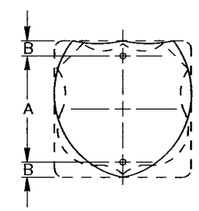

SIGN SIZE	A	B
24"X24"	18"	3"

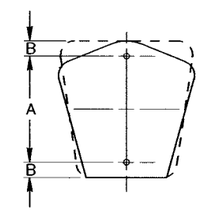

SIGN SIZE	A	B
24"X24"	18"	3"

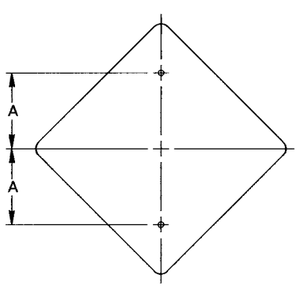

SIGN SIZE	A
18"X18"	10"
24"X24"	12"
30"X30"	15"

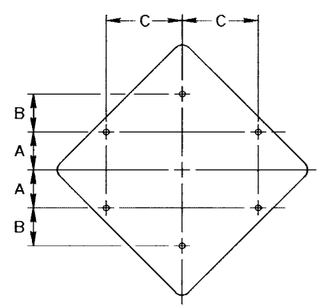

SIGN SIZE	A	B	C
36"X36"	8"	10"	12"
48"X48"	10"	—	20"

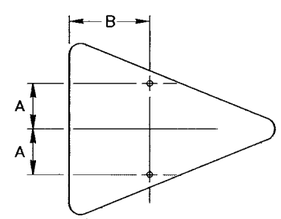

SIGN SIZE	A	B
36"X48"	9"	16"

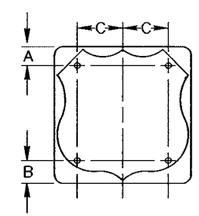

SIGN SIZE	A	B	C
36"X36"	5"	6"	12"

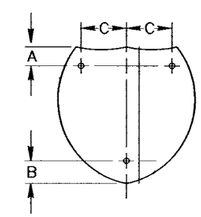

SIGN SIZE	A	B	C
36"X36"	5"	6"	12"

NOTE:

1. ALL MOUNTING HOLES SHALL BE ⅜" DIAMETER

REVISIONS								
NO.	DATE	BY	NO.	DATE	BY	NO.	DATE	BY
1	12-01	NQB						
2	06-07	HEB						

SCALES SHOWN ARE FOR 11" X 17" PRINTS ONLY

CADD FILE NAME: i12f0607.std

DRAWING DATE: DECEMBER, 1994

IDAHO TRANSPORTATION DEPARTMENT

BOISE IDAHO

ASSISTANT CHIEF ENGINEER (DEVELOPMENT)

CHIEF ENGINEER

STANDARD DRAWING

PUNCHING SCHEDULE FOR TYPE "B" OR TYPE "E" SIGNS

English

STANDARD DRAWING NO.

I-12-F

SHEET 1 OF 1

PROFESSIONAL ENGINEER REGISTERED 5507 STATE OF IDAHO BRENT JENNINGS

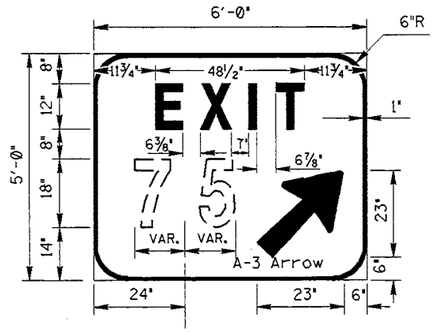

E5-1

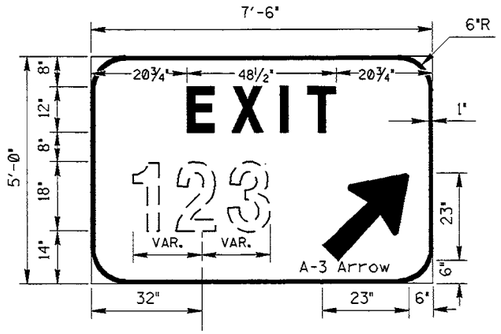

E5-101

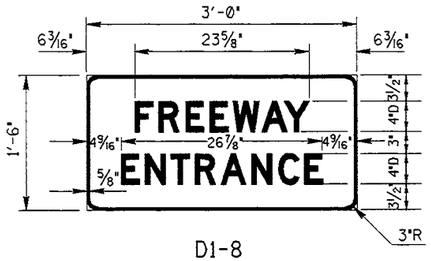

D1-8

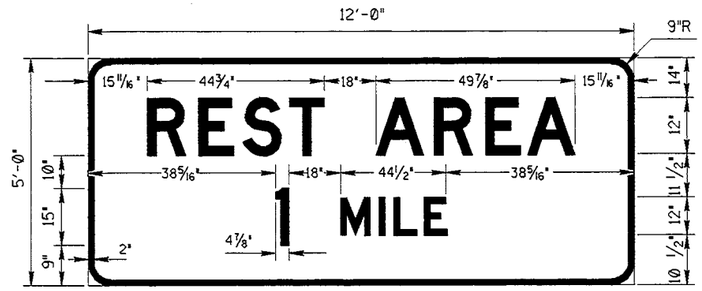

D5-1A

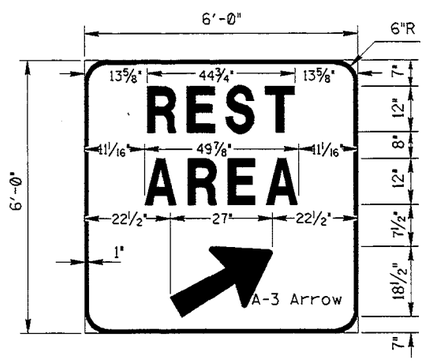

D5-2A

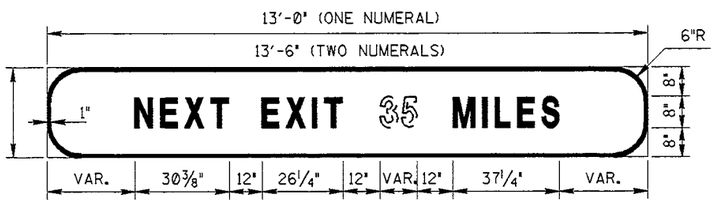

E2-1

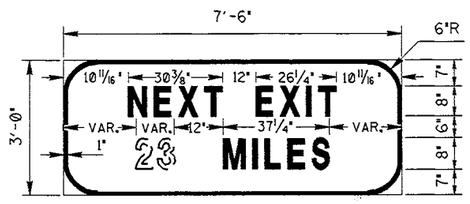

E2-101

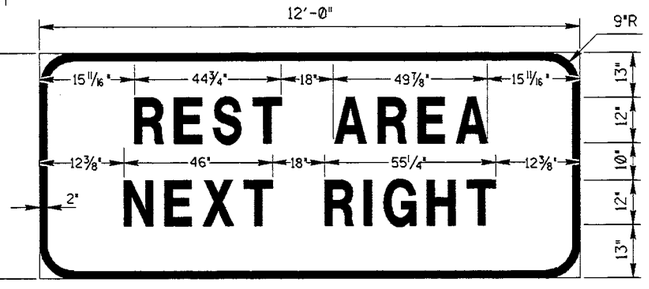

D5-6

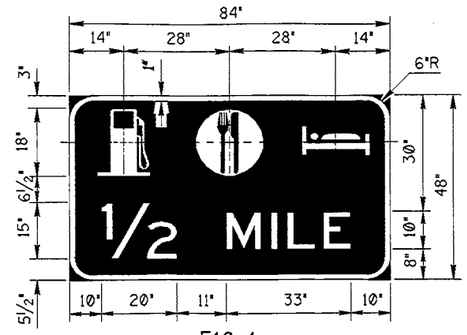

E10-1

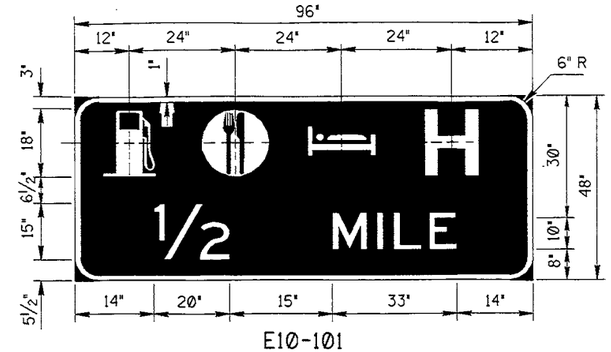

E10-101

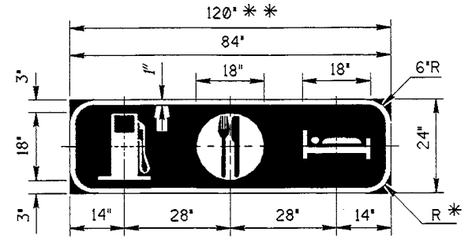

E10-2

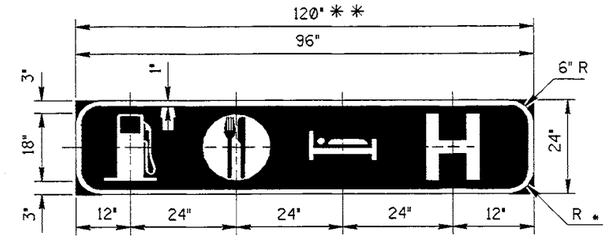

E10-201

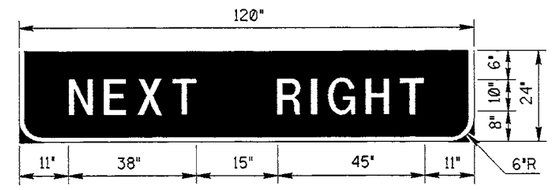

E10-1B

* WHERE BOTTOM PANEL E10-1B IS USED, MAKE R CORNERS SQUARE.

* * INDICATES DIMENSION WHEN E10-1B BOTTOM PANEL IS USED.

D9-2 (24"x24")

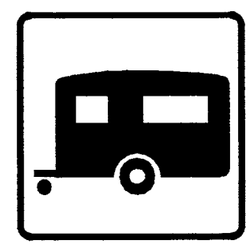

D9-4 (24"x24")

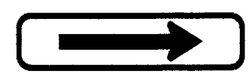

D9-6 (24"x6")

TYPICAL EXAMPLES OF MOTORIST SERVICES SIGNS

NOTES:

1. SIGNS D1-8, E5-1, E5-101, E2-1, AND E2-101 SHALL HAVE GREEN REFLECTORIZED BACKGROUNDS.
2. SIGNS D5-1A THRU D5-6 & E10-1, E10-101, E10-1B, E10-2, AND E10-201 SHALL HAVE BLUE REFLECTORIZED BACKGROUNDS.
3. SIGNS D9-2 THRU D9-6 SHALL HAVE BLUE REFLECTORIZED BACKGROUNDS WITH WHITE REFLECTORIZED LEGENDS AND BORDERS.
4. ALL SIGNS SHALL BE IN CONFORMANCE WITH THE CURRENT EDITION OF THE MANUAL ON UNIFORM TRAFFIC CONTROL DEVICES.

REVISIONS											
NO.	DATE	BY	NO.	DATE	BY	NO.	DATE	BY	NO.	DATE	BY
1	12-01	NOB									

SCALES SHOWN ARE FOR 17" X 11" PRINTS ONLY

CADD FILE NAME: 113a1201.std

DRAWING ORIG. DATE: NOVEMBER, 1992

IDAHO TRANSPORTATION DEPARTMENT

BOISE, IDAHO

ASSISTANT CHIEF ENGINEER (DEVELOPMENT)

CHIEF ENGINEER

STANDARD DRAWING

STANDARD GUIDE AND SERVICE SIGNS

FORM CATALOG NUMBER

STANDARD DRAWING NO. I-13-A

SHEET 1 OF 1

PROFESSIONAL ENGINEER REGISTERED 10 12-14-01 STATE OF IDAHO LANCE Z. JOHNSON

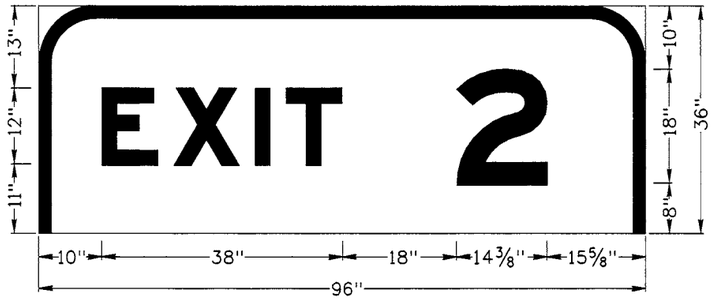

E1-5; 9.000" RADIUS, 2.000" BORDER, WHITE ON GREEN;
[EXIT] E MOD; [34] E MOD;
TABLE OF LETTER AND OBJECT LEFTS.

E	X	I	T	2
10"	21 3/8"	34 1/4"	39 1/8"	66"

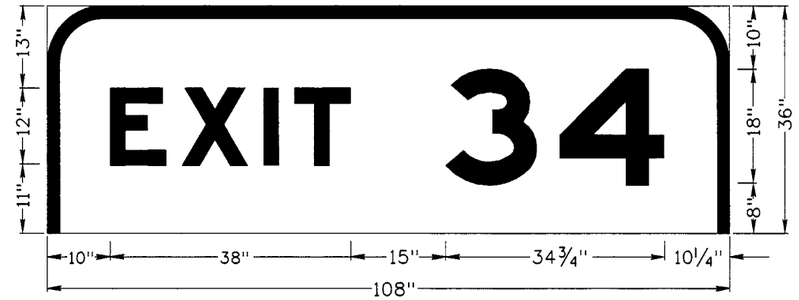

E1-5; 9.000" RADIUS, 2.000" BORDER, WHITE ON GREEN;
[EXIT] E MOD; [34] E MOD;
TABLE OF LETTER AND OBJECT LEFTS.

E	X	I	T	3	4
10"	21 3/8"	34 1/4"	39 1/8"	63"	81 1/8"

E1-5; 9.000" RADIUS, 2.000" BORDER, WHITE ON GREEN;
[EXIT] E MOD; [34] E MOD;
TABLE OF LETTER AND OBJECT LEFTS.

E	X	I	T	2	3	4
8 1/8"	19 1/2"	32 3/8"	37 1/4"	58 1/8"	76 1/4"	94 1/4"

NOTE:

1. A DETAIL OF EACH EXIT PANEL IS REQUIRED IN THE PLAN SET.

REVISIONS								
NO.	DATE	BY	NO.	DATE	BY	NO.	DATE	BY

SCALES SHOWN ARE FOR 11" X 17" PRINTS ONLY

CADD FILE NAME: i13b1207.std

DRAWING DATE: DECEMBER, 2007

IDAHO TRANSPORTATION DEPARTMENT

BOISE IDAHO

ASSISTANT CHIEF ENGINEER (DEVELOPMENT)

CHIEF ENGINEER

STANDARD DRAWING

INTERSTATE EXIT NUMBER PANELS E1-5

English

STANDARD DRAWING NO.

I-13-B

SHEET 1 OF 1

PROFESSIONAL ENGINEER REGISTERED 5507 STATE OF IDAHO BRENT JENNINGS 12/11/07

TYPE I

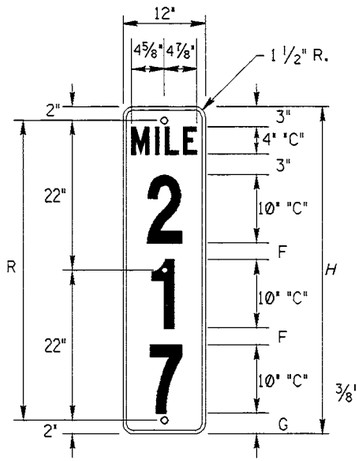

TYPE II AND III

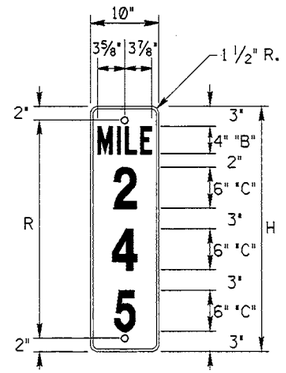

⅜"ϕ HOLES TYPICAL

	TYPE I			TYPE II AND III		
	MILE 2	MILE 2 4	MILE 2 4 5	MILE 2	MILE 2 5	MILE 2 4 5
ITD. NO.	D10-5	D10-6	D10-7	D10-1	D10-2	D10-3
SIZE	12"x24"	12"x36"	12"x48"	10"x18"	10"x27"	10"x36"
H	24"	36"	48"	18"	27"	36"
NO. OF HOLES	2	2	3	2	2	2
R HOLE SPACING	20"	32"	44"	14"	23"	32"
F	—	3"	2 1/2"	—	—	—
G	4"	3"	3"	—	—	—

MILEPOST PLATES

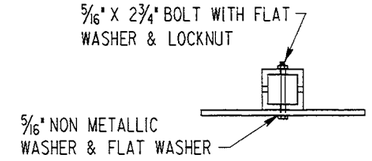

TYPE I & II MILEPOSTS

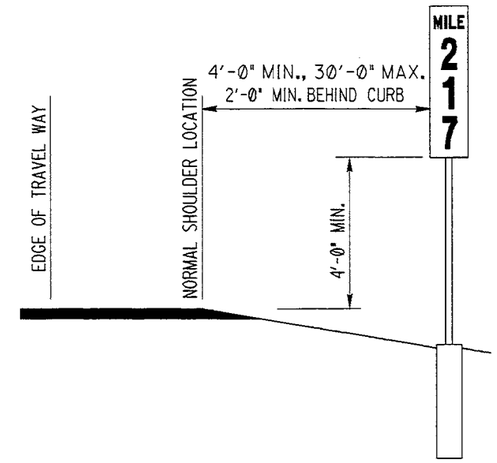

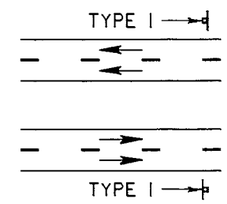

EXPRESSWAYS AND FREEWAYS

TYPICAL INSTALLATION

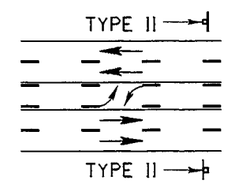

OTHER DIVIDED & UNDIVIDED MULTI-LANE HIGHWAYS

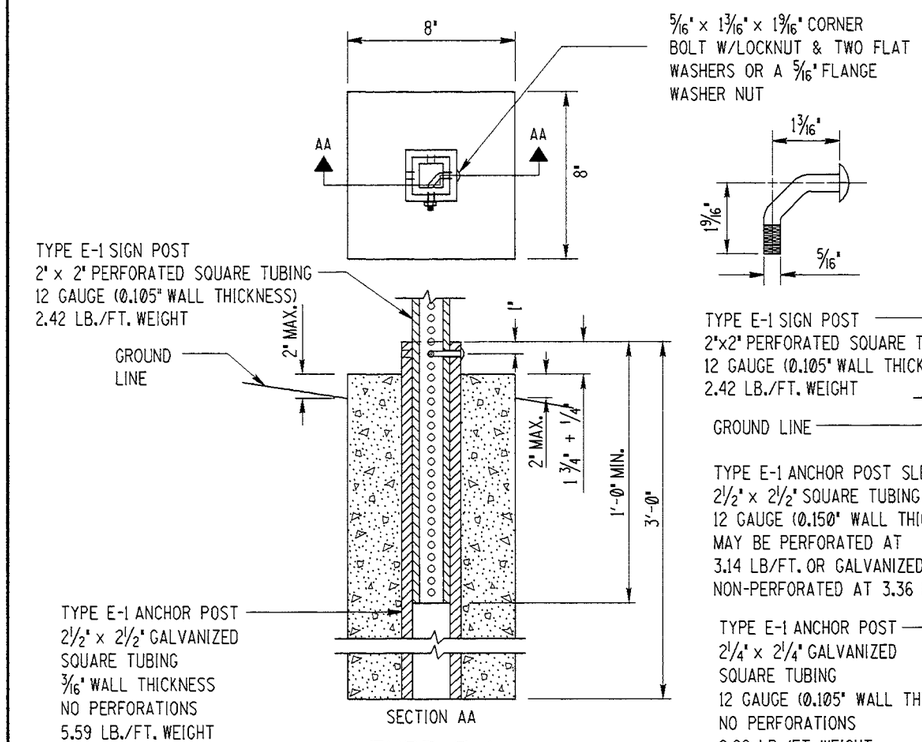

TYPE E-1
SIGN POST INSTALLATION DETAILS
WITH ONE PIECE ANCHOR POST

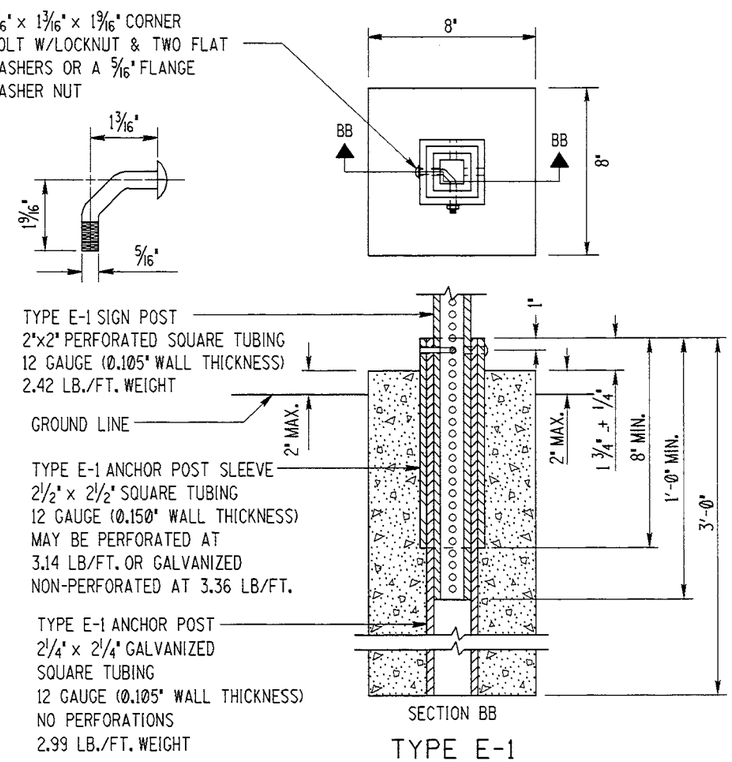

TYPE E-1
SIGN POST INSTALLATION DETAILS
WITH TWO PIECE ANCHOR POST

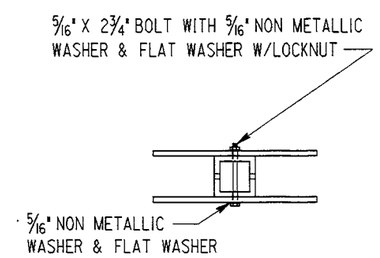

TYPE III MILEPOSTS

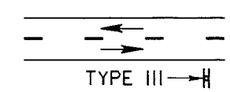

TWO LANE - TWO WAY HIGHWAYS

NOTES:

1. MILEPOST PLATES SHALL HAVE REFLECTORIZED GREEN BACKGROUND WITH WHITE REFLECTORIZED LETTERS, NUMBERS AND BORDER. THE NUMBERS SHALL HAVE CLASS 'B' REFLECTORIZED SHEETING.

2. MILEPOSTS SHALL BE INSTALLED ON BOTH SIDES OF ALL MULTILANE AND DIVIDED STATE HIGHWAYS. ON TWO LANE TWO WAY HIGHWAYS, TYPE III MILEPOSTS SHOULD BE INSTALLED ON THE RIGHT HAND SIDE OF THE ROAD IN THE DIRECTION OF ASCENDING MILE POSTS.

3. MILEPOSTS SHALL BE INSTALLED WITH EITHER PRECAST OR CAST IN PLACE 8" SQUARE CONCRETE FOUNDATIONS.

4. WHEN PRECAST FOUNDATIONS ARE USED, THE FOUNDATION HOLE MAY BE EXCAVATED TO DIMENSIONS LARGER THAN THE SQUARE CONCRETE FOUNDATION AND THEN BACKFILLED WITH APPROVED MATERIAL AND TAMPED.

5. IN SOLID ROCK, ANCHOR POSTS AND ANCHOR POST SLEEVES PROVIDING SPECIFIED MOUNTING HEIGHT MAY BE GROUTED INTO 4" MINIMUM DIAMETER BY 18" DEEP DRILLED HOLES.

6. MILEPOST PLATES SHALL NOT BE ATTACHED UNTIL THE CONCRETE HAS SET WHEN FOUNDATIONS ARE CAST IN PLACE.

7. TYPE E-1 FOUNDATIONS MAY BE CONSTRUCTED WITH EITHER THE ONE PIECE ANCHOR POST OR THE TWO PIECE ANCHOR POST.

8. CONCRETE FOR FOUNDATIONS SHALL BE CLASS '30'.

REVISIONS											
NO.	DATE	BY	NO.	DATE	BY	NO.	DATE	BY	NO.	DATE	BY
1	12-91	JEC									
2	12-94	HEB									
3	06-99	HEB									
4	12-01	NQB									

SCALES SHOWN ARE FOR 17" X 11" PRINTS ONLY

CADD FILE NAME: 120_1201.std

DRAWING ORIG. DATE: JULY, 1990

IDAHO TRANSPORTATION DEPARTMENT

BOISE, IDAHO

ASSISTANT CHIEF ENGINEER (DEVELOPMENT)

CHIEF ENGINEER

STANDARD DRAWING

MILEPOSTS

FORM CATALOG NUMBER

STANDARD DRAWING NO. I-20

SHEET 1 OF 1

PROFESSIONAL ENGINEER REGISTERED 7910 12-14-01 STATE OF IDAHO LANCE Z. JOHNSON

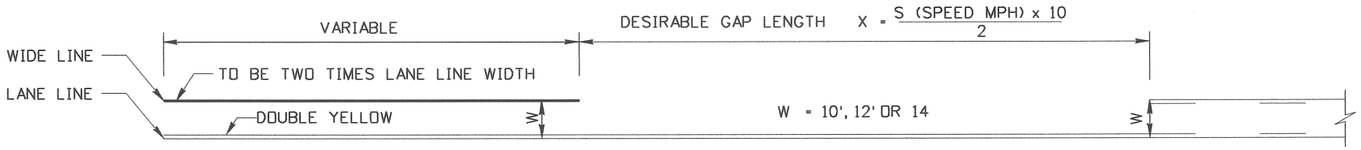

10', 12' AND 14' MEDIAN WIDTH

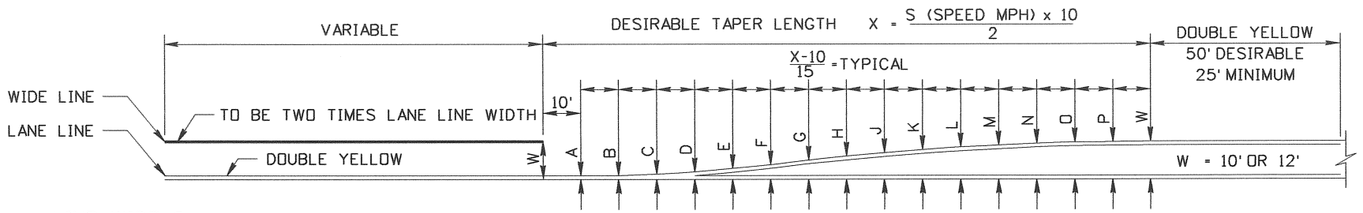

LINE WIDTHS:

LONGITUDINAL PAVEMENT MARKINGS (LANE LINES) HAVE A NORMAL LINE WIDTH OF 4, 5 OR 6 INCHES. WIDE LINES USED FOR EMPHASIS ARE A MINIMUM OF TWICE AS WIDE AS NORMAL LINES.

W	A	B	C	D	E	F	G	H	J	K	L	M	N	O	P	W
10.0'	.9'	1.0'	1.4'	2.0'	2.9'	3.9'	5.1'	6.1'	7.0'	7.8'	8.5'	9.0'	9.5'	9.8'	9.9'	10.0'
12.0'	.9'	1.1'	1.5'	2.2'	3.3'	4.6'	6.0'	7.3'	8.4'	9.3'	10.1'	10.8'	11.3'	11.7'	11.9'	12.0'

10' AND 12' MEDIAN WIDTH

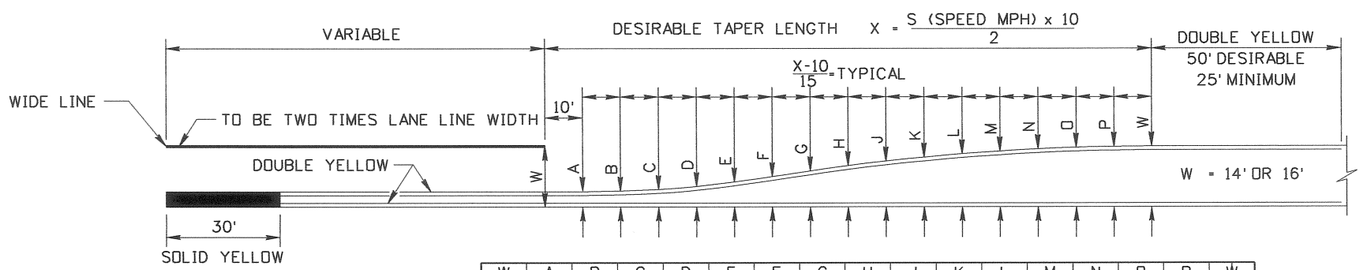

W	A	B	C	D	E	F	G	H	J	K	L	M	N	O	P	W
14.0'	3.0'	3.1'	3.6'	4.3'	5.3'	6.7'	8.1'	9.3'	10.4'	11.4'	12.2'	12.8'	13.3'	13.7'	13.9'	14.0'
16.0'	4.0'	4.2'	4.6'	5.4'	6.6'	8.0'	9.5'	10.9'	12.1'	13.1'	14.0'	14.7'	15.3'	15.7'	15.9'	16.0'

14' AND 16' MEDIAN WIDTH

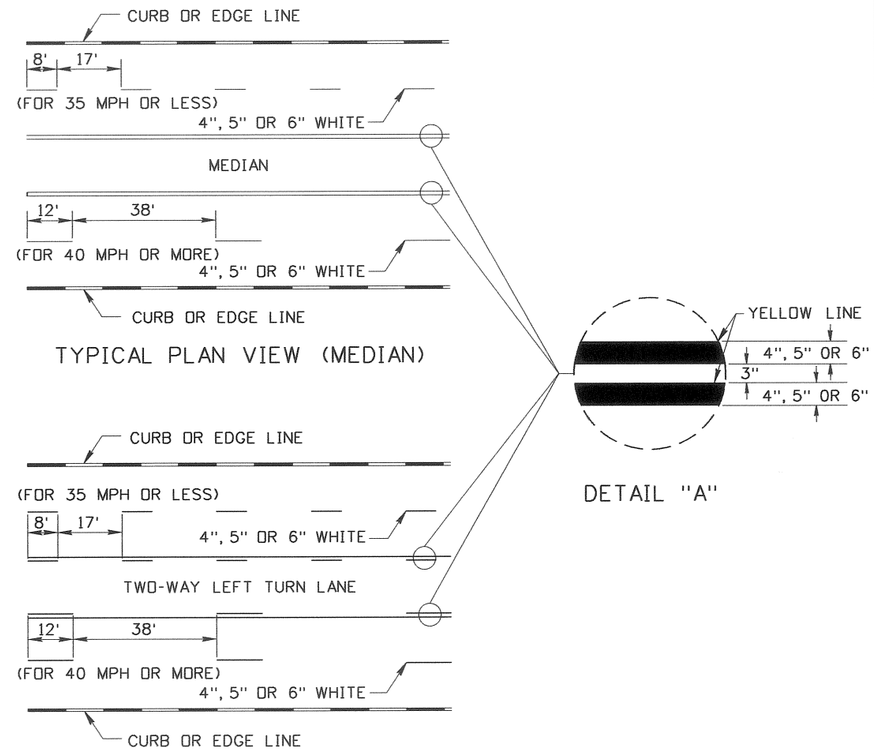

TYPICAL PLAN VIEW (MEDIAN)

DETAIL "A"

TYPICAL PLAN VIEW (TWO-WAY LEFT TURN LANE)

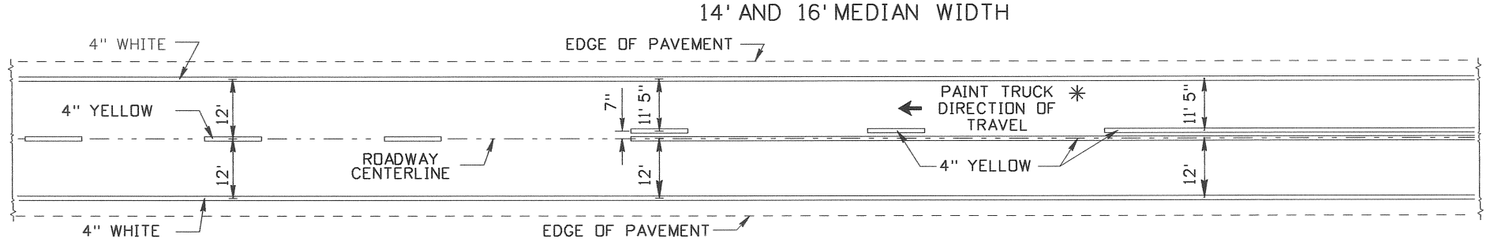

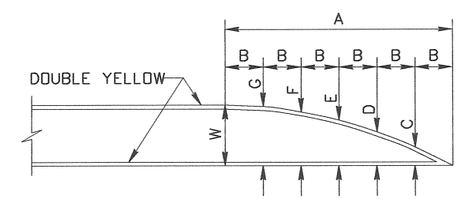

W	A	B	C	D	E	F	G
10.0'	60.0'	10.0'	3.1'	5.6'	7.5'	8.9'	9.7'
12.0'	60.0'	10.0'	3.7'	6.7'	9.0'	10.7'	11.7'
14.0'	60.0'	10.0'	4.3'	7.8'	10.5'	12.4'	13.6'
16.0'	60.0'	10.0'	4.9'	8.9'	12.0'	14.2'	15.6'

OFFSET NOSE
(OPTIONAL)

✳ PAINT TRUCK SETUP

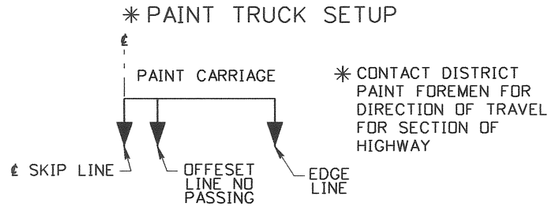

✳ CONTACT DISTRICT PAINT FOREMEN FOR DIRECTION OF TRAVEL FOR SECTION OF HIGHWAY

DIMENSION LAYOUT FOR 12' LANE WIDTHS

SEE TABLE BELOW FOR LANE WIDTHS LESS THAN 12'

SECTION WIDTH FEET	DISTANCE FROM CL TO EDGE LINE FEET
20.0'	9.5'
22.0'	10.5'
24.0'	11.5'
26.0' & WIDER	12.0'

NOTES:

1. STANDARD LANE LINE WIDTH IS 4".

REVISIONS									
NO.	DATE	BY	NO.	DATE	BY	NO.	DATE	BY	
1	12-01	NOB							
2	07-03	HEB							
3	12-04	HEB							
4	05-05	HEB							
5	07-10	HEB							

SCALES SHOWN ARE FOR 11" X 17" PRINTS ONLY

CADD FILE NAME: i21a0710.std

DRAWING DATE: DECEMBER, 1993

IDAHO TRANSPORTATION DEPARTMENT

BOISE IDAHO

ASSISTANT CHIEF ENGINEER (DEVELOPMENT)

CHIEF ENGINEER

STANDARD DRAWING

STANDARD PAVEMENT MARKINGS FOR ARTERIAL AND COLLECTOR ROADWAYS

English

STANDARD DRAWING NO.

I-21-A

SHEET 1 OF 1

PROFESSIONAL ENGINEER REGISTERED 6260 7/12/10 STATE OF IDAHO CARL D. MAIN

LINE WIDTHS:

NORMAL LONGITUDINAL LANE LINES ARE 4 TO 6 INCHES WIDE.
CHANNELIZATION LINES ARE A MINIMUM OF TWICE AS WIDE AS LANE LINES.

NOTES:

1. PAVEMENT MARKINGS WHICH WOULD FALL ON LONGITUDINAL JOINTS SHOULD BE PLACED AS FOLLOWS:

   THE RIGHT EDGE LINE AND CENTER BROKEN LANE LINE (SKIP LINE) SHOULD BE OFFSET 4 INCHES TO THE LEFT SIDE OF LONGITUDINAL JOINTS IN THE DIRECTION OF TRAFFIC FLOW.

   THE LEFT EDGE LINE SHOULD BE OFFSET 4 INCHES TO THE RIGHT OF A LONGITUDINAL JOINT.

2. THE OFFSET SHOULD APPLY TO LONGITUDINAL JOINTS IN CONCRETE PAVEMENT AND TO THE LONGITUDINAL JOINTS OR MEET LINES OF ASPHALT PAVEMENTS WHEN THESE ARE VISUALLY APPARENT.

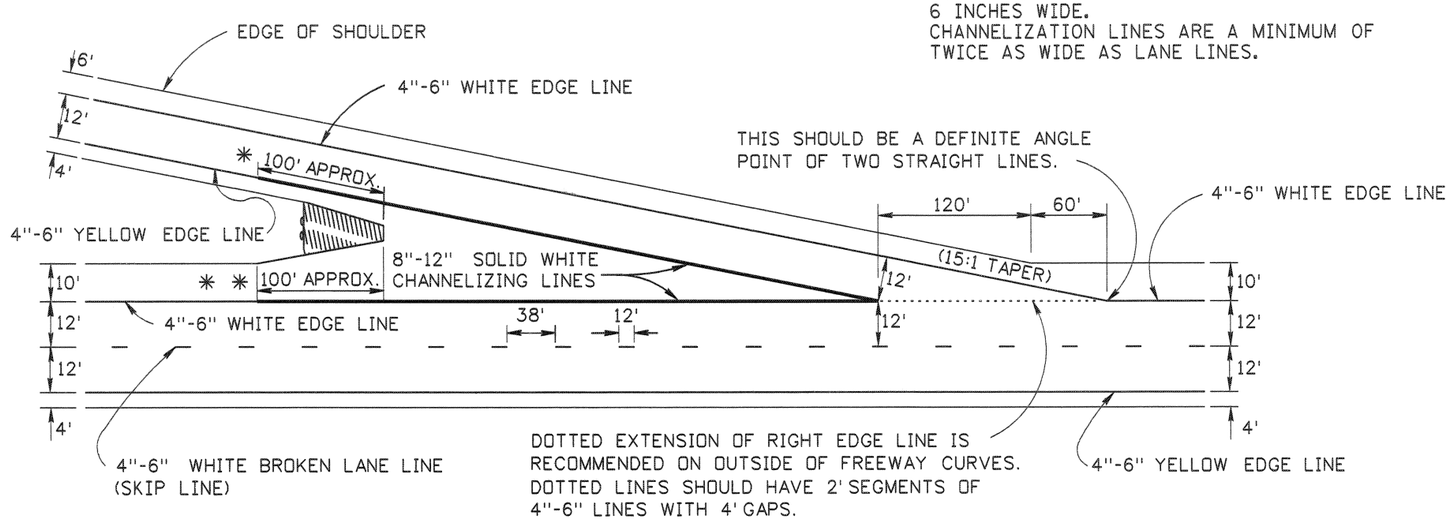

TAPERED DECELERATION LANE

TYPICAL 22' WIDE RAMP

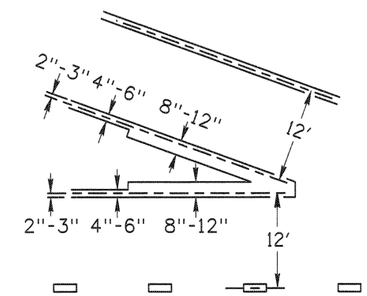

TYPICAL DIMENSIONS FOR PAINTED GORE

NOTE: ALL MEASUREMENTS GIVEN ARE TO THE CENTER OF THE 4"-6" LINES.
8"-12" CHANNELIZING LINES ARE OFFSET AS SHOWN.

* LINE CHANGES FROM 4"-6" YELLOW EDGE LINE TO 8"-12" SOLID WHITE CHANNELIZING LINE.

** LINE CHANGES FROM 4"-6" WHITE EDGE LINE TO 8"-12" WIDE CHANNELIZING LINE.

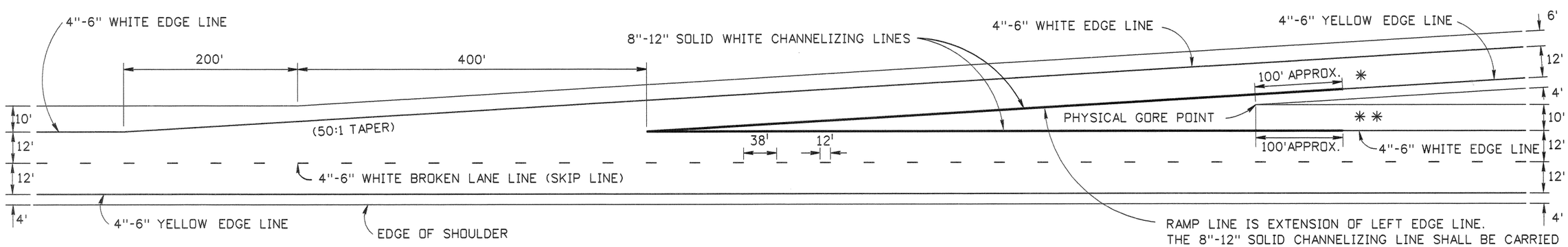

TAPERED ACCELERATION LANE

TYPICAL 22' WIDE RAMP

REVISIONS								
NO.	DATE	BY	NO.	DATE	BY	NO.	DATE	BY
1	12-01	NQB						
2	05-05	HEB						

SCALES SHOWN ARE FOR 11" X 17" PRINTS ONLY

CADD FILE NAME 122a0505.std

DRWG. ORIG. DATE: FEBRUARY, 1991

IDAHO TRANSPORTATION DEPARTMENT

BOISE IDAHO

ASSISTANT CHIEF ENGINEER (DEVELOPMENT)

CHIEF ENGINEER

STANDARD DRAWING

STANDARD PAVEMENT MARKINGS FREEWAYS WITH 22 FOOT WIDE RAMPS

English

STANDARD DRWG. NO.

I-22-A

SHEET 1 OF 1

PROFESSIONAL ENGINEER REGISTERED 7910 5-26-05 STATE OF IDAHO LANCE Z. JOHNSON

LINE WIDTHS:

NORMAL LONGITUDINAL LANE LINES ARE 4 TO 6 INCHES WIDE.
CHANNELIZATION LINES ARE A MINIMUM OF TWICE AS WIDE AS LANE LINES.

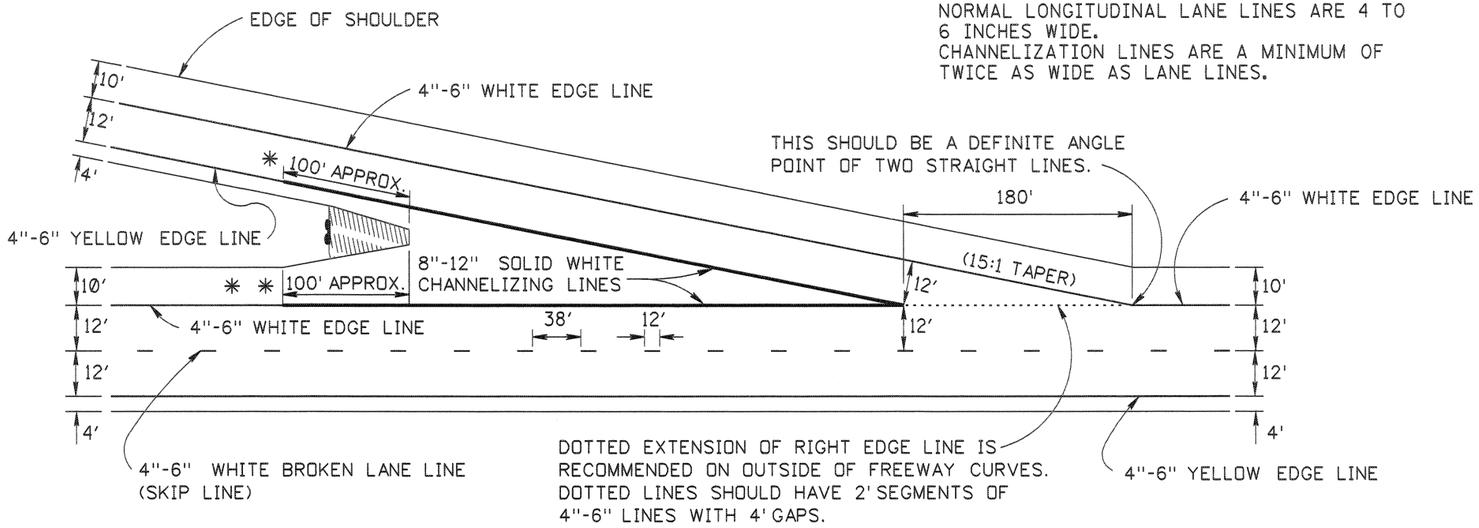

TAPERED DECELERATION LANE

TYPICAL FOR 26' WIDE RAMPS

* LINE CHANGES FROM 4"-6" YELLOW EDGE LINE TO 8"-12" SOLID WHITE CHANNELIZING LINE.

** LINE CHANGES FROM 4"-6" WHITE EDGE LINE TO 8"-12" WIDE CHANNELIZING LINE.

NOTES:

1. PAVEMENT MARKINGS WHICH WOULD FALL ON LONGITUDINAL JOINTS SHOULD BE PLACED AS FOLLOWS:

   THE RIGHT EDGE LINE AND CENTER BROKEN LANE LINE (SKIP LINE) SHOULD BE OFFSET 4 INCHES TO THE LEFT SIDE OF LONGITUDINAL JOINTS IN THE DIRECTION OF TRAFFIC FLOW.

   THE LEFT EDGE LINE SHOULD BE OFFSET 4 INCHES TO THE RIGHT OF A LONGITUDINAL JOINT.

2. THE OFFSET SHOULD APPLY TO LONGITUDINAL JOINTS IN CONCRETE PAVEMENT AND TO THE LONGITUDINAL JOINTS OR MEET LINES OF ASPHALT PAVEMENTS WHEN THESE ARE VISUALLY APPARENT.

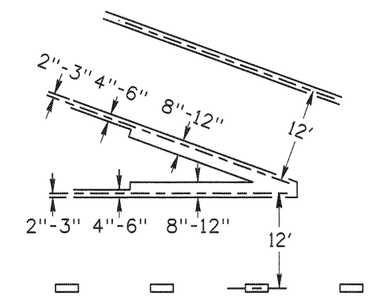

TYPICAL DIMENSIONS FOR PAINTED GORE

NOTE: ALL MEASUREMENTS GIVEN ARE TO THE CENTER OF THE 4" LINES.
8" CHANNELIZING LINES ARE OFFSET AS SHOWN.

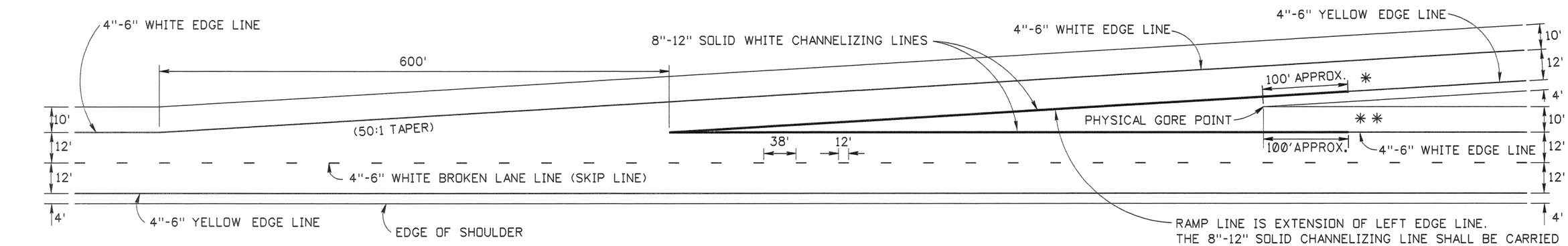

TAPERED ACCELERATION LANE

TYPICAL FOR 26' WIDE RAMPS

REVISIONS								
NO.	DATE	BY	NO.	DATE	BY	NO.	DATE	BY
1	12-01	NQB						
2	05-05	HEB						

SCALES SHOWN ARE FOR 11" X 17" PRINTS ONLY

CADD FILE NAME 122b0505.std

DRWG. ORIG. DATE: FEBRUARY, 1991

IDAHO TRANSPORTATION DEPARTMENT

BOISE IDAHO

P. L. Thomas
ASSISTANT CHIEF ENGINEER (DEVELOPMENT)

Steve C. Hutchinson
CHIEF ENGINEER

STANDARD DRAWING

STANDARD PAVEMENT MARKINGS FREEWAYS WITH 26 FOOT WIDE RAMPS

English

STANDARD DRWG. NO.

I-22-B

SHEET 1 OF 1

PROFESSIONAL ENGINEER REGISTERED 7910 5-26-05 STATE OF IDAHO LANCE Z. JOHNSON

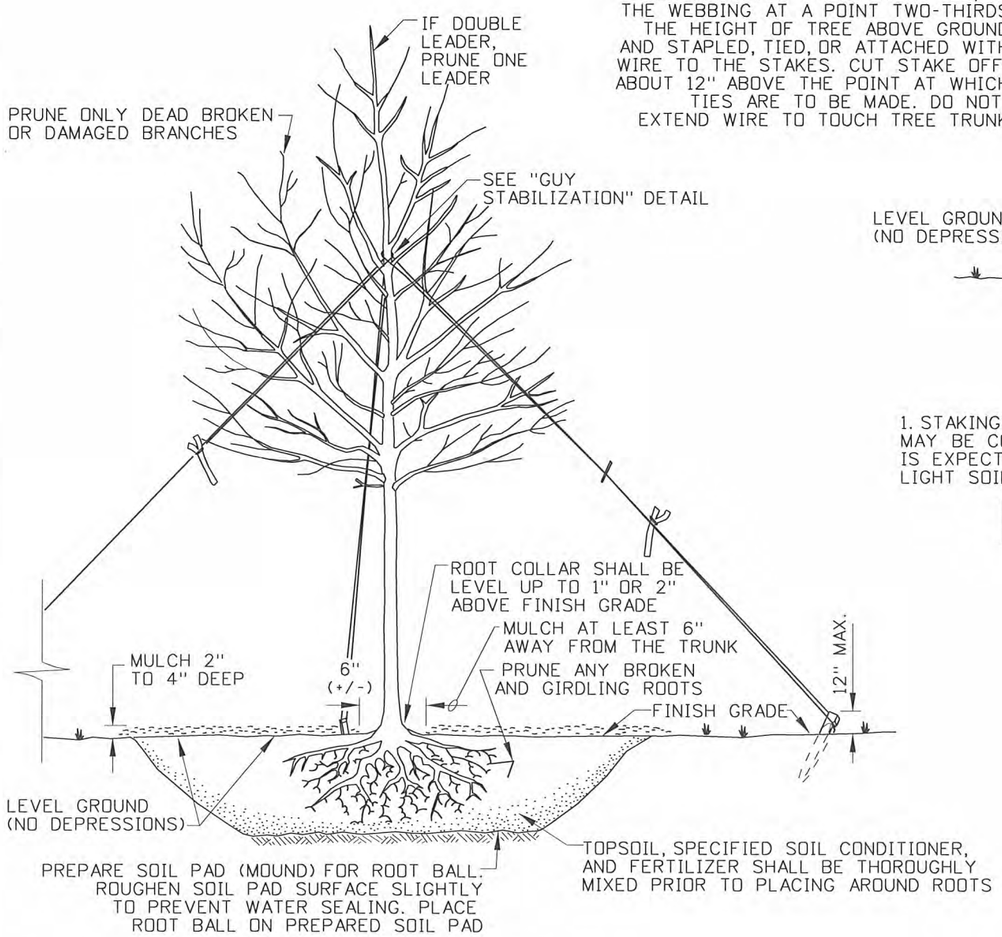

NOTES

1. PLACE ROOTS IN NATURAL POSITION, WORK TOPSOIL CAREFULLY AROUND ROOTS, AND SOAK THE TOPSOIL AROUND THE ROOTS BY POURING WATER OVER SOIL SURFACE UNTIL ALL VOIDS ARE COMPLETELY SATURATED AND FILLED. WATER AFTER PLANTING THEN FILL IN SETTLED AREAS.
2. FILL HOLE TWO-THIRDS FULL, ADD WATER TO SETTLE SOIL, THEN ADD REMAINDER OF SOIL AND WATER TO FILL IN VOIDS.
3. THIS METHOD OF PLANTING BARE ROOT TREES APPLIES TO DECIDUOUS TREES AND SHRUBS OF 12' AND GREATER HEIGHT.

LARGE BARE ROOT TREES & SHRUBS

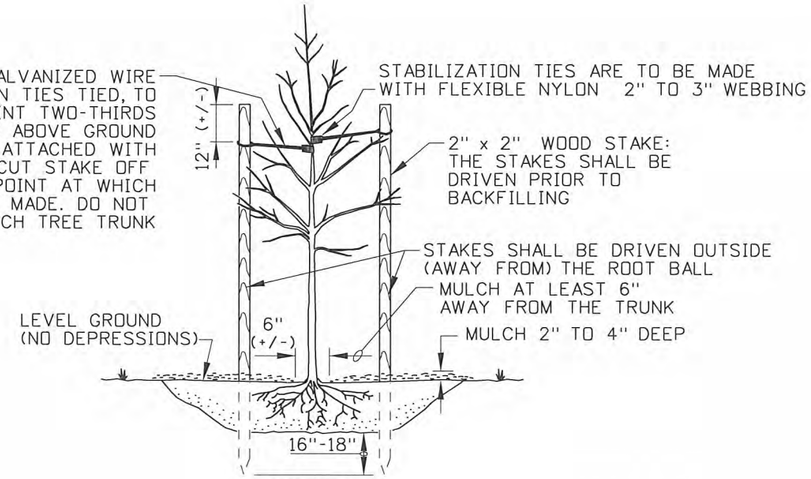

NOTES

1. STAKING IS NOT RECOMMENDED AS A ROUTINE PRACTICE BUT MAY BE CONSIDERED IN WINDY AREAS, AREAS WHERE VANDALISM IS EXPECTED, OR WHEN PLANTING LARGE BARE ROOT TREES IN LIGHT SOIL.

METHOD OF STAKING DECIDUOUS TREES SMALLER THAN 3" CALIPER

SMALL TREES

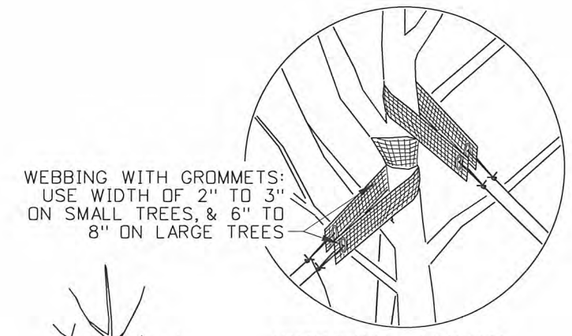

WEBBING DETAIL

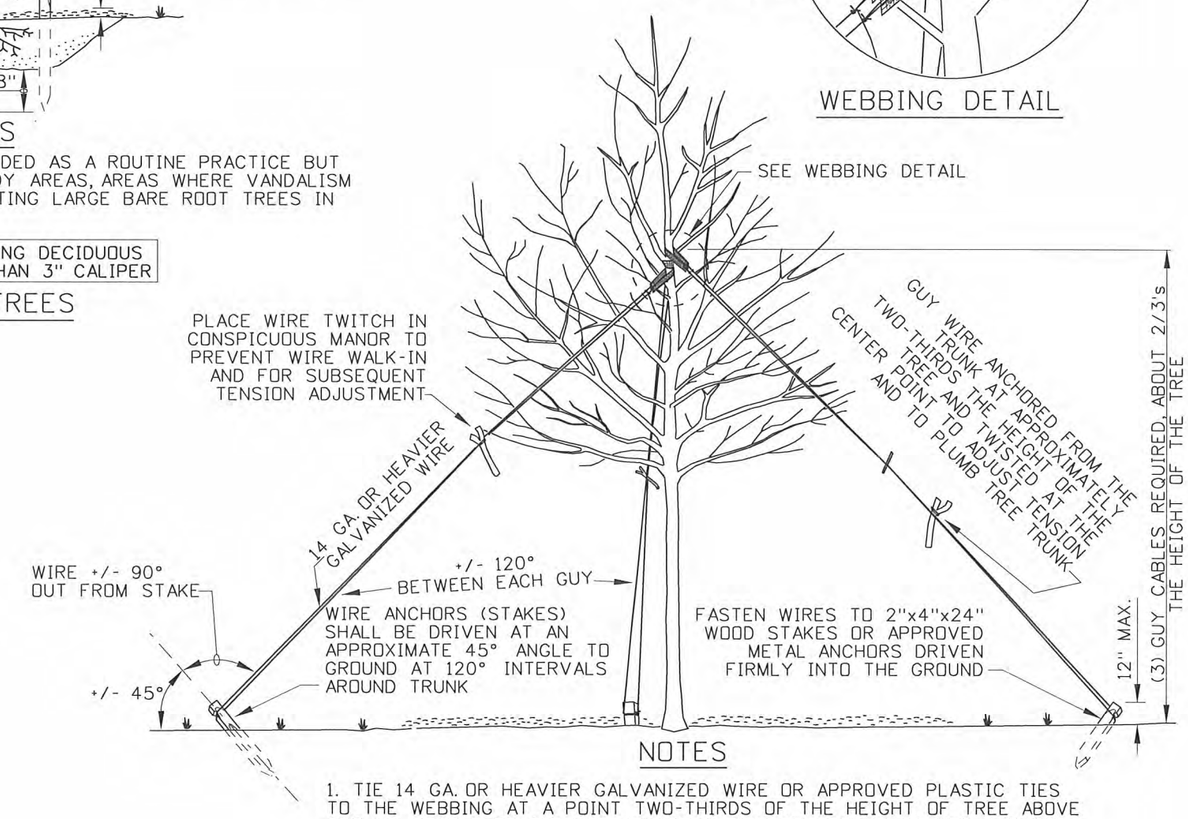

NOTES

1. TIE 14 GA. OR HEAVIER GALVANIZED WIRE OR APPROVED PLASTIC TIES TO THE WEBBING AT A POINT TWO-THIRDS OF THE HEIGHT OF TREE ABOVE GROUND. STAPLE OR TIE WIRE/PLASTIC TIES TO GROUND STAKES AND CUT STAKES OFF ABOUT 12" ABOVE THE POINT AT WHICH TIES ARE TO BE MADE.

METHOD OF PLANTING BARE ROOT TREES & SHRUBS & METHOD OF GUYING DECIDUOUS TREES LARGE THAN 3" CALIPER

GUY STABILIZATION

REVISIONS

NO.	DATE	BY	NO.	DATE	BY	NO.	DATE	BY
1	6-71							
2	10-73							
3	9-94	MSM						
4	5-05	MSM						
5	10-2010	KEH						

SCALES SHOWN ARE FOR 11" X 17" PRINTS ONLY

CADD FILE NAME: k7__1010.std

DRAWING DATE: SEPTEMBER, 1966

IDAHO TRANSPORTATION DEPARTMENT

BOISE IDAHO

ASSISTANT CHIEF ENGINEER (DEVELOPMENT)

CHIEF ENGINEER

STANDARD DRAWING

METHODS OF PLANTING TREES AND SHRUBS

REQUIRES SHEET 2 OF 2

English

STANDARD DRAWING NO. K-7

SHEET 1 OF 2

PROFESSIONAL ENGINEER LICENSED Karissa Hardy 14025 10·27·2010 STATE OF IDAHO KARISSA HARDY

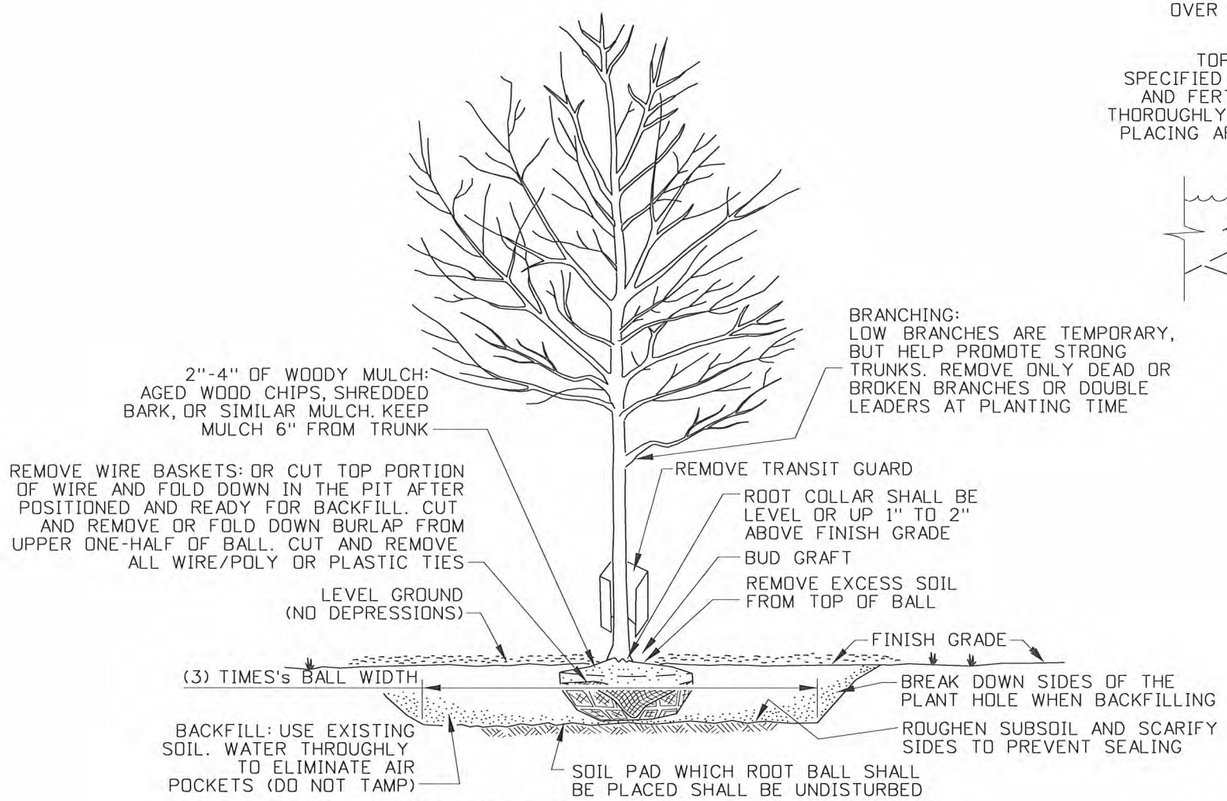

LARGE TO MEDIUM BALLED/WRAPPED TREES

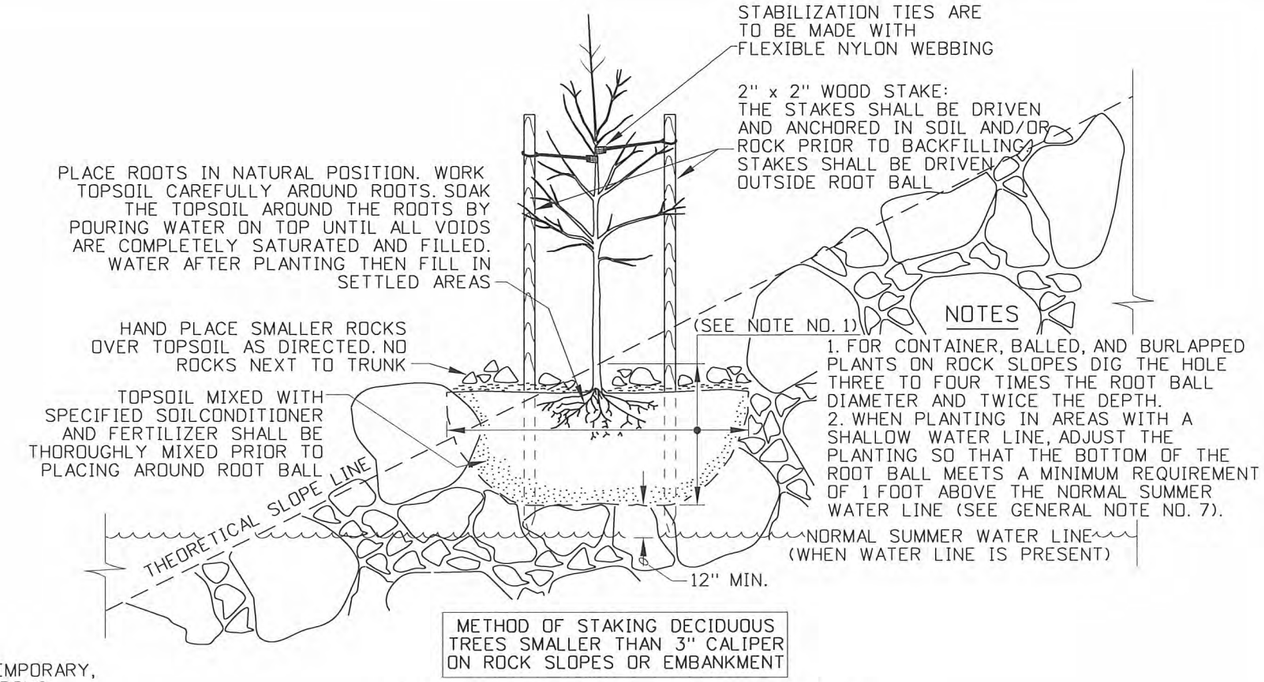

NOTES

1. FOR CONTAINER, BALLED, AND BURLAPPED PLANTS ON ROCK SLOPES DIG THE HOLE THREE TO FOUR TIMES THE ROOT BALL DIAMETER AND TWICE THE DEPTH.
2. WHEN PLANTING IN AREAS WITH A SHALLOW WATER LINE, ADJUST THE PLANTING SO THAT THE BOTTOM OF THE ROOT BALL MEETS A MINIMUM REQUIREMENT OF 1 FOOT ABOVE THE NORMAL SUMMER WATER LINE (SEE GENERAL NOTE NO. 7).

METHOD OF STAKING DECIDUOUS TREES SMALLER THAN 3" CALIPER ON ROCK SLOPES OR EMBANKMENT

SMALL TREES ON ROCK SLOPES

GENERAL NOTES

1. USE STAKES ONLY WHEN NECESSARY. OTHERWISE STABILIZE TREE AS SHOWN IN "GUY STABILIZATION" DETAIL.

2. THE WOOD STAKES CAN BE ROUGH OR PLANED, HOWEVER STAKES SHALL BE MADE FROM CONSTRUCTION GRADE LUMBER FREE OF KNOTS AND CHECKS.

3. TO PREVENT INJURY TO BARK WIRE TIE ENDS SHALL BE ATTACHED THROUGH GROMMETS SECURED IN 2" TO 3" WIDE STRIPS FOR SMALL TREES & 6" TO 8" WIDE STRIPS FOR LARGE TREES, MADE OF NYLON OR APPROVED WEBBING (SEE "GUY STABILIZATION" & "WEBBING DETAIL").

4. TREES SHALL NOT BE PLANTED WITHIN THE CLEAR ZONE.

5. CONTAINER, BALLED, AND BURLAPPED TREES UNDER FOUR FEET SHALL NOT BE STAKED.

6. ALL TREE STAKES AND WIRE/POLY TIES SHALL BE REMOVED ONE GROWING SEASON AFTER PLANTING.

7. ALL CONIFERS SHALL BE BALLED AND BURLAPPED USING AMERICAN NURSERY ASSOCIATION STANDARD. ALL TREES AND SHRUBS SHALL CONFORM TO ANSI Z 60.1 - 1996 REQUIREMENTS.

8. WHEN SMALL TREES ARE PLANTED ON A DRY ROCK SLOPE IGNORE THE SUMMER WATER LINE REQUIREMENTS.

9. NOT TO SCALE.

REVISIONS

NO.	DATE	BY	NO.	DATE	BY	NO.	DATE	BY
1	6-71							
2	10-73							
3	9-94	MSM						
4	5-05	MSM						
5	10-2010	KEH						

SCALES SHOWN ARE FOR 11" X 17" PRINTS ONLY

CADD FILE NAME: k7__1010.std

DRAWING DATE: SEPTEMBER, 1966

IDAHO TRANSPORTATION DEPARTMENT

BOISE IDAHO

ASSISTANT CHIEF ENGINEER (DEVELOPMENT)

CHIEF ENGINEER

STANDARD DRAWING

METHODS OF PLANTING TREES AND SHRUBS

REQUIRES SHEET 1 OF 2

English

STANDARD DRAWING NO.

K-7

SHEET 2 OF 2

PROFESSIONAL ENGINEER LICENSED Karissa Hardy 14025 10-27-2010 STATE OF IDAHO KARISSA HARDY

REST AREA AND ROADSIDE FACILITIES

- TABLE AND ARBOR
- PICNIC TABLES (MOVABLE)
- PICNIC TABLES (STATIONARY)
- SITTING BENCH
- TOILET BUILDING
- INFORMATION PANEL
- TELEPHONE (T)
- TRAVEL TRAILER SANITARY UNIT
- LITTER BARREL
- INCINERATOR WITH BARRIER
- FIREPLACE OR GRILL
- WELL (W)
- WATER PUMP
- CHECK VALVE SPRING LOADED
- FLOW REGULATOR
- FLOW SWITCH FOR HYPO-CHLORINATOR (S)
- HYPO-CHLORINATOR (H)
- PROPOSED CONNECTION (TEE)
- DRINKING FOUNTAIN
- HYDRANT

SPRINKLER SYSTEM

- FLOOD (BUBBLER, STREAM OR SPIDER)
- FULL CIRCLE SHRUBBERY SPRAY
- HALF CIRCLE SHRUBBERY SPRAY
- QUARTER CIRCLE SHRUBBERY SPRAY
- CENTER STRIP SHRUBBERY SPRAY
- END STRIP SHRUBBERY SPRAY
- FULL CIRCLE ABOVE GROUND ROTARY SPRINKLER
- PART CIRCLE ABOVE GROUND ROTARY SPRINKLER
- FULL CIRCLE POP-UP ROTARY SPRINKLER
- PART CIRCLE POP-UP ROTARY SPRINKLER
- QUICK-COUPLING VALVE
- REMOTE CONTROL VALVE
- MANUAL CONTROL VALVE
- COMBINATION PRESSURE REDUCING REMOTE CONTROL VALVE
- PRESSURE REDUCING VALVE
- MASTER REMOTE CONTROL VALVE (M)
- AUTOMATIC SPRINKLER CONTROLLER (C)
- ATMOSPHERIC VACUUM (V)
- PRESSURE VACUUM BREAKER (V)
- MANUAL DRAIN VALVE
- AUTOMATIC DRAIN VALVE

SPRINKLER SYSTEM CON'T.

- GATE VALVE (G)
- COMPRESSOR COUPLING
- MASTER CONTROL VALVE (M)
- MOISTURE SENSOR
- AUTOMATIC STOP FLOW VALVE

TREE & SHRUB SYMBOLS

	EXISTING	PROPOSED
SINGLE DECIDUOUS TREE	A	A
MASS DECIDUOUS TREES	B B A A	B B B A
SINGLE CONIFER TREE	A	A
MASS CONIFER TREES	P P S S	P P S S
MASS SHRUBS		
SINGLE SHRUB	D	D
PLANTING BEDS ON PLANTING PLANS	NO., BOTANICAL NAME & SPACING / NO., BOTANICAL NAME & SPACING	

THIS DRAWING DOES NOT REQUIRE AN ENGINEERS STAMP.

REVISIONS											
NO.	DATE	BY	NO.	DATE	BY	NO.	DATE	BY	NO.	DATE	BY
1	7-92	MSM									
2	12-02	MSM									

SCALES SHOWN ARE FOR 17" X 11" PRINTS ONLY

CADD FILE NAME: k10_1202.std

DRAWING ORIG. DATE: JULY, 1992

IDAHO TRANSPORTATION DEPARTMENT

BOISE, IDAHO

ASSISTANT CHIEF ENGINEER (DEVELOPMENT)

CHIEF ENGINEER

STANDARD DRAWING

REST AREA & ROADSIDE FACILITIES SYMBOLS

FORM CATALOG NUMBER

STANDARD DRAWING NO. K-10

SHEET 1 OF 1

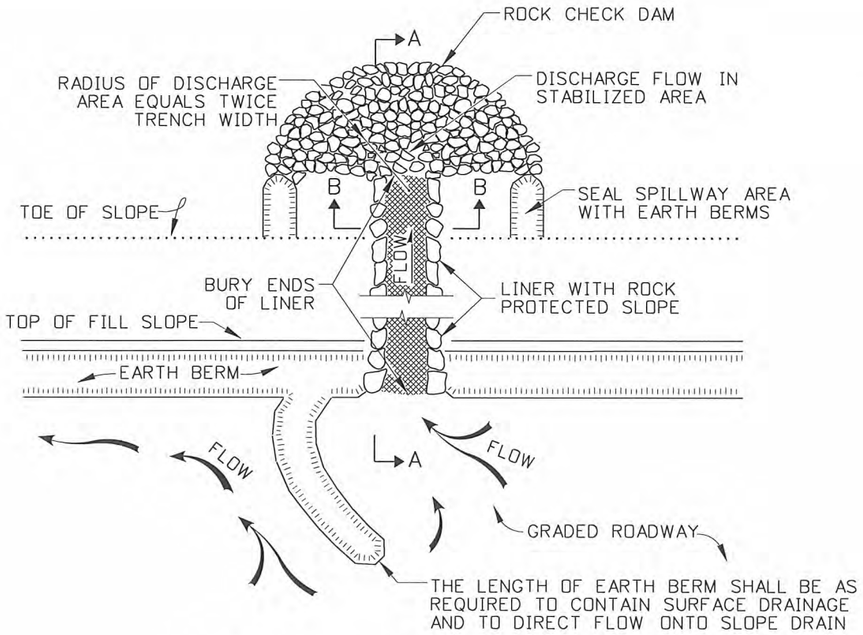

TO BE USED WITH 4:1 SLOPE OR FLATTER

PLAN - FILL SLOPE DRAIN (LINER)

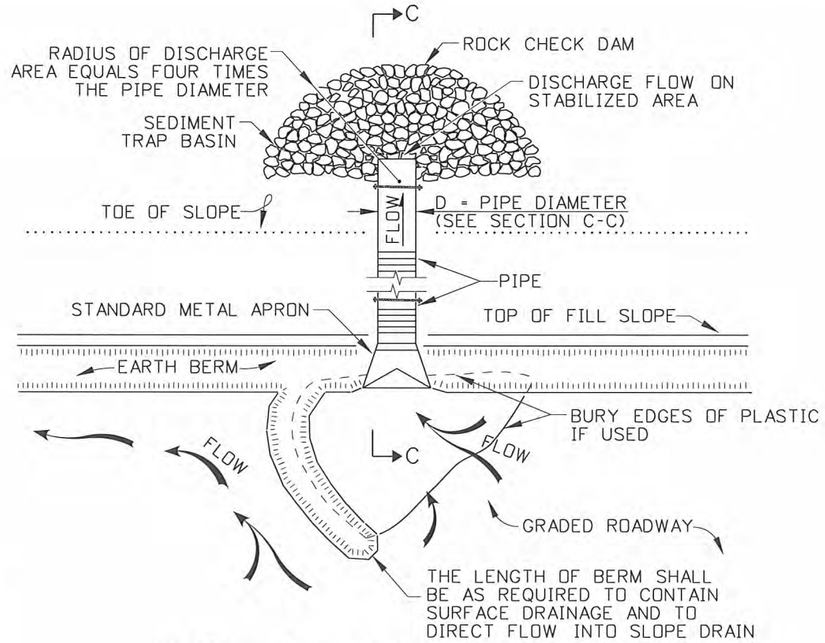

PLAN - FILL SLOPE DRAIN (PIPE)

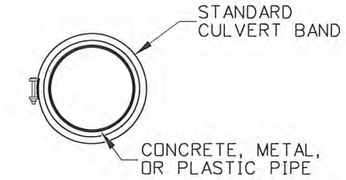

PIPE CONNECTION DETAIL

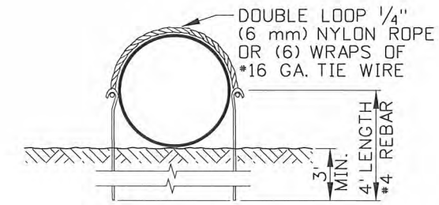

REPEAT PIPE ANCHORING UNTIL PIPE IS STABLE

PIPE ANCHOR DETAIL

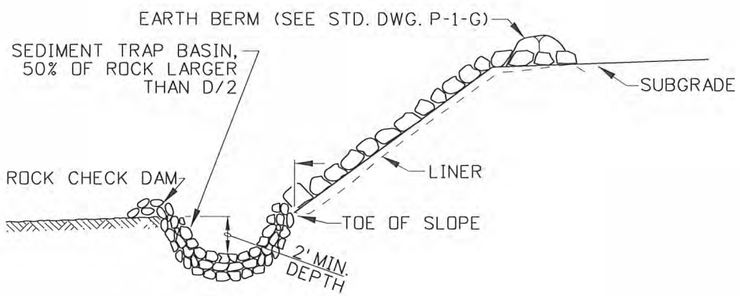

SECTION A-A

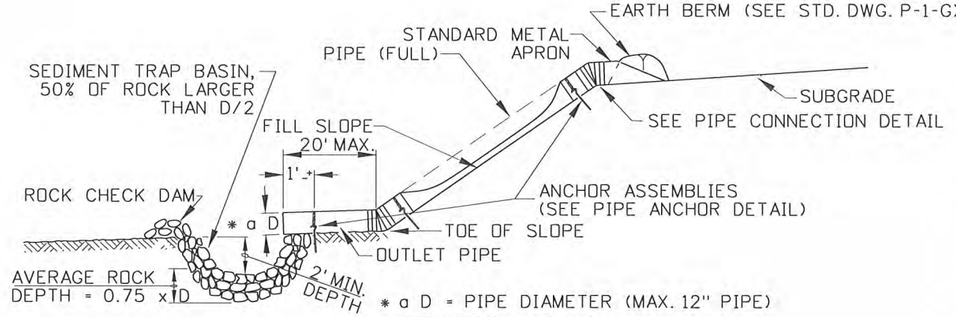

SECTION C-C

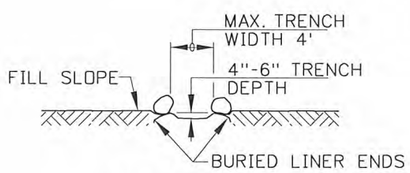

SECTION B-B

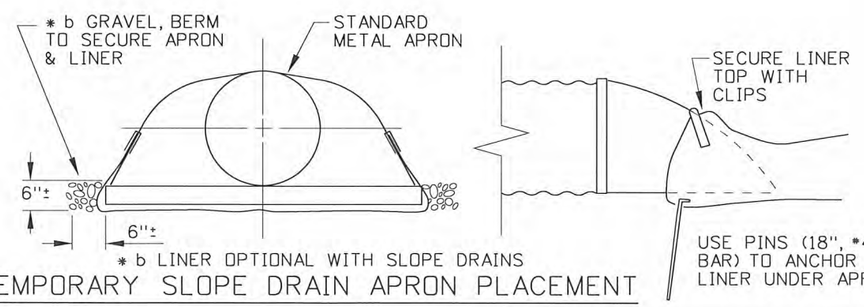

* b LINER OPTIONAL WITH SLOPE DRAINS

TEMPORARY SLOPE DRAIN APRON PLACEMENT

NOTES

1. THE GENERAL NOTES FOR ALL P-1 SERIES STANDARD DRAWINGS (TEMPORARY EROSION CONTROL) ARE GIVEN ON STANDARD DRAWING P-1-D (TEMPORARY EROSION CONTROL DIVERSION DEVICES & SITE EXAMPLE).

2. SLOPE DRAINS SHALL BE PLACED ON UNDISTURBED SOIL OR WELL COMPACTED FILL AND LOCATED AS SHOWN ON THE PLANS.

3. THE SLOPE DRAIN SIZE IS TO BE DETERMINED BY STORM DESIGN.

4. SLOPE DRAINS ARE TO BE CHECKED PERIODICALLY FOR DAMAGE, DEBRIS, AND FREEZING OF PLASTIC SIDES. PLACE ANCHORS AS NEEDED TO SECURE THE FLEXIBLE DOWNDRAIN.

5. LINERS MAY CONSIST OF PLASTIC SHEETING, EROSION CONTROL GEOTEXTILES, OR APPROVED TURF REINFORCED MAT (TRM).

6. WHEN TEMPORARY EROSION CONTROL SLOPE DRAINS ARE LEFT IN PLACE PAST FINAL ACCEPTANCE, APPROPRIATE TRAFFIC SAFETY MEASURES SHALL BE IMPLEMENTED.

7. NOT TO SCALE.

REVISIONS								
NO.	DATE	BY	NO.	DATE	BY	NO.	DATE	BY
1	9-93	MSM						
2	6-96	GFK						
3	10-2010	KEH						

SCALES SHOWN ARE FOR 11" X 17" PRINTS ONLY

CADD FILE NAME: p1a_1010.std

DRAWING DATE: APRIL, 1993

IDAHO TRANSPORTATION DEPARTMENT

BOISE IDAHO

ASSISTANT CHIEF ENGINEER (DEVELOPMENT)

CHIEF ENGINEER

STANDARD DRAWING

TEMPORARY EROSION CONTROL INLET/OUTLET

REQUIRES STD. DWG. P-1-D & P-1-E

English

STANDARD DRAWING NO.

P-1-A

SHEET 1 OF 1

PROFESSIONAL ENGINEER LICENSED 14025 10-27-2010 STATE OF IDAHO KARISSA HARDY

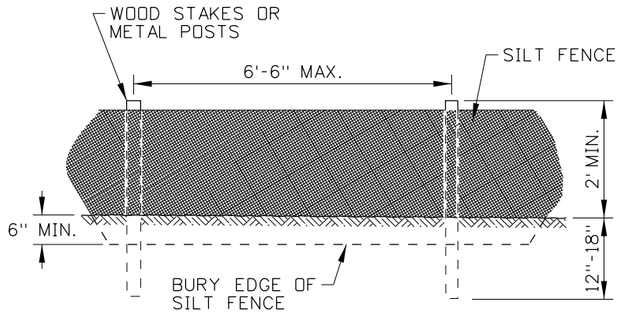

SILT FENCE (NO WIRE BACKING)

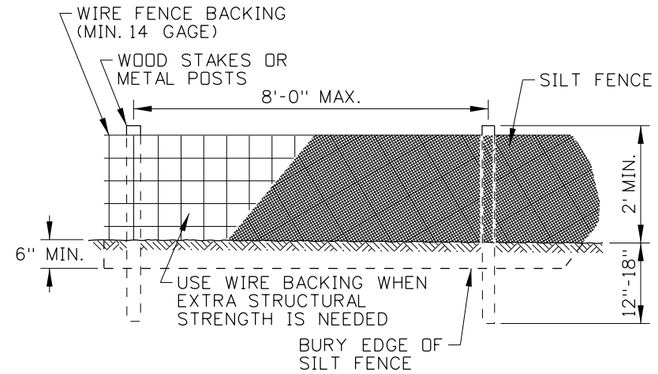

SILT FENCE (WIRE BACKING)

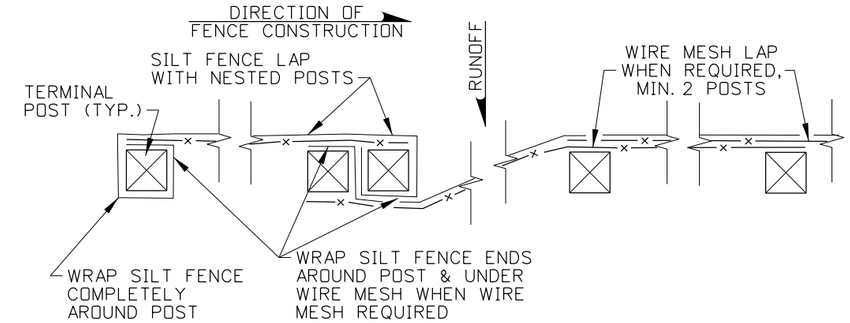

SILT FENCE LAP DETAIL

FIBER WATTLE & COMPOST SOCK SPACING TABLE				
SLOPE	WATTLE SIZE			
	6"	9"	12"	20"
1:1	5 FT	10 FT	15 FT	20 FT
2:1	10 FT	20 FT	30 FT	40 FT
3:1	15 FT	30 FT	45 FT	60 FT
4:1 OR FLATTER	20 FT	40 FT	60 FT	80 FT

SILT FENCE SPACING TABLE			
SLOPE	SOIL TYPE		
	SILTY	CLAYS	SANDY
1:1	50 FT	75 FT	100 FT
2:1	75 FT	100 FT	125 FT
4:1	100 FT	125 FT	150 FT
10:1 OR FLATTER	125 FT	150 FT	200 FT

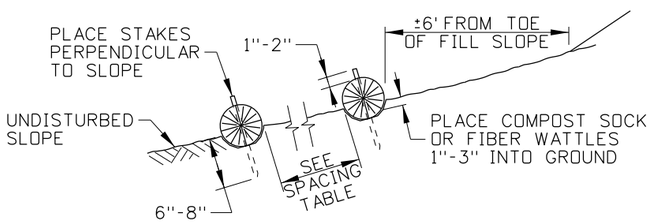

COMPOST SOCK AND FIBER WATTLE

SIDE VIEW

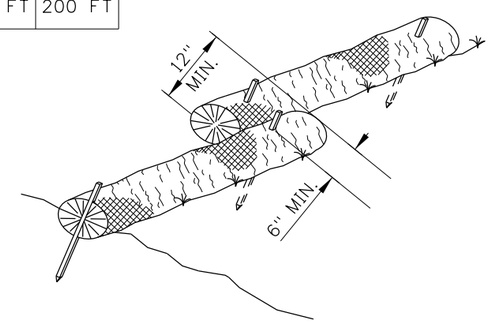

COMPOST SOCK AND FIBER WATTLE OVERLAPPING DETAIL

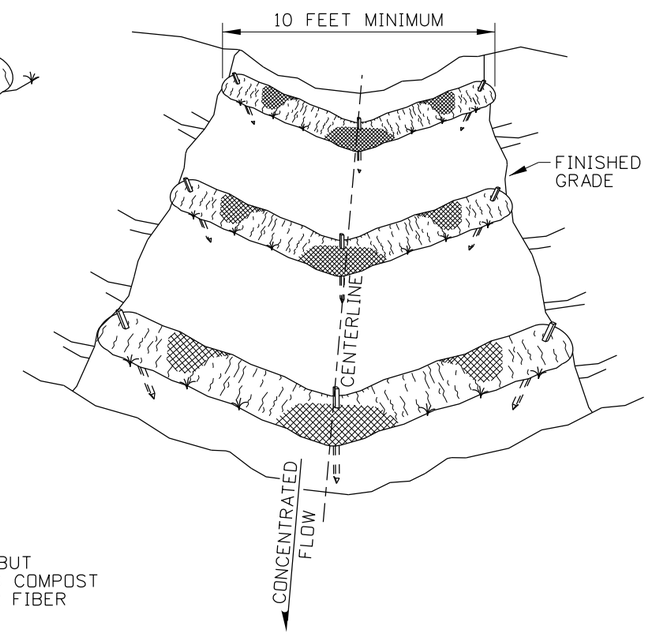

COMPOST SOCK AND FIBER WATTLE TEMPORARY CHECK DAM DETAIL

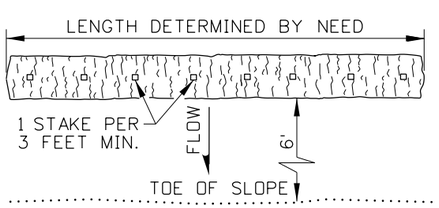

PLACE WATTLES PARALLEL TO TOE OF SLOPE OR ALONG SLOPE CONTOUR

COMPOST SOCK AND FIBER WATTLE

PLAN VIEW

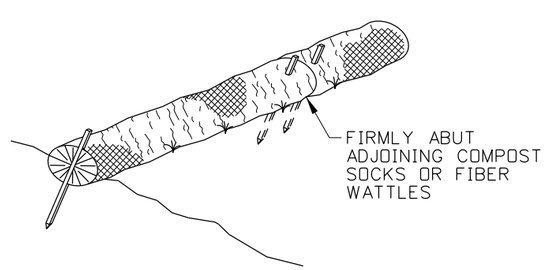

COMPOST SOCK AND FIBER WATTLE ABUTTING DETAIL

NOTES

1. THE GENERAL NOTES FOR ALL P-1 SERIES STANDARD DRAWINGS (TEMPORARY EROSION CONTROL) ARE GIVEN ON STANDARD DRAWING P-1-D.

2. INSTALL TEMPORARY SEDIMENT CONTROL BARRIERS IN ACCORDANCE WITH MANUFACTURERS INSTRUCTIONS AND SPECIFICATIONS. THE DIMENSIONS SHOWN ARE GENERAL GUIDELINES.

3. PLACE SEDIMENT BARRIERS TO FOLLOW THE SLOPE CONTOURS. METAL POSTS OR WOOD STAKES MAY BE USED.

4. ENSURE THAT RUNOFF PASSES THROUGH THE SILT FENCE AND NOT AROUND THE FENCE.

5. ENSURE THAT SILT FENCE MATERIAL IS IN ACCORDANCE WITH 718.09 OF THE STANDARD SPECIFICATIONS FOR HIGHWAY CONSTRUCTION.

6. GROUND SILT FENCES WITH WIRE MESH IN ACCORDANCE WITH THE GROUNDING DETAIL SHOWN ON STANDARD DRAWING F-2-A.

7. THE NEED FOR TEMPORARY SEDIMENT CONTROL DEVICES ARE DETERMINED BY SITE DESIGN. SPACE SILT FENCES, COMPOST SOCKS, AND FIBER WATTLES IN ACCORDANCE WITH THE SILT FENCE SPACING TABLE AND FIBER WATTLE & COMPOST SOCK SPACING TABLE.

8. ON SLOPES, TURN THE ENDS OF EACH ROW OF COMPOST SOCKS AND FIBER WATTLES UPSLOPE TO PREVENT RUNOFF FROM FLOWING AROUND THE SOCK OR WATTLE.

9. EXTEND OR JOIN SILT FENCE USING SILT FENCE LAP WITH NESTED POSTS.

10. REMOVE SEDIMENT FROM THE UPSLOPE SIDE OF SILT FENCES, COMPOST SOCKS, AND FIBER WATTLES WHEN ACCUMULATION HAS REACHED ½ OF THE EFFECTIVE HEIGHT OF THE BARRIER.

11. NOT TO SCALE.

ORIGINAL STORED AT: ITD, Headquarters 3311 West State Boise, Idaho

ORIGINAL SIGNED BY: J. CALEB LAKEY DATE ORIGINAL SIGNED: FEBRUARY 1, 2013

REVISIONS								
NO.	DATE	BY	NO.	DATE	BY	NO.	DATE	BY
1	09-93	MSM	6	01-13	RDL			
2	12-94	MSM						
3	06-96	GFK						
4	10-10	KEH						
5	10-11	KEH						

SCALES SHOWN ARE FOR 11" X 17" PRINTS ONLY

CADD FILE NAME: p1b_0213.std

DRAWING DATE: APRIL, 1993

IDAHO TRANSPORTATION DEPARTMENT

BOISE IDAHO

ORIGINAL SIGNED BY: LOREN THOMAS
HIGHWAYS PROGRAM OVERSIGHT ENGINEER
ORIGINAL SIGNED BY: TOM COLE
CHIEF ENGINEER

STANDARD DRAWING

TEMPORARY SEDIMENT CONTROL BARRIERS

REQUIRES STD. DWG. P-1-D

English

STANDARD DRAWING NO.

P-1-B

SHEET 1 OF 1

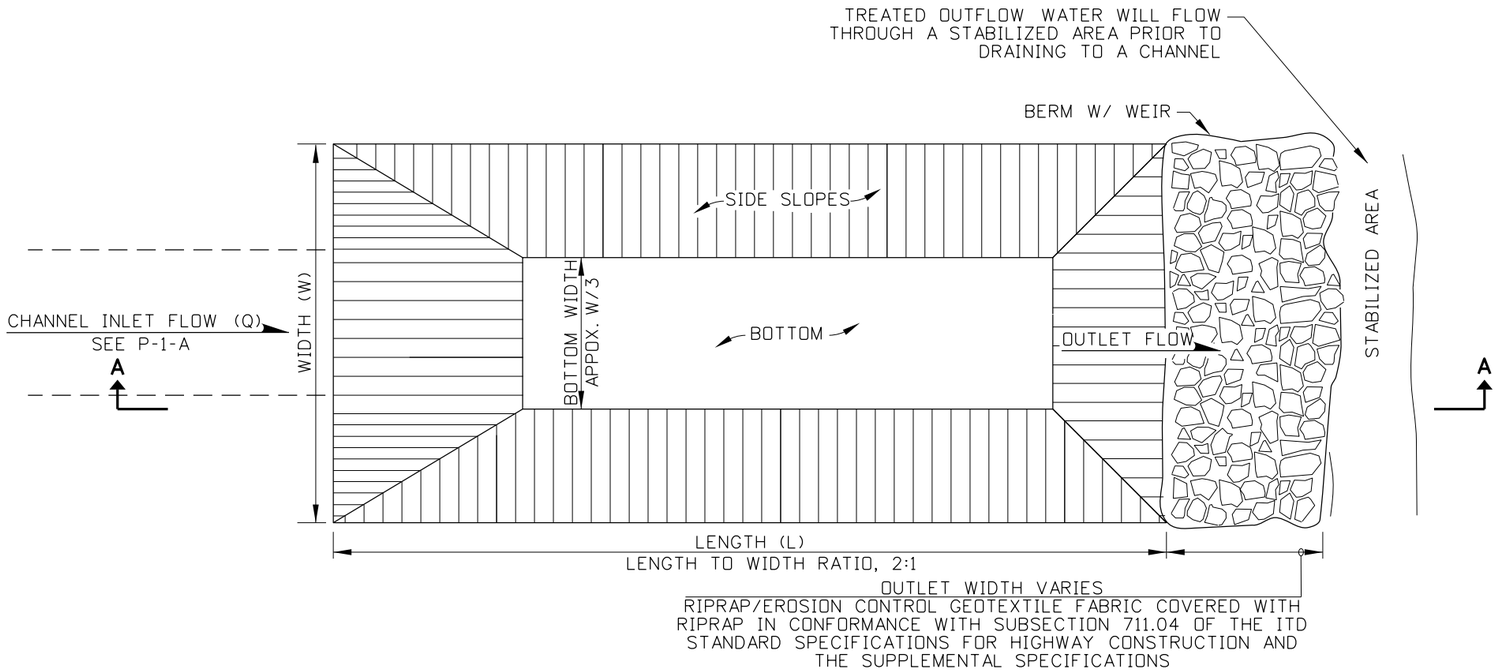

PLAN - SEDIMENT TRAP BASIN

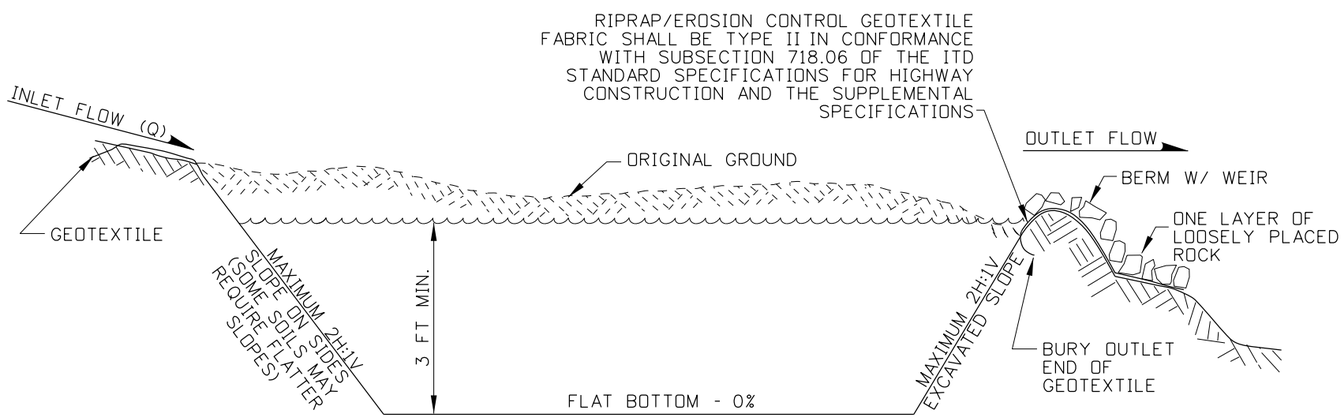

SECTION A-A

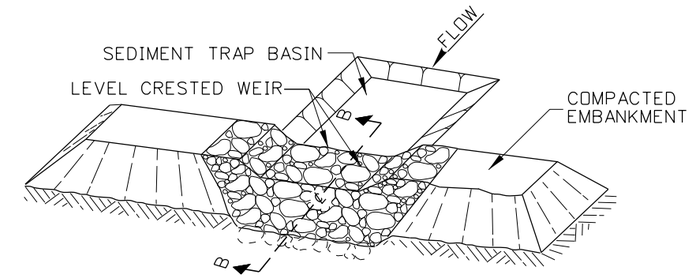

ISOMETRIC VIEW - WITH SEDIMENT TRAP

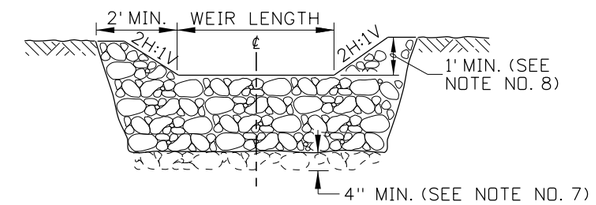

LEVEL CRESTED WEIR - TYPE 2

SECTION B-B

NOTES

1. THE GENERAL NOTES FOR ALL P-1 SERIES DRAWINGS (TEMPORARY EROSION CONTROL) ARE GIVEN ON THE STANDARD DRAWING P-1-D (TEMPORARY EROSION CONTROL DIVERSION DEVICES & SITE EXAMPLE).

2. THE SEDIMENT TRAP BASIN SIZE SHALL BE DETERMINED BY A 2 YEAR 24 HOUR STORM DESIGN AND THE SEDIMENT REMOVAL TABLE GIVEN ON STANDARD DRAWING P-4-A (EROSION & SEDIMENT CONTROL RETENTION BASIN). A MAXIMUM OF A 5 ACRE DRAINAGE AREA SHALL BE USED PER SEDIMENT TRAP BASIN.

3. SEDIMENT TRAP BASIN SHOULD BE LOCATED OUTSIDE OF THE SLOPE STAKE LIMITS AND SHOULD BE CONSTRUCTED PRIOR TO THE START OF EXCAVATION OR REMOVAL OF EXISTING VEGETATION.

4. ALL DISCHARGES FROM TEMPORARY EROSION CONTROL DEVICES SHOULD BE DIRECTED THROUGH A SEDIMENT TRAP BASIN BEFORE RELEASE.

5. SIZE IS DETERMINED BY DESIGNED USE OF SEDIMENT TRAP BASIN.

6. ENTIRE BASIN MAY BE ROCK LINED IF NECESSARY.

7. ALL STONE FILTER DEVICES SHOULD BE EMBEDDED A MINIMUM OF 4 INCHES INTO THE EXISTING GROUND/EMBANKMENT.

8. TYPE 2 STONE FILTER LEVEL CRESTED WEIRS SHALL MAINTAIN A MINIMUM OF 1 FOOT (1') BETWEEN THE TOP OF WEIR AND THE TOP OF THE EMBANKMENT. THE "V" NOTCH OPTION IS INTENDED TO BE USED ON HIGH VELOCITY FLOWS (GREATER THAN 8FT./SEC.).

9. NOT TO SCALE.

ORIGINAL STORED AT: ITD, Headquarters 3311 West State Boise, Idaho

ORIGINAL SIGNED BY: KARISSA HARDY
DATE ORIGINAL SIGNED: OCTOBER 26, 2011

REVISIONS

NO.	DATE	BY	NO.	DATE	BY	NO.	DATE	BY
1	9-93	MSM						
2	2-96	MSM						
3	10-2010	KEH						
4	10-2011	KEH						

SCALES SHOWN ARE FOR 11" X 17" PRINTS ONLY

CADD FILE NAME: p1c_1011.std

DRAWING DATE: APRIL, 1993

IDAHO TRANSPORTATION DEPARTMENT

BOISE IDAHO

ORIGINAL SIGN BY: LOREN THOMAS
HIGHWAYS PROGRAM OVERSIGHT ENGINEER
ORIGINAL SIGN BY: TOM COLE
CHIEF ENGINEER

STANDARD DRAWING

EROSION & SEDIMENT CONTROL SEDIMENT TRAP BASIN

REQUIRES STD. DWG. P-1-D & P-4-A

English

STANDARD DRAWING NO.

P-1-C

SHEET 1 OF 1

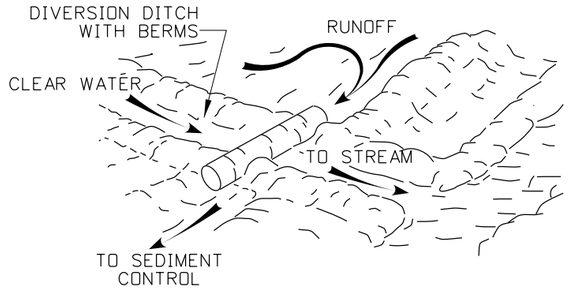

CLEAR WATER DIVERSION

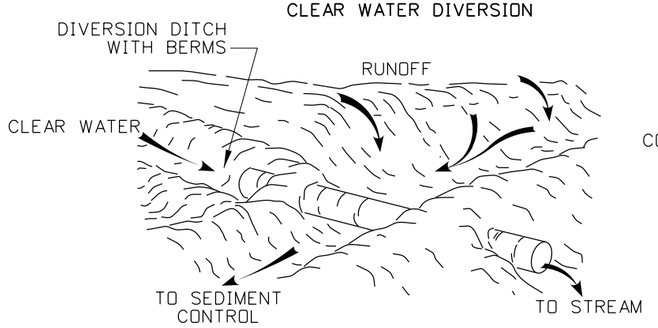

RUNOFF DIVERSION

PIPED DIVERSIONS

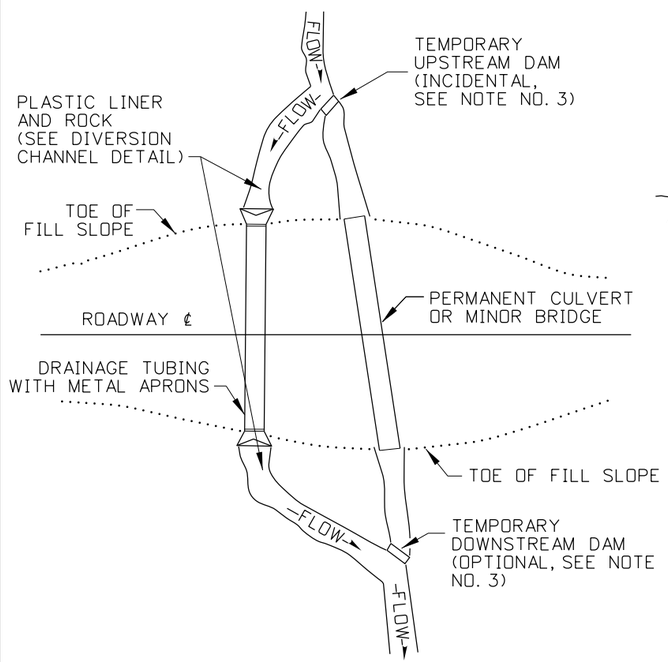

DIVERSION CHANNEL

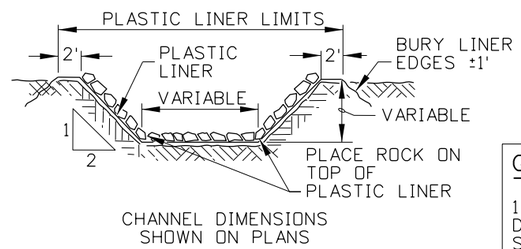

DIVERSION CHANNEL DETAIL

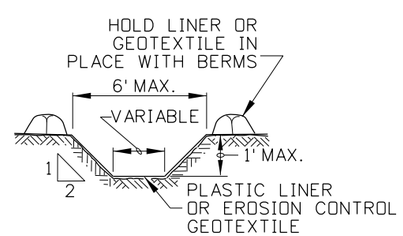

TO BE USED ONLY FOR CLEAR WATER

DIVERSION DITCH

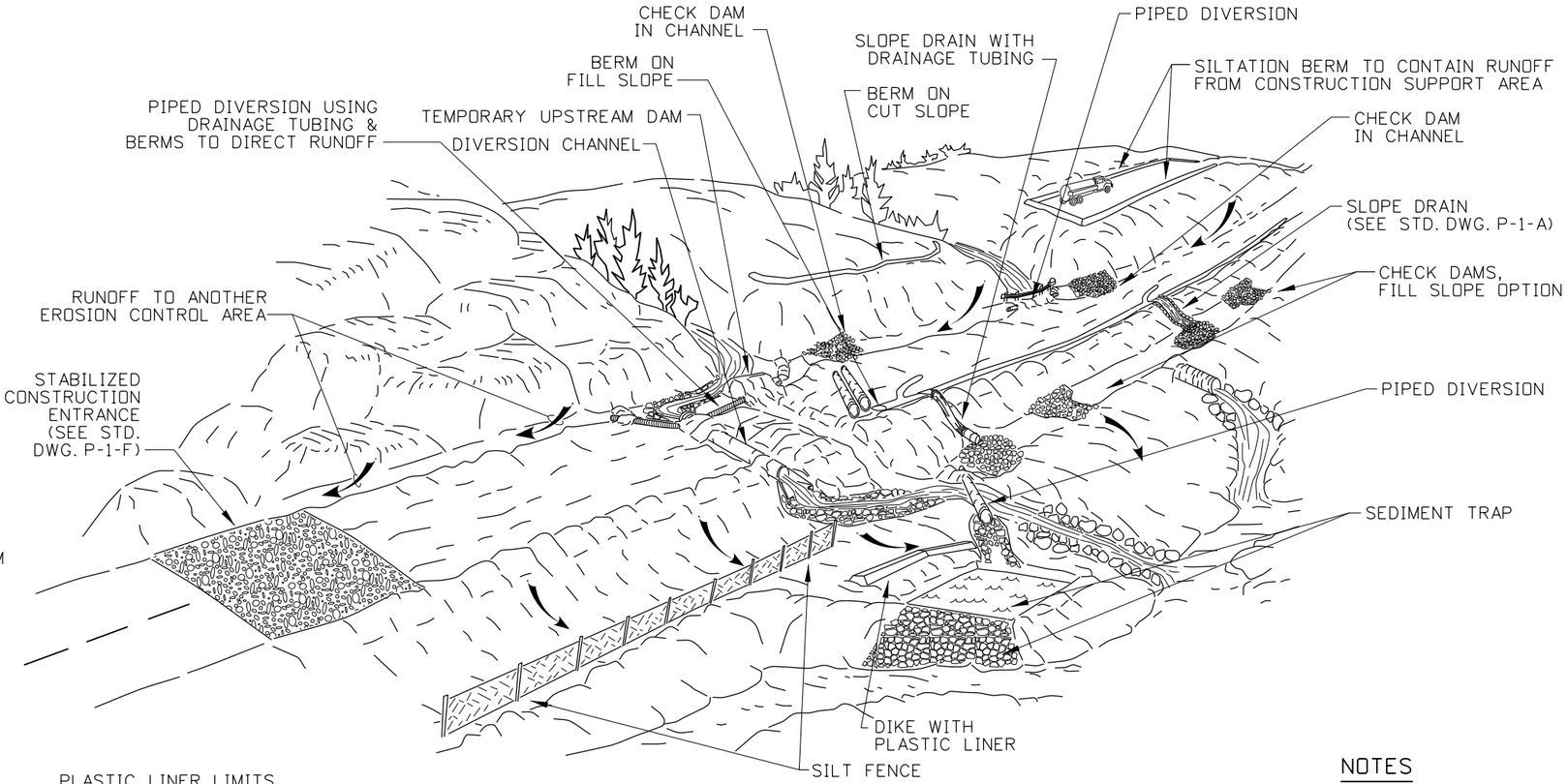

SITE EXAMPLE

GENERAL NOTES FOR TEMPORARY EROSION CONTROL

1. USE TEMPORARY EROSION CONTROL DEVICES STANDARD DRAWINGS IN CONJUNCTION WITH THE STANDARD SPECIFICATIONS FOR HIGHWAY CONSTRUCTION AND THE ITD BEST MANAGEMENT PRACTICES MANUAL.

2. SEE PLANS FOR SITE DIMENSIONS.

3. THE PLACEMENT OF TEMPORARY EROSION CONTROL MEASURES IS SITE SPECIFIC. OBTAIN THE ENGINEER'S APPROVAL OF THE TEMPORARY EROSION CONTROL MEASURES PRIOR TO INSTALLATION.

4. TEMPORARY EROSION CONTROL DEVICES ARE NOT INTENDED TO LAST MORE THAN 6 MONTHS OR UNTIL THEY ARE INTEGRATED INTO A FINAL EROSION CONTROL SYSTEM.

NOTES

1. SEE THE GENERAL NOTES FOR TEMPORARY EROSION CONTROL.

2. CONSTRUCT DIVERSION CHANNELS AS SHOWN ON THE PLANS. CONSTRUCT THE CHANNEL SIZE, ALIGNMENT, SLOPE, ROCK SIZE AND TYPE, AND PLASTIC LINER AS SHOWN ON THE PLANS OR AS DIRECTED BY THE ENGINEER.

3. USE A TEMPORARY DAM TO DIVERT ALL WATER INTO THE DIVERSION CHANNEL. A TEMPORARY DOWNSTREAM DAM IS OPTIONAL AND MAY BE USED TO PREVENT WATER FROM RETURNING TO THE UPSTREAM WORK AREA.

4. PLACE A PLASTIC LINER ALONG THE LENGTH AND WIDTH OF THE DIVERSION CHANNEL. OVERLAP THE PLASTIC LINER EDGES 2 FEET. SECURE PLASTIC LINER EDGES WITH BERMS, ROCKS, OR OTHER SUITABLE MATERIALS.

5. DIVERSION DITCHES ARE PRIMARILY FOR CLEAR WATER. WHEN THE FLOW EXCEEDS 0.25 CUBIC FEET PER SECOND, USE A DIVERSION CHANNEL.

6. NOT TO SCALE.

ORIGINAL STORED AT: ITD, Headquarters 3311 West State Boise, Idaho

ORIGINAL SIGNED BY: J. CALEB LAKEY DATE ORIGINAL SIGNED: DECEMBER 17, 2012

REVISIONS								
NO.	DATE	BY	NO.	DATE	BY	NO.	DATE	BY
1	9-93	MSM						
2	6-96	MSM						
3	10-10	KEH						
4	10-11	KEH						
5	12-12	RDL						

SCALES SHOWN ARE FOR 11" X 17" PRINTS ONLY

CADD FILE NAME: p1d_1212.std

DRAWING DATE: APRIL, 1993

IDAHO TRANSPORTATION DEPARTMENT

BOISE IDAHO

ORIGINAL SIGNED BY: LOREN THOMAS
HIGHWAYS PROGRAM OVERSIGHT ENGINEER
ORIGINAL SIGNED BY: TOM COLE
CHIEF ENGINEER

STANDARD DRAWING

TEMPORARY EROSION CONTROL DIVERSION DEVICES & SITE EXAMPLE

English

STANDARD DRAWING NO.

P-1-D

SHEET 1 OF 1

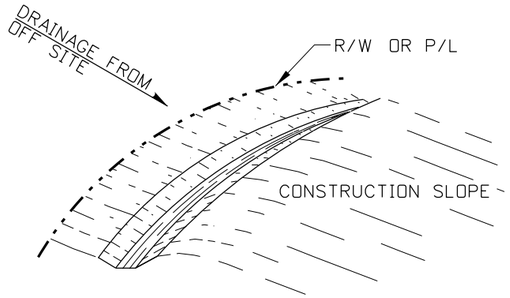

PERIMETER SWALE

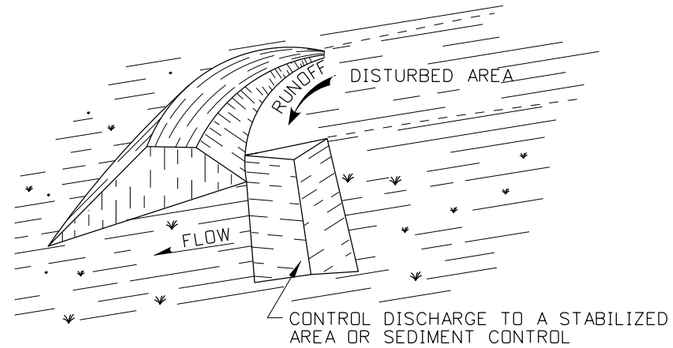

PERIMETER DIKE

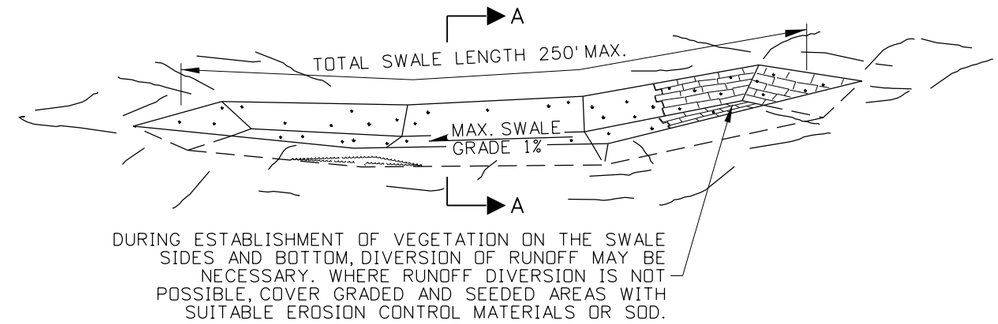

GRASSED SWALE

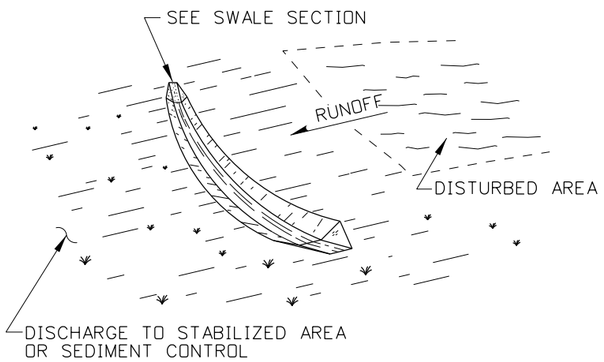

INTERCEPTOR SWALE

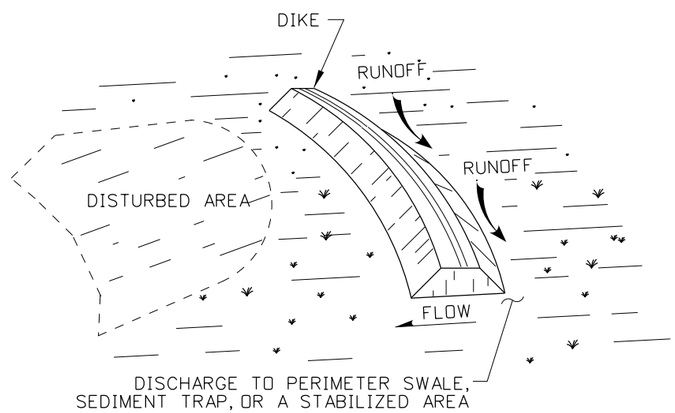

INTERCEPTOR DIKE

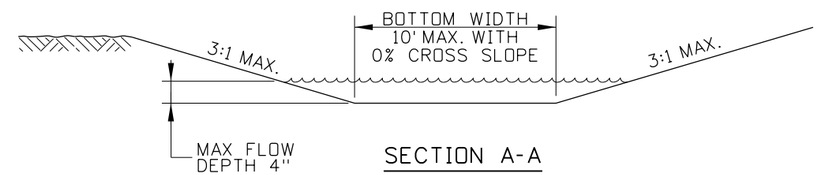

SECTION A-A

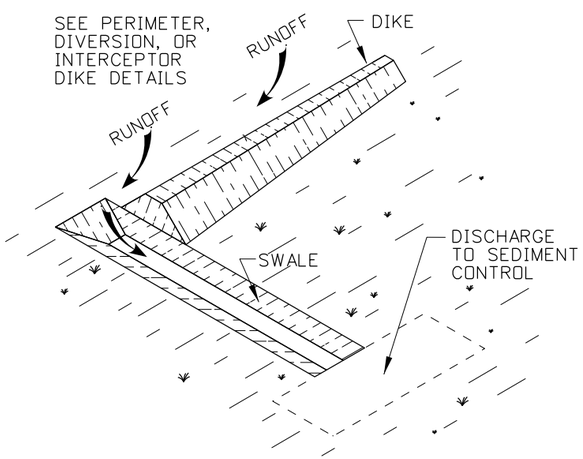

DIVERSION SWALE

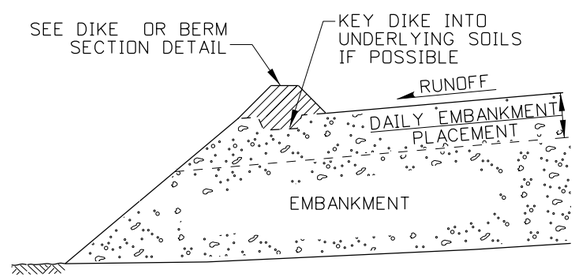

EMBANKMENT SECTION - DIVERSION DIKE

NOTES

1. THE GENERAL NOTES FOR ALL P-1 SERIES STANDARD DRAWINGS (TEMPORARY EROSION CONTROL) ARE GIVEN ON STANDARD DRAWING P-1-D.

2. LOCATE BERMS, DIKES, AND SWALES ALONG THE CONTOUR OF A SLOPE AND MAY BE AT THE TOE OF THE EXPOSED SOIL AREA.

3. CONSTRUCT GRASSED SWALES AT LOCATIONS SHOWN ON THE PLANS. THE SWALE DIMENSIONS AND FLOW GRADES SHALL BE DETERMINED BY DESIGN.

4. THE RECOMMENDED MAXIMUM DRAINAGE AREA FOR GRASSED SWALES IS 1 ACRE. THE RECOMMENDED MAXIMUM DRAINAGE AREA CONTRIBUTING RUNOFF TO A DIKE, SWALE OR COMBINATION THEREOF SHOULD NOT EXCEED 5 ACRES.

5. USE DIKES WHEN BERMS ARE NOT SUFFICIENT TO CONTROL RUNOFF. COMPACT DIKES TO 90 PERCENT OF STANDARD DENSITY. THE USE OF INTERCEPTOR DITCHES IN CONJUNCTION WITH DIKES AND SWALES IN CONJUNCTION WITH BERMS ARE NOT RECOMMENDED.

6. DIVERT COLLECTED RUNOFF, INTERCEPTED RUNOFF, OR BOTH FROM A BERM, DIKE, SWALE OR COMBINATION THEREOF TO A SEDIMENT TRAPPING DEVICE OR STABILIZED AREA.

7. ENSURE THAT THE SIDE SLOPES OF A DIKE OR SWALE WITHIN THE CLEAR ZONE IS 6:1 OR FLATTER UNLESS SHIELDED.

8. NOT TO SCALE.

ORIGINAL STORED AT: ITD, Headquarters 3311 West State Boise, Idaho

ORIGINAL SIGNED BY: J. CALEB LAKEY DATE ORIGINAL SIGNED: FEBRUARY 1, 2013

REVISIONS

NO.	DATE	BY	NO.	DATE	BY	NO.	DATE	BY
1	12-94	MSM						
2	02-96	MSM						
3	10-10	KEH						
4	10-11	KEH						
5	01-13	RDL						

SCALES SHOWN ARE FOR 11" X 17" PRINTS ONLY

CADD FILE NAME: p1e_0213.std

DRAWING DATE: APRIL, 1994

IDAHO TRANSPORTATION DEPARTMENT

BOISE IDAHO

ORIGINAL SIGNED BY: LOREN THOMAS
HIGHWAYS PROGRAM OVERSIGHT ENGINEER
ORIGINAL SIGNED BY: TOM COLE
CHIEF ENGINEER

STANDARD DRAWING

TEMPORARY SEDIMENT CONTROL BERMS, DIKES, AND SWALES

REQUIRES STD. DWG. P-1-D

English

STANDARD DRAWING NO.

P-1-E

SHEET 1 OF 2

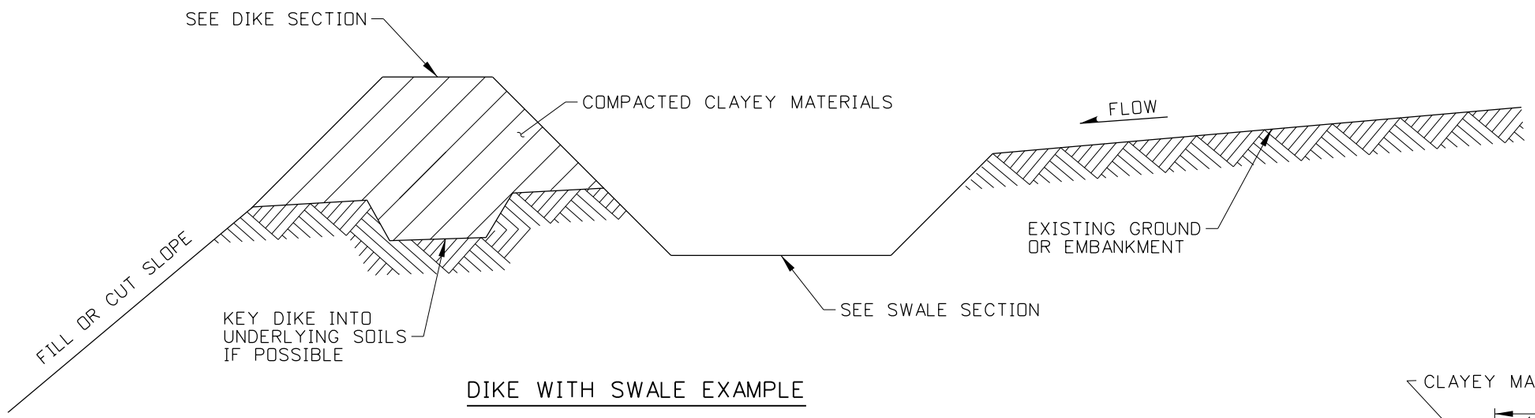

DIKE WITH SWALE EXAMPLE

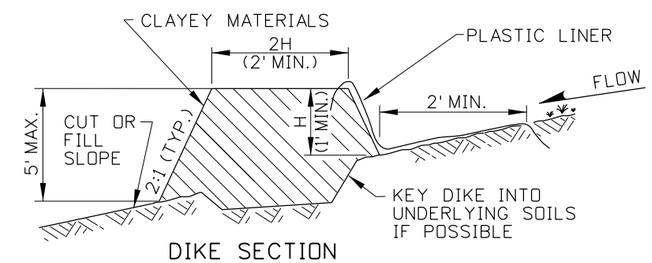

DIKE SECTION

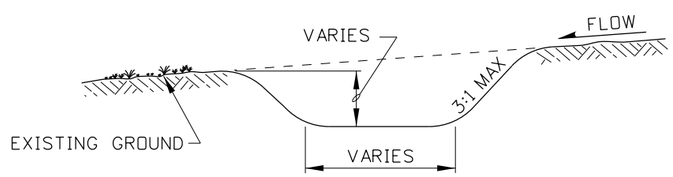

SWALE SECTION

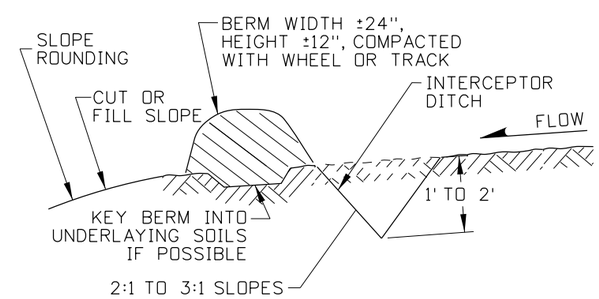

BERM & INTERCEPTOR DITCH SECTION

ORIGINAL STORED AT: ITD, Headquarters 3311 West State Boise, Idaho

ORIGINAL SIGNED BY: J. CALEB LAKEY DATE ORIGINAL SIGNED: FEBRUARY 1, 2013

REVISIONS								
NO.	DATE	BY	NO.	DATE	BY	NO.	DATE	BY
1	12-94	MSM						
2	02-96	MSM						
3	10-10	KEH						
4	10-11	KEH						
5	01-13	RDL						

SCALES SHOWN ARE FOR 11" X 17" PRINTS ONLY

CADD FILE NAME: p1e_0213.std

DRAWING DATE: APRIL, 1994

IDAHO TRANSPORTATION DEPARTMENT

BOISE IDAHO

ORIGINAL SIGNED BY: LOREN THOMAS
HIGHWAYS PROGRAM OVERSIGHT ENGINEER

ORIGINAL SIGNED BY: TOM COLE
CHIEF ENGINEER

STANDARD DRAWING

TEMPORARY SEDIMENT CONTROL BERMS, DIKES, AND SWALES

REQUIRES STD. DWG. P-1-D

English

STANDARD DRAWING NO.

P-1-E

SHEET 2 OF 2

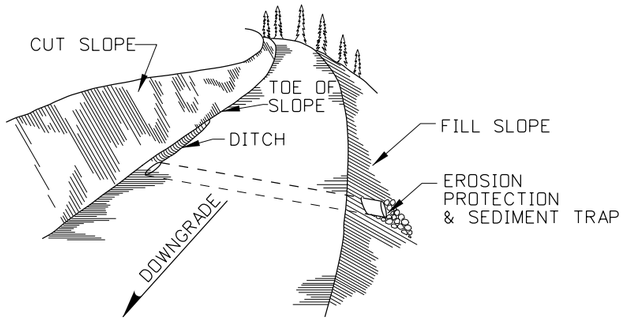

PIPE CULVERT

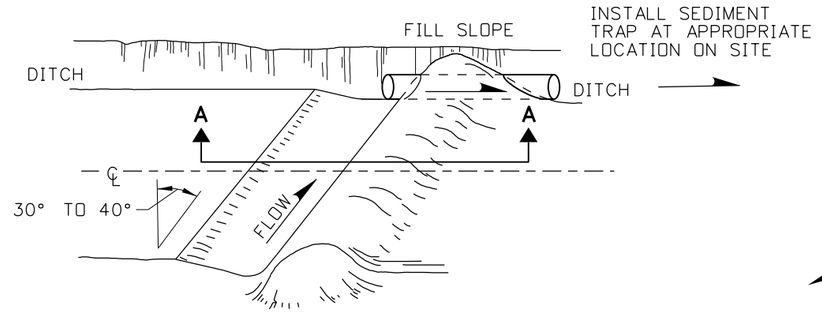

WATERBAR

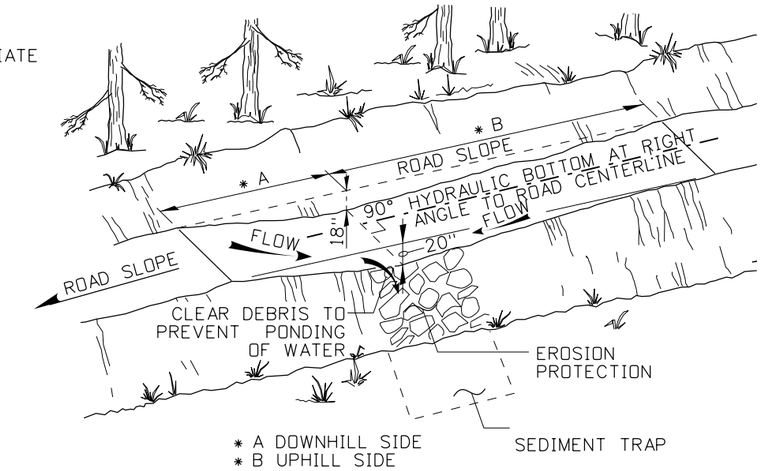

ROLLING DIP DETAIL

(SEE ROLLING DIP DIMENSION TABLE)

ROLLING DIP DIMENSION TABLE		
% ROAD SLOPE	A (DOWNHILL)	B (UPHILL)
0% TO 4%	35'	65'
4% TO 6%	25'	75'

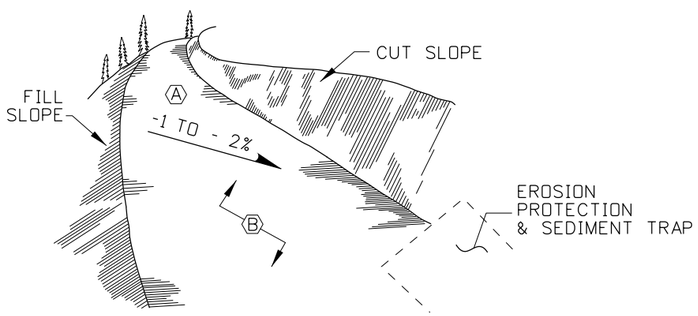

Ⓐ DIVERT RUNOFF ACROSS ROAD SURFACE FROM TOP OF FILL SLOPE TO CUT SLOPE.

Ⓑ ROAD SURFACE MUST BE RELATIVELY SMOOTH TO PREVENT PUDDLING & EROSION.

ROAD SLOPING

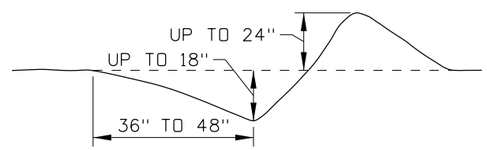

SECTION A-A

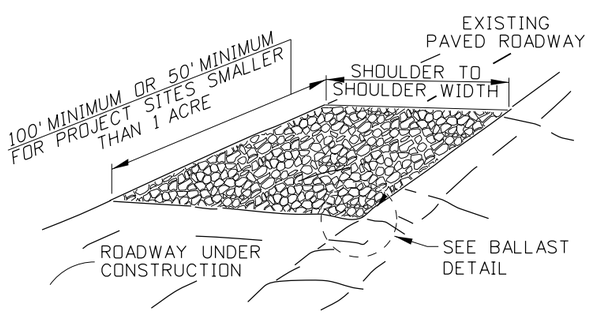

IN-LINE WITH EXISTING ROADWAY

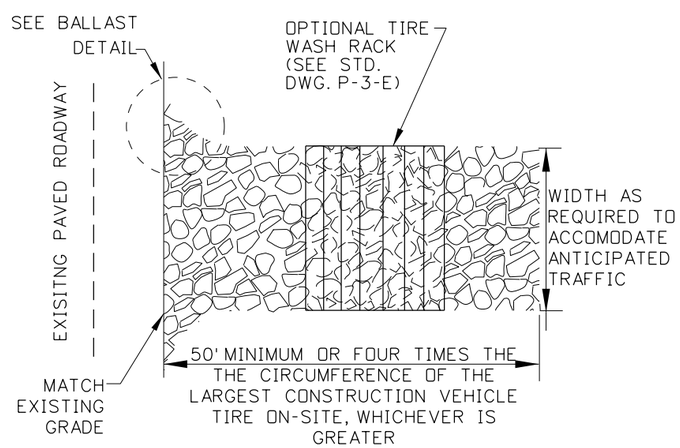

PERPENDICULAR TO EXISTING PAVEMENT

STABILIZED CONSTRUCTION ENTRANCE

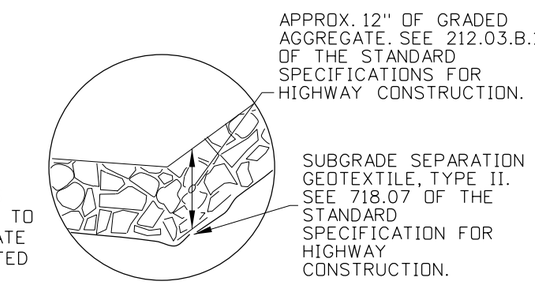

BALLAST DETAIL

NOTES

1. THE GENERAL NOTES FOR ALL P-1 SERIES STANDARD DRAWINGS (TEMPORARY EROSION CONTROL) ARE GIVEN ON STANDARD DRAWING P-1-D (TEMPORARY EROSION CONTROL DIVERSION DEVICES & SITE EXAMPLE).
2. LIMIT DRAINAGE AREA TO FIVE ACRES.
3. STABILIZED CONSTRUCTION ENTRANCES MAY REQUIRE PERIODIC MAINTENANCE OF AGGREGATE AS CONDITIONS DEMAND.
4. CONSTRUCT STABILIZED CONSTRUCTION ENTRANCES LOCATED ON A DETOURED ROADWAY WITH THE MINIMUM PUBLIC ROAD RADII AND WIDTH REQUIREMENTS.
5. MODIFICATIONS TO THESE INSTALLATIONS MAY BE NECESSARY TO ACCOMMODATE FIELD CONDITIONS.
6. NOT TO SCALE.

ORIGINAL STORED AT: ITD, Headquarters 3311 West State Boise, Idaho

ORIGINAL SIGNED BY: J. CALEB LAKEY DATE ORIGINAL SIGNED: DECEMBER 17, 2012

REVISIONS								
NO.	DATE	BY	NO.	DATE	BY	NO.	DATE	BY
1	6-96	MSM						
2	10-10	KEH						
3	10-11	KEH						
4	12-12	RDL						

SCALES SHOWN ARE FOR 11" X 17" PRINTS ONLY

CADD FILE NAME: p1f_1212.std

DRAWING DATE: JANUARY, 1994

IDAHO TRANSPORTATION DEPARTMENT

BOISE IDAHO

ORIGINAL SIGNED BY: LOREN THOMAS
HIGHWAYS PROGRAM OVERSIGHT ENGINEER
ORIGINAL SIGNED BY: TOM COLE
CHIEF ENGINEER

STANDARD DRAWING

EROSION AND SEDIMENT CONTROL FOR TEMPORARY ROADS

REQUIRES STD. DWG. P-1-D

English

STANDARD DRAWING NO.

P-1-F

SHEET 1 OF 1

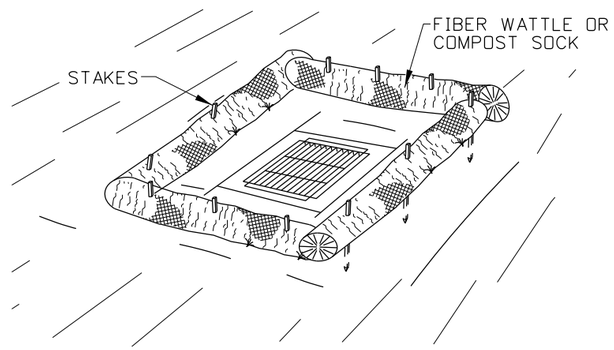

FIBER WATTLE FILTER

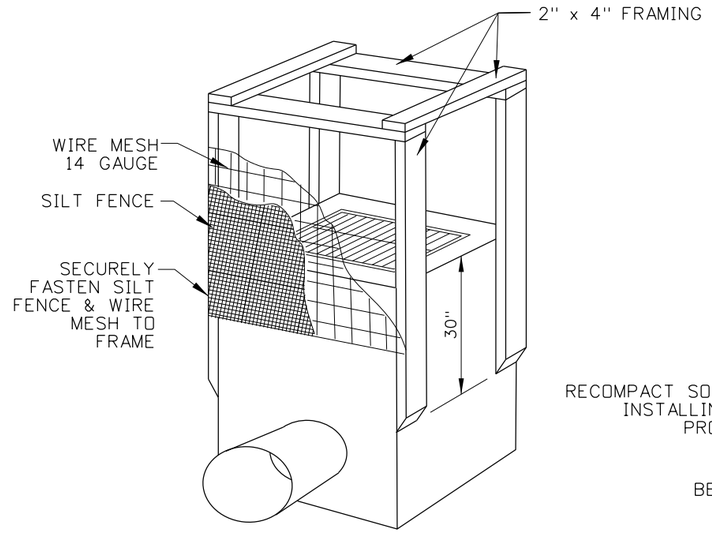

PERSPECTIVE VIEW

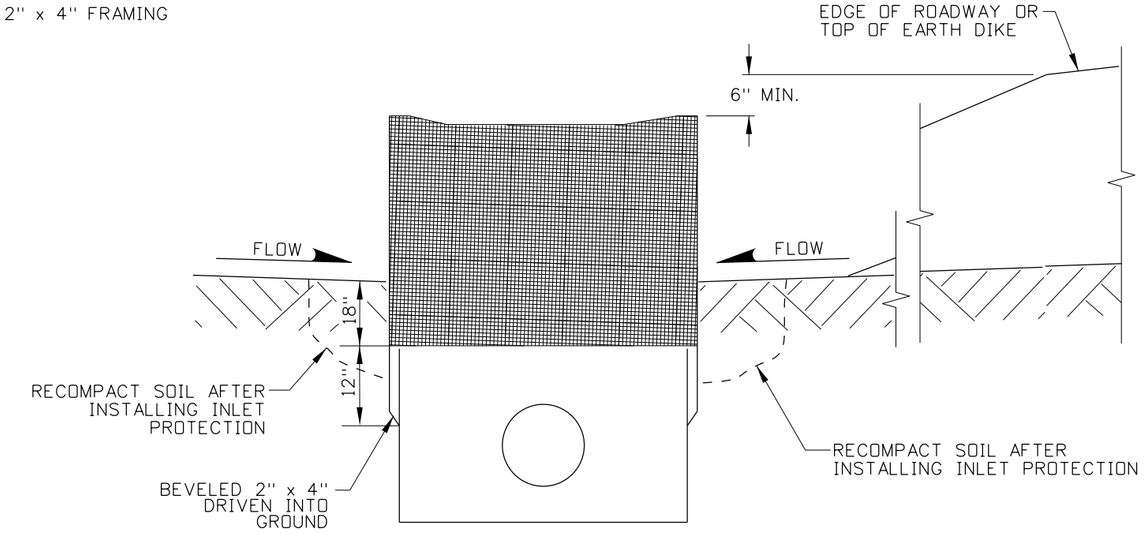

ELEVATION

FRAMED WIRE/FABRIC FILTER

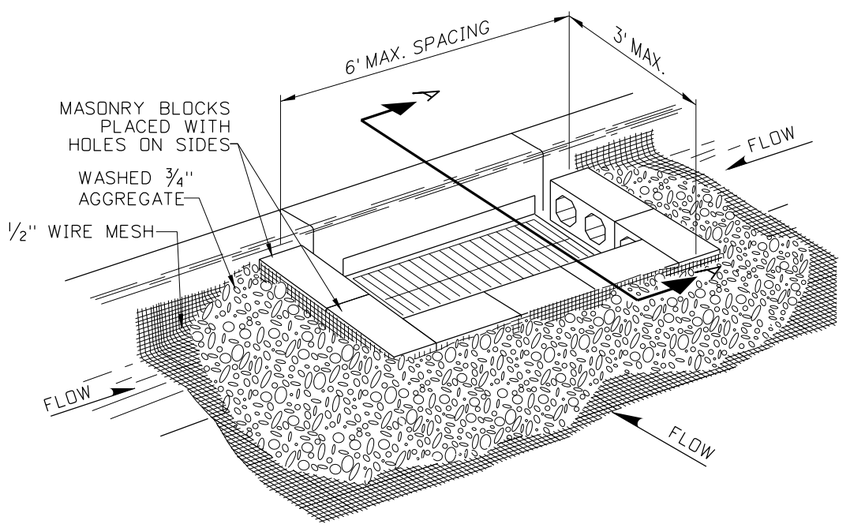

GRAVEL AND WIRE MESH FILTER

PERIMETER FILTER

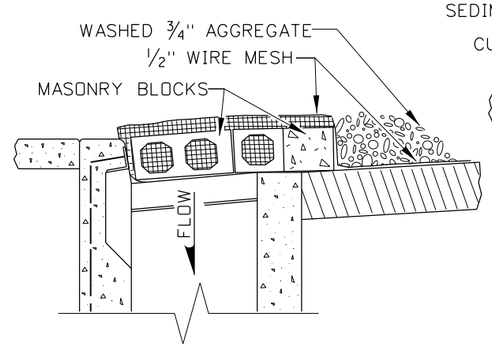

SECTION A-A

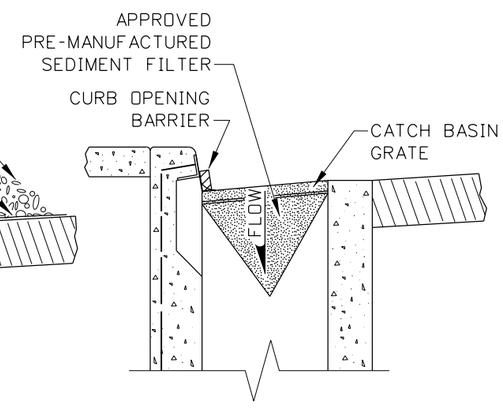

PRE-MANUFACTURED SEDIMENT FILTER FOR INLET GRATE

NOTES

1. THE GENERAL NOTES FOR ALL P-1 SERIES STANDARD DRAWINGS (TEMPORARY EROSION CONTROL) ARE GIVEN ON STANDARD DRAWING P-1-D.

2. REMOVE TRASH, DEBRIS, DUFF, AND MATERIALS THAT MAY INTERFERE WITH THE INLET OR CATCH BASIN PROTECTION FUNCTION PRIOR TO PLACEMENT AND THEREAFTER ON A DAILY BASIS OR AS NEEDED.

3. FIELD ADJUSTMENTS MAY BE NECESSARY TO ENSURE EFFECTIVENESS.

4. FRAMED WIRE/FABRIC FILTER AND FIBER WATTLE FILTERS ARE INTENDED TO BE USED ON ANY STRUCTURE NOT PRESENTLY SURROUNDED BY PAVEMENT.

5. GRAVEL AND WIRE MESH FILTER AND PRE-MANUFACTURED SEDIMENT FILTER INSTALLATIONS ARE INTENDED TO BE USED ON STRUCTURES SURROUNDED BY PAVEMENT WITH OR WITHOUT CURBS.

6. ENSURE THAT WATER DISCHARGING FROM THE INLET MEETS APPLICABLE WATER QUALITY STANDARDS.

7. NOT TO SCALE.

ORIGINAL STORED AT: ITD, Headquarters 3311 West State Boise, Idaho

ORIGINAL SIGNED BY: J. CALEB LAKEY DATE ORIGINAL SIGNED: FEBRUARY 1, 2013

REVISIONS

NO.	DATE	BY	NO.	DATE	BY	NO.	DATE	BY
1	10-10	KEH						
2	10-11	KEH						
3	01-13	RDL						

SCALES SHOWN ARE FOR 11" X 17" PRINTS ONLY

CADD FILE NAME: p1h_0213.std

DRAWING DATE: JUNE, 1996

IDAHO TRANSPORTATION DEPARTMENT

BOISE IDAHO

ORIGINAL SIGNED BY: LOREN THOMAS
HIGHWAYS PROGRAM OVERSIGHT ENGINEER
ORIGINAL SIGNED BY: TOM COLE
CHIEF ENGINEER

STANDARD DRAWING

TEMPORARY SEDIMENT CONTROL INLET PROTECTION

REQUIRES STD. DWG. P-1-D

English

STANDARD DRAWING NO.

P-1-H

SHEET 1 OF 1

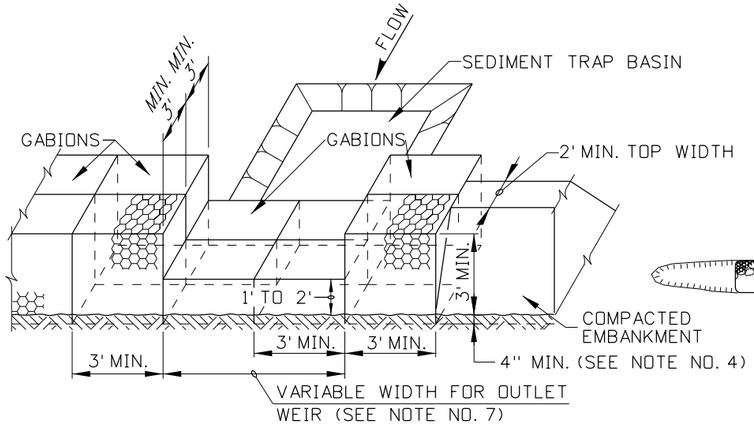

MINIMUM DIMENSIONS SHOWN. SITE CONDITIONS WILL DETERMINE ACTUAL DIMENSIONS.

GABION OUTLET WEIR

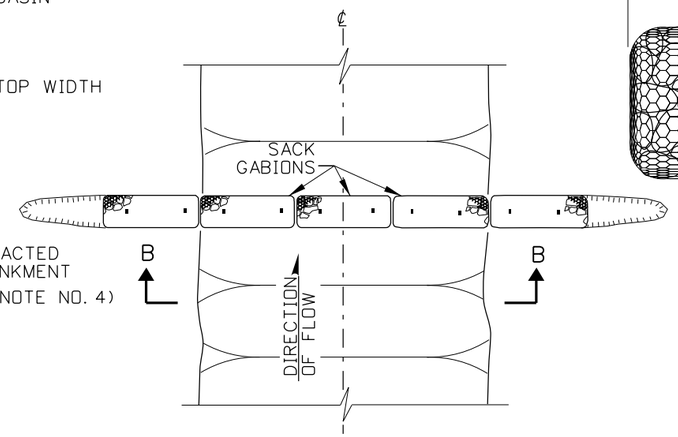

GABION CHECK DAM

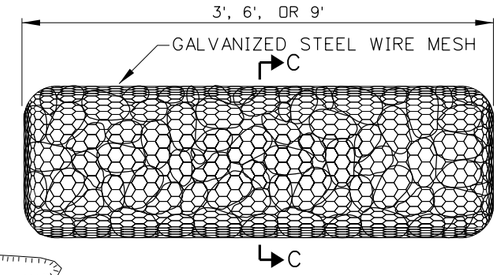

SACK GABION

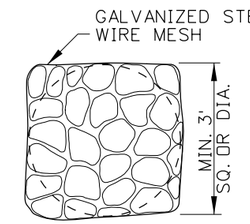

SECTION C-C

GENERAL NOTES FOR PERMANENT EROSION CONTROL

1. USE PERMANENT EROSION CONTROL DEVICES STANDARD DRAWINGS IN CONJUNCTION WITH THE STANDARD SPECIFICATIONS FOR HIGHWAY CONSTRUCTION AND THE ITD BEST MANAGEMENT PRACTICES MANUAL.

2. SEE PLANS FOR SITE DIMENSIONS.

3. THE PLACEMENT OF PERMANENT EROSION CONTROL MEASURES IS SITE SPECIFIC. OBTAIN THE ENGINEER'S APPROVAL OF THE PERMANENT EROSION CONTROL MEASURES PRIOR TO INSTALLATION.

4. PERMANENT EROSION CONTROL DEVICES ARE INTENDED TO LAST MORE THAN 6 MONTHS AND SHOULD BE INTEGRATED THE FINAL EROSION CONTROL PLAN.

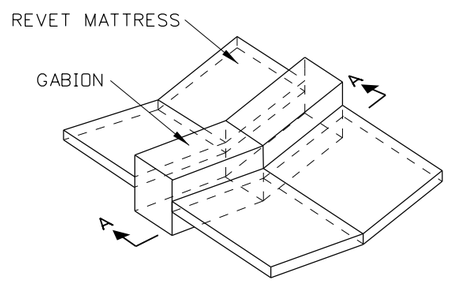

REVET MATTRESSES WITH GABIONS

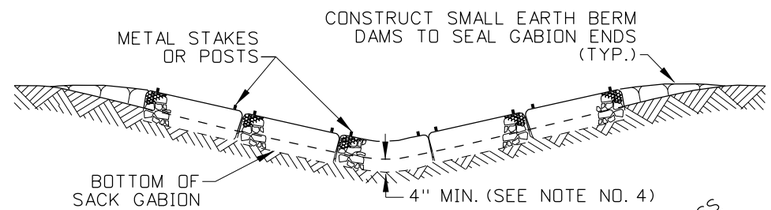

SECTION B-B

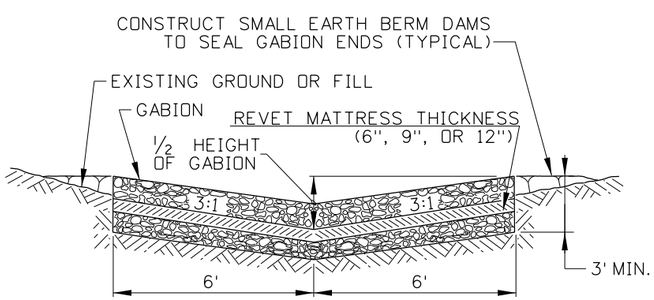

SECTION A-A

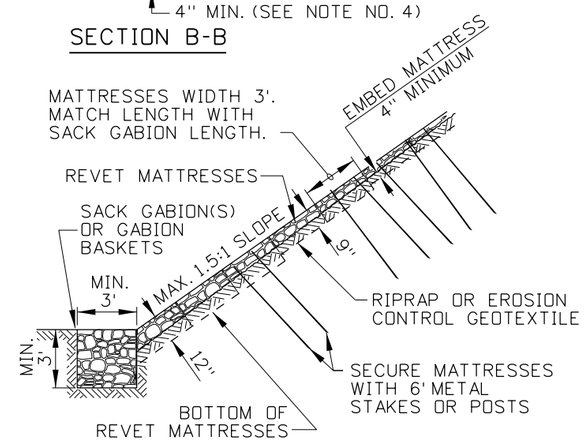

TYPICAL SLOPE SECTION

SLOPE REVETMENT

NOTES

1. OBTAIN APPROPRIATE PERMITS BEFORE EROSION DEVICES ARE PLACED IN STREAMS AND, CHANNELS, OR BOTH.

2. GABIONS AND REVET MATTRESSES MAY BE USED FOR PERMANENT EROSION CONTROL, TEMPORARY EROSION CONTROL, OR BOTH.

3. THE DISCHARGE THROUGH OR OVER REVET MATTRESSES, GABIONS, OR BOTH SHOULD BE DIRECTED ONTO STABILIZED AREA SUCH AS VEGETATION, RIPRAP, OR BOTH.

4. GABIONS AND REVET MATTRESSES SHOULD BE EMBEDDED A MINIMUM OF 4" INTO THE EXISTING GROUND.

5. ALL SACK GABIONS SHOULD BE SECURED WITH 6' x 3/4" METAL STAKES OR 6' STEEL POSTS.

6. ENSURE THAT THE WIDTH OF THE GABION OUTLET WEIR IS CONSTRUCTED AS SHOWN ON THE PLANS OR AS DIRECTED BY THE ENGINEER.

7. GABIONS MAY BE USED WITH REVET MATTRESSES TO FORM SEDIMENT CONTROL DAMS AND SHOULD BE INSTALLED SO THAT THE CHANNEL CAPACITY IS NOT RESTRICTED SHOULD THE DEVICE TOTALLY SILT-UP. REVET MATTRESSES MAY BE USED AS A CHANNEL LINER TO PREVENT EROSION AND TO INTERCEPT SEDIMENT LADEN RUNOFF.

8. 6" REVET MATTRESSES WILL USUALLY PROMOTE VEGETATION FOR SIDE SLOPES THAT ARE NOT CONTINUALLY SUBMERGED IN WATER. 9" REVET MATTRESSES MAY BE USED TO LINE LARGE CHANNELS OR STREAMS WITH GREATER FLOW RATES OR IN SOILS THAT ERODE EASILY. 12" REVET MATTRESSES MAY BE USED TO LINE LARGE STREAMS AND RIVERS.

9. SECURE REVET MATTRESSES USED FOR SLOPE REVETMENT WITH METAL POSTS OR STAKES TO PREVENT SLIDING OR SHIFTING.

10. NOT TO SCALE.

ORIGINAL STORED AT: ITD, Headquarters 3311 West State Boise, Idaho

ORIGINAL SIGNED BY: J. CALEB LAKEY DATE ORIGINAL SIGNED: FEBRUARY 1, 2013

REVISIONS								
NO.	DATE	BY	NO.	DATE	BY	NO.	DATE	BY
1	02-96	MSM						
2	10-10	KEH						
3	10-11	KEH						
4	01-13	RDL						

SCALES SHOWN ARE FOR 11" X 17" PRINTS ONLY

CADD FILE NAME: p2a_0213.std

DRAWING DATE: JANUARY, 1994

IDAHO TRANSPORTATION DEPARTMENT

BOISE IDAHO

ORIGINAL SIGNED BY: LOREN THOMAS
HIGHWAYS PROGRAM OVERSIGHT ENGINEER
ORIGINAL SIGNED BY: TOM COLE
CHIEF ENGINEER

STANDARD DRAWING

EROSION AND SEDIMENT CONTROL GABIONS AND REVET MATTRESSES

English

STANDARD DRAWING NO.

P-2-A

SHEET 1 OF 1

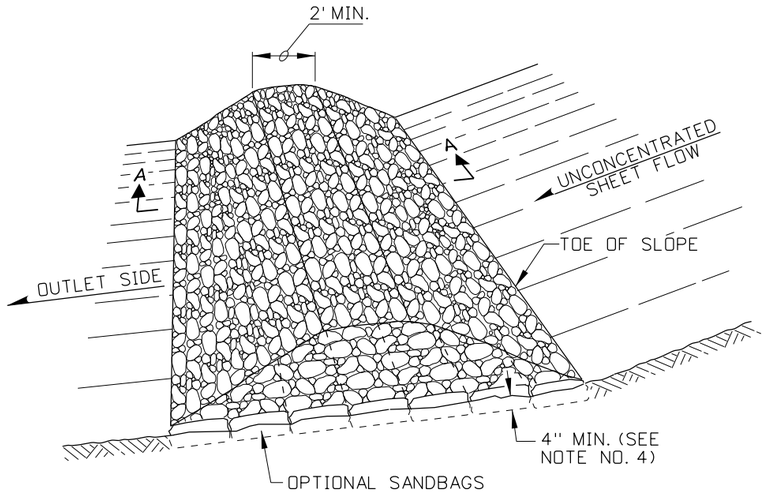

PERSPECTIVE VIEW - AT TOE OF SLOPE

FILTER BERM

(SEE NOTE NO. 6)

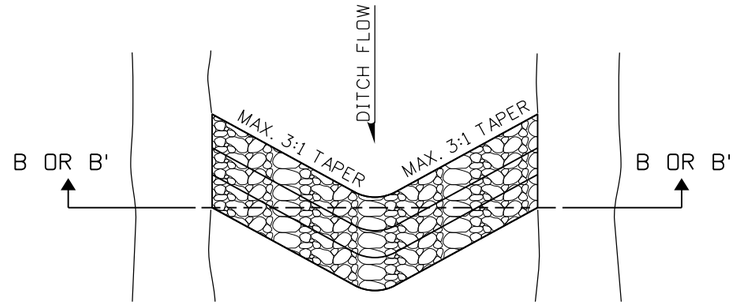

FILTER WEIR

(SEE NOTE NOS. 7 & 8)

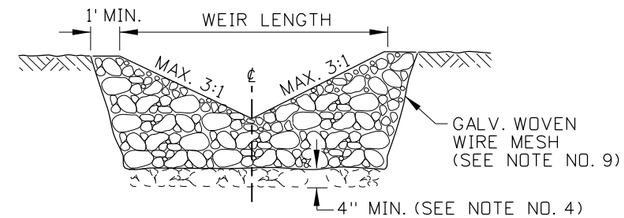

"V" NOTCHED WEIR

SECTION B - B

FOR HIGH VELOCITY FLOWS

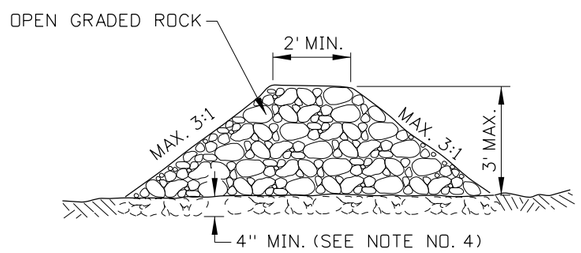

SECTION A-A

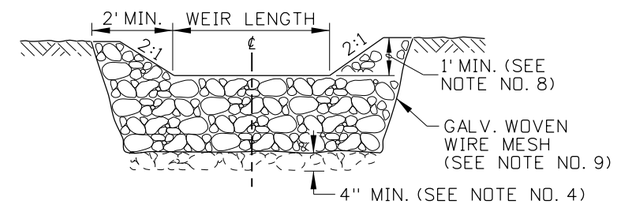

LEVEL CRESTED WEIR

SECTION B' - B'

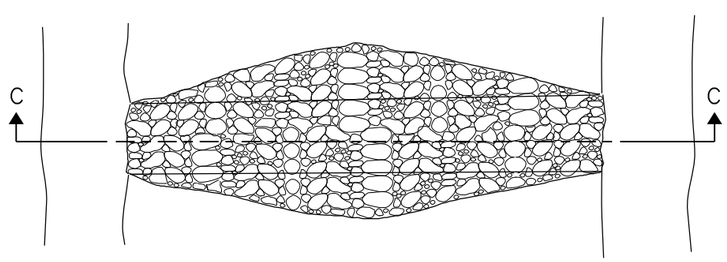

FILTER DAM

(SEE NOTE NOS. 9 THROUGH 11)

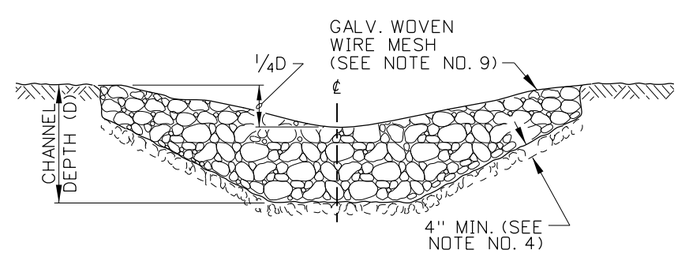

ELEVATION - AT CHANNEL SECTION

SECTION C - C

NOTES

1. GENERAL NOTES FOR P-2 SERIES STANDARD DRAWINGS (PERMANENT EROSION CONTROL) ARE SHOWN ON STANDARD DRAWING P-2-A.

2. PLACE ROCK CHECK DAMS WHERE UP GRADIENT EROSION IS ANTICIPATED, SUCH AS AT THE TOE OF SLOPES, UPSTREAM OF DRAINAGE STRUCTURES, DOWNSTREAM OF DRAINAGE STRUCTURES, OR BOTH, IN ROADWAY DITCHES AND IN CHANNELS.

3. DIRECT THE OUTLET SIDE OF ROCK CHECK DAMS ONTO A STABILIZED AREA SUCH AS VEGETATION, STONE, OR BOTH.

4. EMBED ROCK CHECK DAMS A MINIMUM OF 4 INCHES INTO THE EXISTING GROUND OR EMBANKMENT.

5. ENSURE THAT BERM, WEIR, AND DAM SIDE SLOPES ARE 3:1 OR FLATTER. ENSURE THAT BERMS, WEIRS, AND DAMS WITHIN THE CLEAR ZONE HAVE SLOPES OF 6:1 OR FLATTER UNLESS SHIELDED.

6. FILTER BERMS MAY BE USED ON SLOPE TOES, AROUND INLETS, IN SHALLOW DITCHES, AND AT DIKE AND SWALE OUTLETS. THIS TYPE OF STONE FILTER BERM IS RECOMMENDED TO CONTROL SEDIMENT FROM A DRAINAGE AREA OF 5 ACRES OR LESS. FILTER BERMS MAY NOT BE USED IN CONCENTRATED HIGH VELOCITY FLOWS (GREATER THAN 8FT./SEC.) IN WHICH AGGREGATE WASH-OUT MAY OCCUR. SANDBAGS MAY BE EMBEDDED AT THE FILTER DAM EDGES (4" OR MORE) FOR BETTER FILTERING EFFICIENCY WHEN CALLED FOR ON THE PLANS OR WHEN DIRECTED BY THE ENGINEER.

7. FILTER WEIRS, DAMS, OR BOTH MAY BE USED IN DITCHES AND AT DIKE AND SWALE OUTLETS.

8. ENSURE THAT FILTER WEIRS HAVE A MINIMUM OF 1 FT DISTANCE BETWEEN THE TOP OF WEIR AND THE TOP OF THE EMBANKMENT. THE "V" NOTCH OPTION IS INTENDED TO BE USED ON HIGH VELOCITY FLOWS (GREATER THAN 8FT/SEC).

9. SECURE FILTER WEIRS AND DAMS WITH 20 GAUGE GALVANIZED WOVEN WIRE MESH WITH 1" DIAMETER HEXAGONAL OPENINGS. PLACE THE STONE IN THE MESH TO THE HEIGHT AND SLOPE SPECIFIED. THE MESH SHOULD BE FOLDED AT THE UPSTREAM SIDE OVER THE AGGREGATE AND TIGHTLY SECURED TO ITSELF ON THE DOWNSTREAM SIDE USING WIRE TIES, HOG RINGS, OR LOCKING PLASTIC TIES.

10. CONSTRUCT FILTER DAMS DOWNSTREAM FROM THE DISTURBED AREAS TO INTERCEPT SEDIMENT FROM OVERLAND RUNOFF, CONCENTRATED FLOW, OR BOTH. DAMS SHOULD BE SIZED TO FILTER A MAXIMUM FLOW RATE OF 60 GPM PER LINEAR FOOT OF DAM WIDTH. A FIVE YEAR STORM FREQUENCY MAY BE USED TO CALCULATE THE FLOW RATE.

11. USE FILTER DAMS IN STREAMS AND CHANNELS. SECURE TO THE STREAM BED AND EMBANKMENT EDGES.

12. SPACE CHECK DAMS ACCORDING TO THE HEIGHT OF THE DAM AND THE SLOPE OF THE CHANNEL SO THAT THE BACKWATER FROM THE DOWNSTREAM DAM REACHES THE TOE OF THE UPSTREAM DAM.

13. NOT TO SCALE.

ORIGINAL STORED AT: ITD, Headquarters 3311 West State Boise, Idaho

ORIGINAL SIGNED BY: J. CALEB LAKEY DATE ORIGINAL SIGNED: FEBRUARY 1, 2013

REVISIONS

NO.	DATE	BY	NO.	DATE	BY	NO.	DATE	BY
1	05-95	MSM						
2	02-96	MSM						
3	10-10	KEH						
4	10-11	KEH						
5	01-13	RDL						

SCALES SHOWN ARE FOR 11" X 17" PRINTS ONLY

CADD FILE NAME: p2b_0213.std

DRAWING DATE: JANUARY, 1994

IDAHO TRANSPORTATION DEPARTMENT

BOISE IDAHO

ORIGINAL SIGNED BY: LOREN THOMAS
HIGHWAYS PROGRAM OVERSIGHT ENGINEER
ORIGINAL SIGNED BY: TOM COLE
CHIEF ENGINEER

STANDARD DRAWING

SEDIMENT CONTROL ROCK CHECK DAM TYPES

REQUIRES STD. DWG. P-2-A

English

STANDARD DRAWING NO.

P-2-B

SHEET 1 OF 1

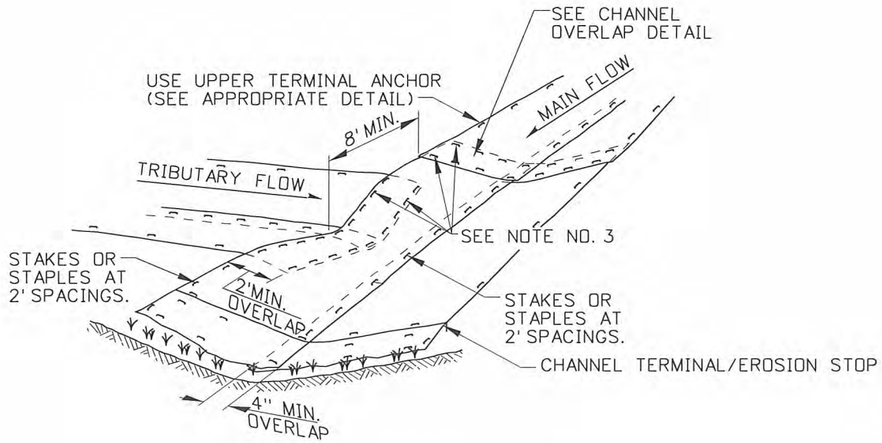

CHANNEL INTERSECTION

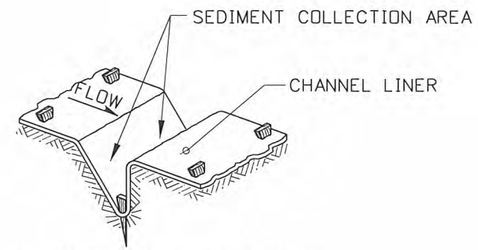

CHANNEL CHECK SLOT

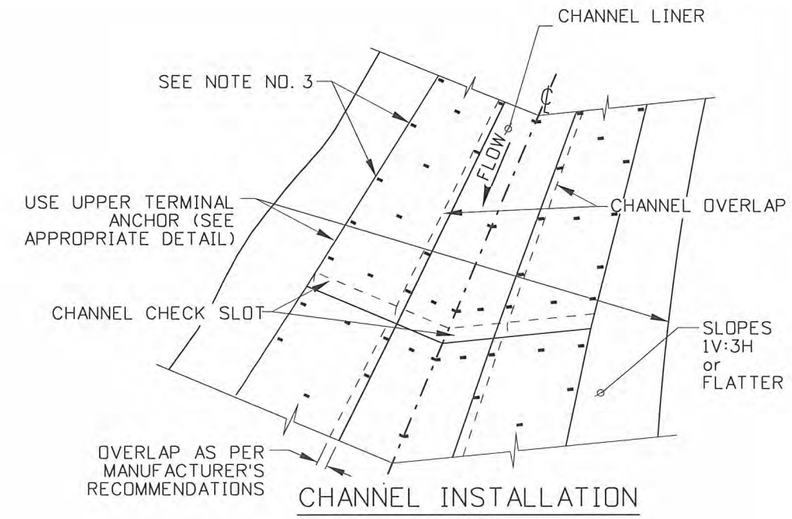

CHANNEL INSTALLATION

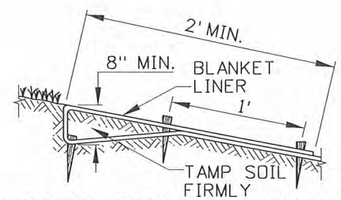

UPPER TERMINAL ANCHOR

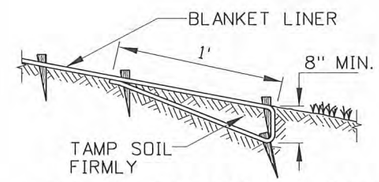

LOWER TERMINAL ANCHOR

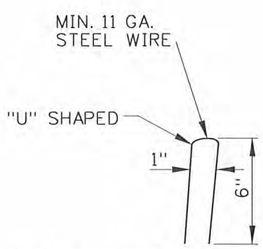

WIRE STAPLE DETAIL

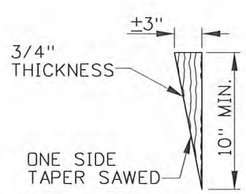

WOODEN STAKE DETAIL

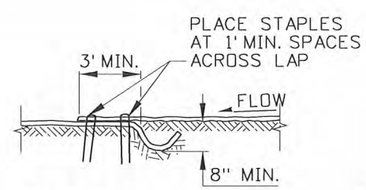

CHANNEL OVERLAP

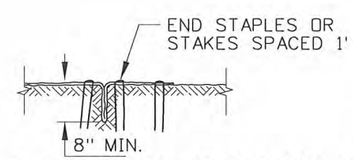

CHANNEL TERMINAL/EROSION STOP

NOTES

1. THE GENERAL NOTES FOR ALL P-2 SERIES STANDARD DRAWINGS (PERMANENT EROSION CONTROL) ARE GIVEN ON STANDARD DRAWING P-2-A (PERMANENT EROSION CONTROL GABIONS & REVET MATTRESSES).

2. ALL EROSION CONTROL MATERIALS SHALL BE AS SPECIFIED OR WILL REQUIRE APPROVAL BY THE ENGINEEER PRIOR TO INSTALLATION.

3. THE LOCATION, SPACING, AND CONFIGURATION OF THE SLOPE OVERLAP, CHANNEL CHECK ANCHOR, UPPER, CHANNEL OVERLAP, AND CHANNEL TERMINAL/EROSION STOP MAY VARY FOR EACH INSTALLATION ACCORDING TO THE MANUFACTURER'S RECOMMENDATIONS.

4. LINERS FOR CHANNEL INSTALLATIONS SHOULD BE INITIALLY PLACED AT THE DOWNSTREAM END AND CONSTRUCTED UPSTREAM.

5. WOOD STAKES SHOULD BE A MINIMUM 10" IN LENGTH WITH ONE EDGE OF THE STAKE TAPERED TO A POINT. SEE THE WOODEN STAKE DETAIL. THE "U" SHAPED WIRE STAPLES ARE TO BE INSTALLED AT 90° TO THE SLOPE PLANE. THE WIRE STAPLES SHOULD BE MADE FROM MINIMUM 11 GAUGE STEEL WIRE. SEE THE "WIRE STAPLE DETAIL".

6. NOT TO SCALE.

REVISIONS								
NO.	DATE	BY	NO.	DATE	BY	NO.	DATE	BY
1	5-95	MSM						
2	2-96	MSM						
3	10-2010	KEH						

SCALES SHOWN ARE FOR 11" X 17" PRINTS ONLY

CADD FILE NAME: p2c_1010.std

DRAWING DATE: DECEMBER, 1994

IDAHO TRANSPORTATION DEPARTMENT

BOISE IDAHO

ASSISTANT CHIEF ENGINEER (DEVELOPMENT)

CHIEF ENGINEER

STANDARD DRAWING

PERMANENT EROSION CONTROL SLOPE & CHANNEL PROTECTION

REQUIRES STD. DWG P-2-A

English

STANDARD DRAWING NO.

P-2-C

SHEET 1 OF 1

PROFESSIONAL ENGINEER LICENSED 14025 10·27·2010 STATE OF IDAHO KARISSA HARDY

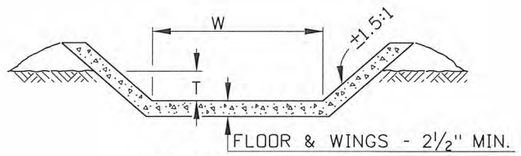

SECTION A-A

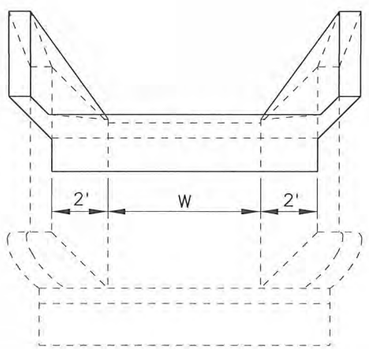

SECTION C-C (INLET)

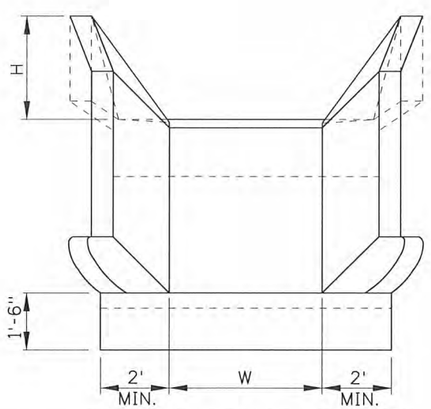

SECTION D-D (OUTLET)

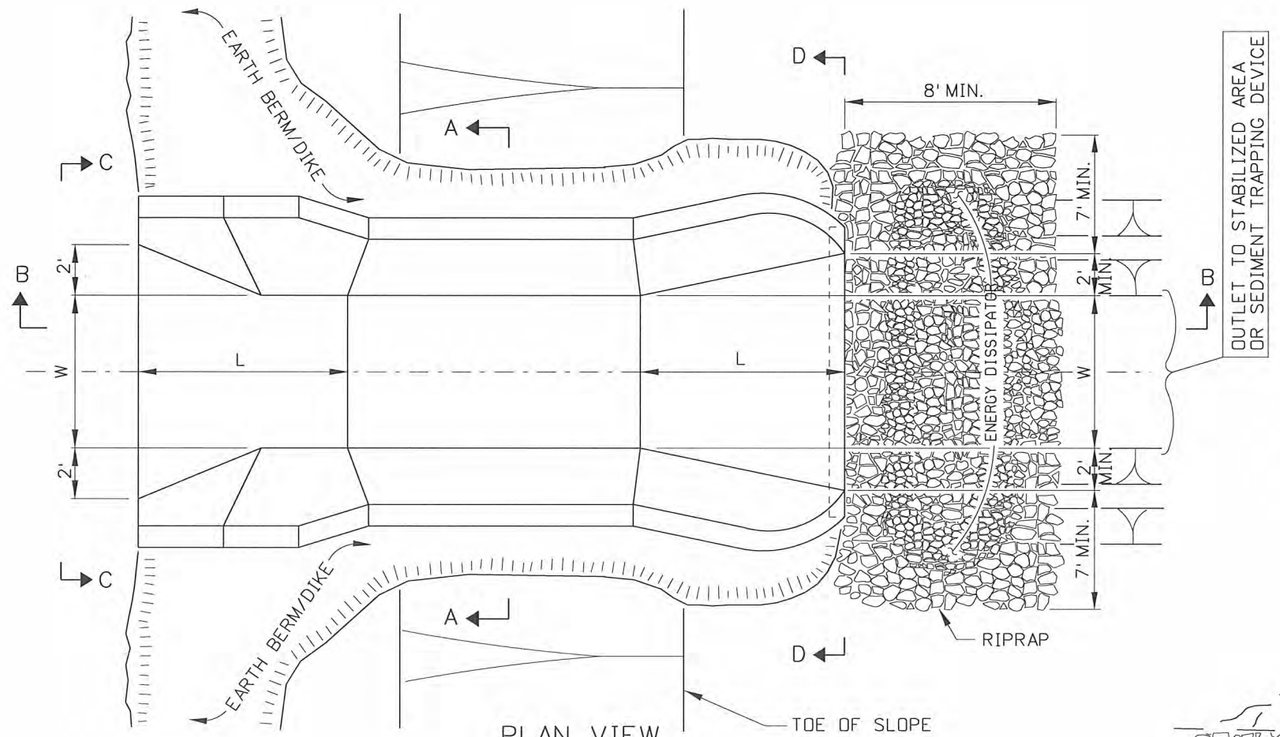

PLAN VIEW

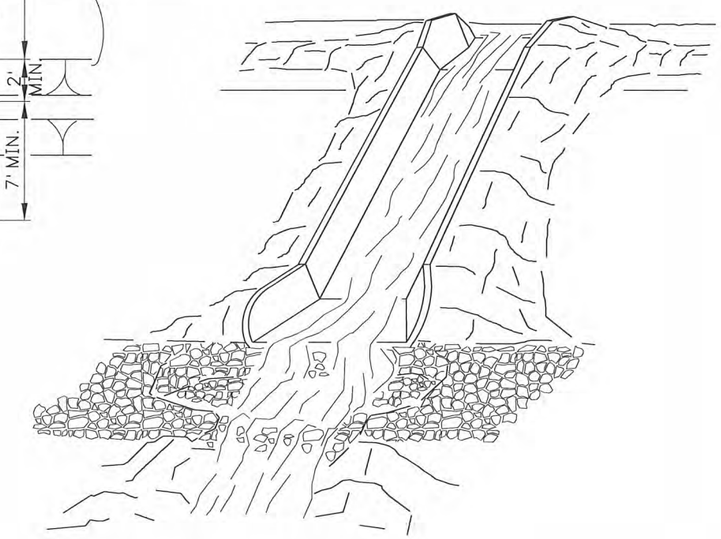

PERSPECTIVE VIEW
(TYPE A OR B)

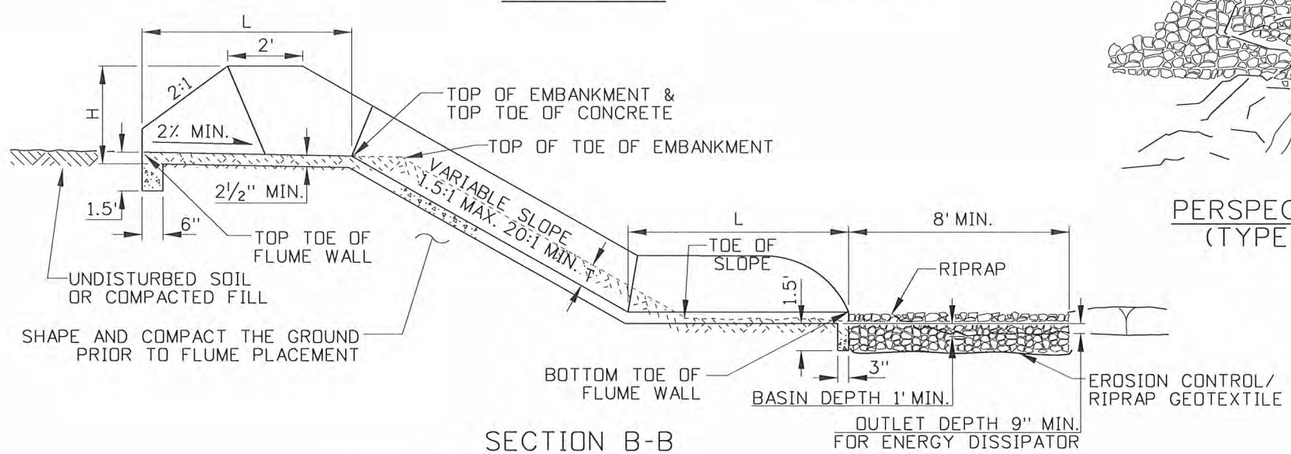

SECTION B-B

CHUTE - TYPE A & B

SEE DESIGN CRITERIA TABLE FOR TYPE A & B CRITERIA

REVISIONS								
NO.	DATE	BY	NO.	DATE	BY	NO.	DATE	BY
1	1-97	MSM						
2	10-2010	KEH						

SCALES SHOWN ARE FOR 11" X 17" PRINTS ONLY

CADD FILE NAME: p2d_1010.std

DRAWING DATE: FEBRUARY, 1996

IDAHO TRANSPORTATION DEPARTMENT

BOISE IDAHO

ASSISTANT CHIEF ENGINEER (DEVELOPMENT)

CHIEF ENGINEER

STANDARD DRAWING

CHUTES AND FLUMES

REQUIRES SHEET 2 OF 2 & STD. DWG. P-2-A

English

STANDARD DRAWING NO.

P-2-D

SHEET 1 OF 2

PROFESSIONAL ENGINEER LICENSED Karissa Hardy 14025 10-27-2010 STATE OF IDAHO KARISSA HARDY

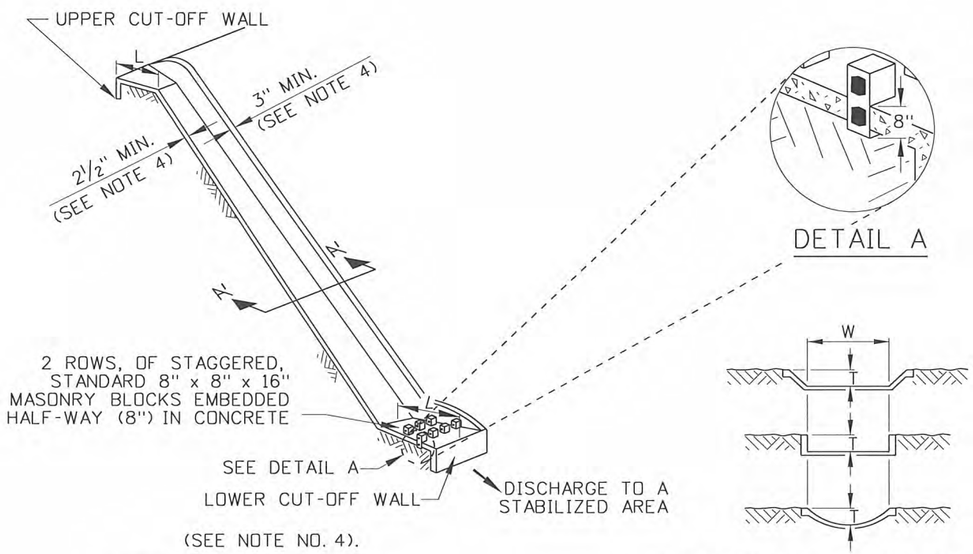

PAVED FLUME - TYPE C

DESIGN CRITERIA TABLE					
TYPE	W BOTTOM WIDTH	H MIN.	T MIN.	L MIN.	MAXIMUM DRAINAGE AREA
A-2	2'	1.5'	8"	5'	5 ACRES
A-4	4'	1.5'	8"	5'	8 ACRES
A-6	6'	1.5'	8"	5'	11 ACRES
A-8	8'	1.5'	8"	5'	14 ACRES
A-10	10'	1.5'	8"	5'	18 ACRES
B-4	4'	2'	10"	6'	14 ACRES
B-6	6'	2'	10"	6'	20 ACRES
B-8	8'	2'	10"	6'	25 ACRES
B-10	10'	2'	10"	6'	31 ACRES
B-12	12'	2'	10"	6'	36 ACRES
C-(n)	n = 1' - 2'	N/A	6"	2' - 5'	>5 ACRES

NOTES

1. THE GENERAL NOTES FOR ALL P-2 SERIES STANDARD DRAWINGS (PERMANENT EROSION CONTROL) ARE GIVEN ON STANDARD DRAWING P-2-A (PERMANENT EROSION CONTROL GABIONS & REVET MATTRESSES).

2. A PAVED FLUME MAY BE CONSTRUCTED TO DRAIN CONCENTRATED SURFACE RUNOFF SAFELY DOWN SLOPES WITHOUT CAUSING EROSION. THE DRAINAGE AREA CONTRIBUTING RUNOFF TO A PAVED FLUME SHOULD NOT EXCEED THAT GIVEN IN THE DESIGN CRITERIA ABOVE. THE PAVED FLUME SHOULD BE SIZED TO DRAIN THE PEAK RATE OF RUNOFF WITHOUT OVERTOPPING AT THE EARTH DIKE ENTRANCE. A 25 YEAR STORM DRAIN FREQUENCY MAY BE USED TO CALCULATE THE FLOW RATE.

3. THE TYPE IS A DESIGNATOR FOR THE DIMENSIONS OF THE PAVED FLUME. THE TYPE IS DESIGNATED BY A LETTER (A, B, OR C), A DASH, AND FOLLOWED BY THE NUMERICAL BOTTOM WIDTH (W). THE APPROPRIATE SIZE (TYPE) SHOULD BE INDICATED ON THE PLANS.

4. TYPE C PAVED FLUMES REQUIRE A MINIMUM FLOOR THICKNESS OF 2½". THE WING WALL ENDS AND UPPER/LOWER CUT-OFF WALL REQUIRE A MINIMUM THICKNESS OF 3".

5. NOT TO SCALE.

REVISIONS								
NO.	DATE	BY	NO.	DATE	BY	NO.	DATE	BY
①	1-97	MSM						
②	10-2010	KEH						

SCALES SHOWN ARE FOR 11" X 17" PRINTS ONLY

CADD FILE NAME: p2d_1010.std

DRAWING DATE: FEBRUARY, 1996

IDAHO TRANSPORTATION DEPARTMENT

BOISE IDAHO

ASSISTANT CHIEF ENGINEER (DEVELOPMENT)

CHIEF ENGINEER

STANDARD DRAWING

CHUTES AND FLUMES

REQUIRES SHEET 1 OF 2 & STD. DWG. P-2-A

English

STANDARD DRAWING NO.

P-2-D

SHEET 2 OF 2

PROFESSIONAL ENGINEER LICENSED 14025 10-27-2010 STATE OF IDAHO KARISSA HARDY

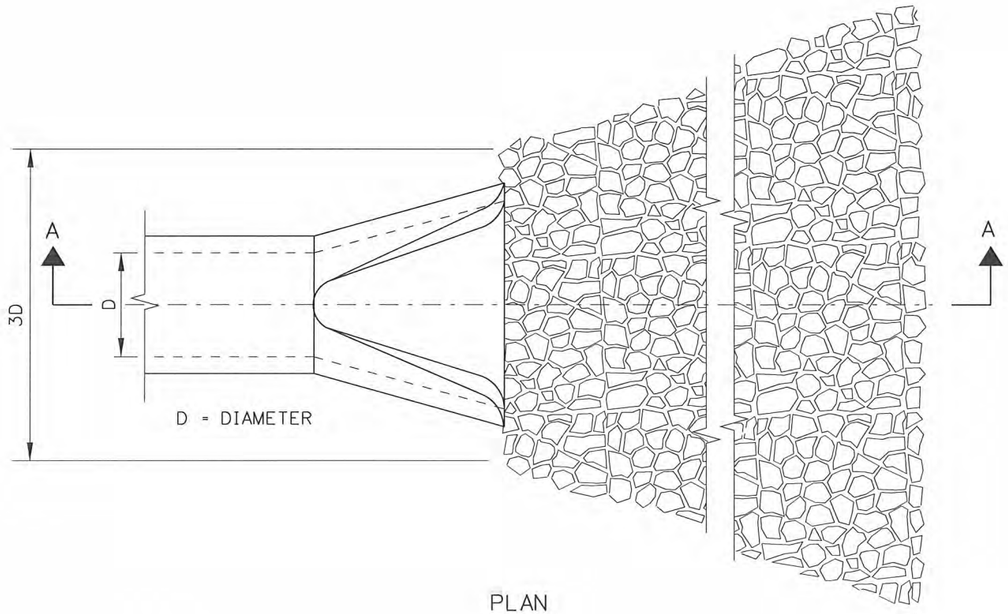

PLAN

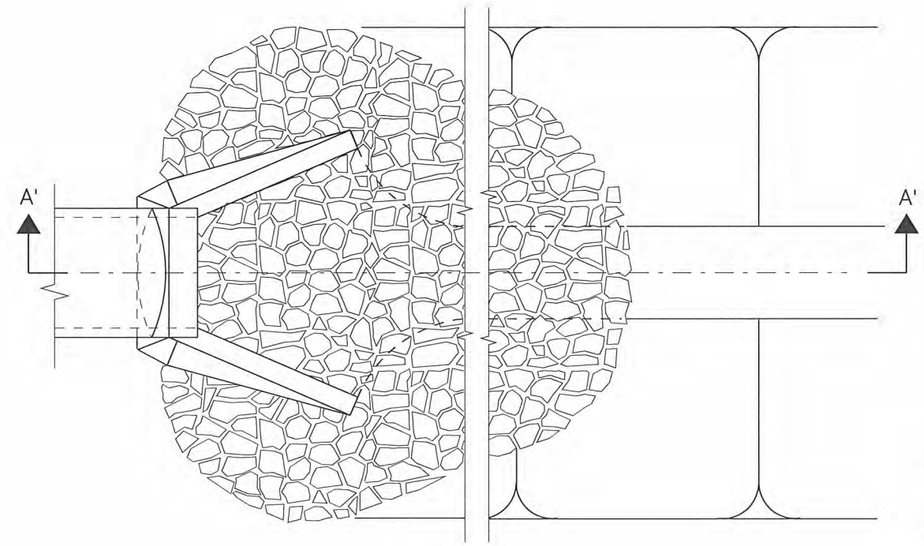

PLAN

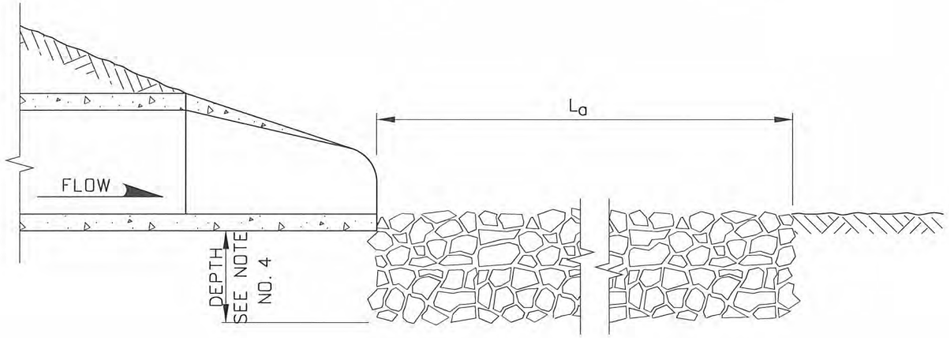

SECTION A-A

PIPE OUTLET TO FLAT AREA

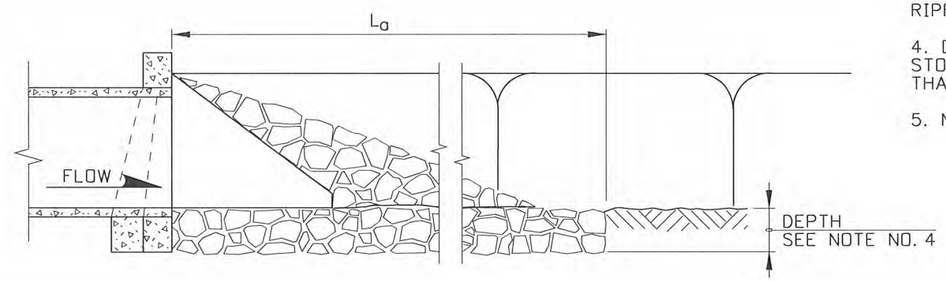

SECTION A'-A'

PIPE OUTLET TO STABILIZED CHANNEL

NOTES

1. THE GENERAL NOTES FOR ALL P-2 SERIES STANDARD DRAWINGS (PERMANENT EROSION CONTROL) ARE GIVEN ON STANDARD DRAWING P-2-A (PERMANENT EROSION CONTROL GABIONS & REVET MATTRESSES).

2. THE APRON LINING MAY BE RIPRAP, GROUTED RIPRAP, OR CONCRETE.

3. L_a IS THE LENGTH OF THE RIPRAP APRON.

4. DEPTH = 1.5 TIMES THE MAXIMUM STONE DIAMETER BUT NOT LESS THAN 6 INCHES.

5. NOT TO SCALE.

REVISIONS								
NO.	DATE	BY	NO.	DATE	BY	NO.	DATE	BY
1	10-2010	KEH						

SCALES SHOWN ARE FOR 11" X 17" PRINTS ONLY

CADD FILE NAME: p2f_1010.std

DRAWING DATE: FEBRUARY, 1996

IDAHO TRANSPORTATION DEPARTMENT

BOISE IDAHO

ASSISTANT CHIEF ENGINEER (DEVELOPMENT)

CHIEF ENGINEER

STANDARD DRAWING

PERMANENT EROSION CONTROL
CULVERT OUTLET PROTECTION

REQUIRES STD. DWG. P-2-A

English

STANDARD DRAWING NO.

P-2-F

SHEET 1 OF 1

PROFESSIONAL ENGINEER LICENSED 14025 10·27·2010 STATE OF IDAHO KARISSA HARDY

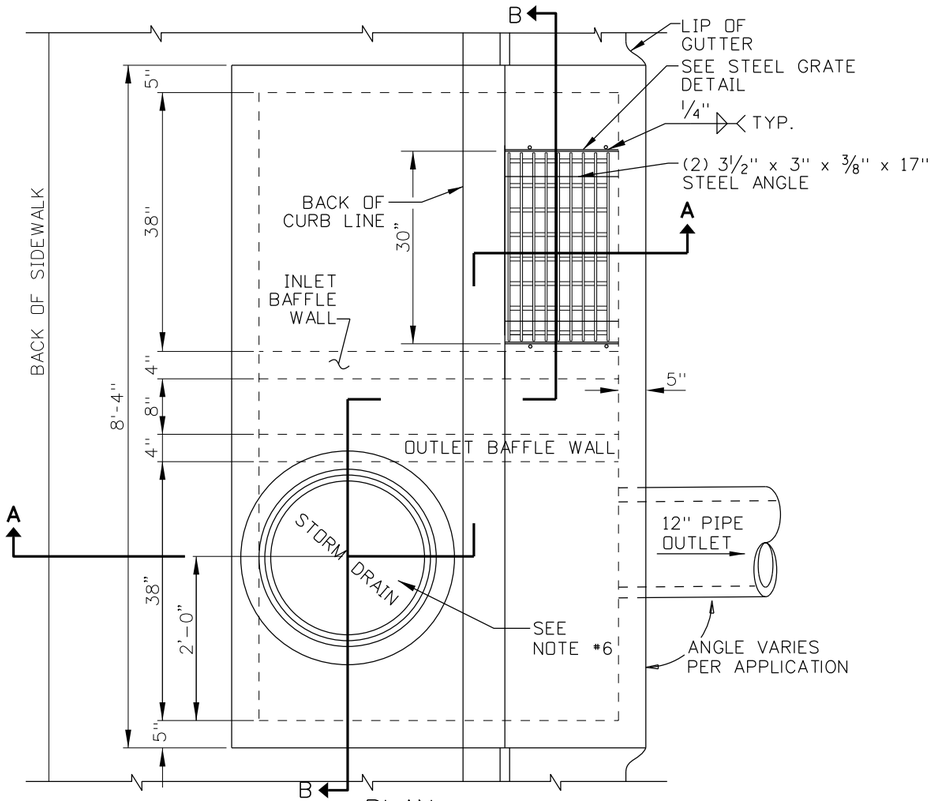

PLAN

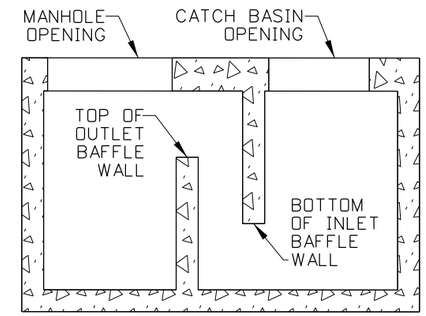

SECTION B-B

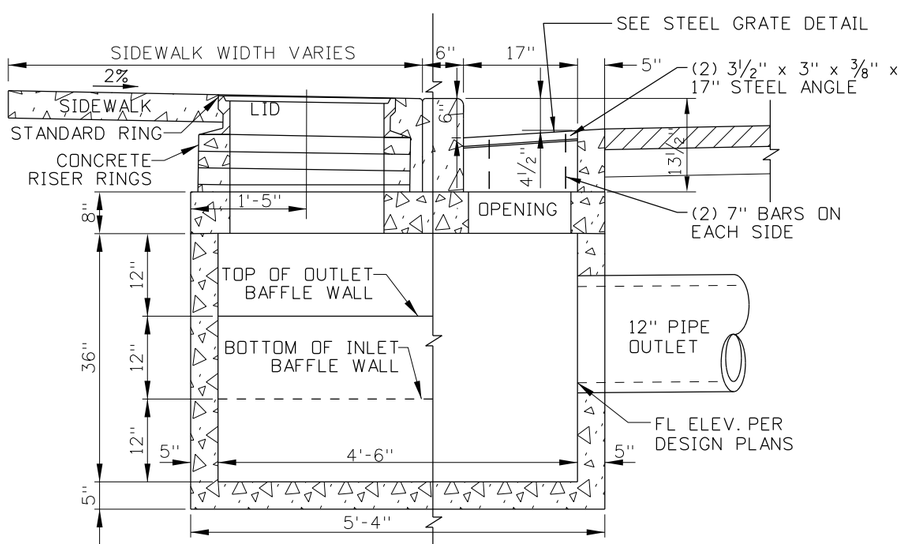

SECTION A-A

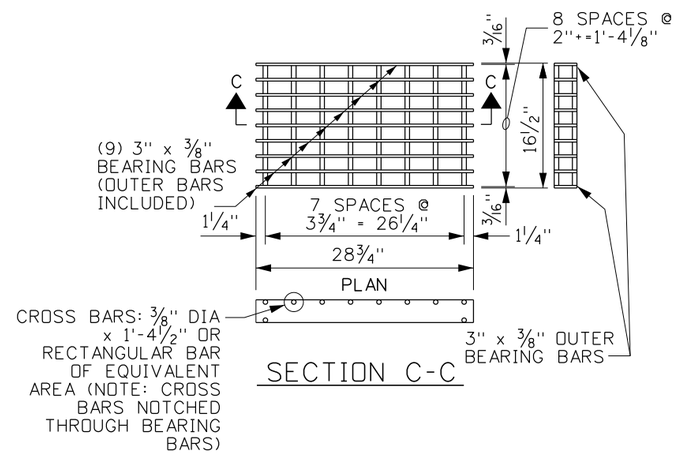

SECTION C-C

STEEL GRATE

(WEIGHT: APPROXIMATELY 88 LBS., SEE NOTE 9 & 10)

NOTES

1. SEDIMENT CONTROL BOXES CAN BE EITHER PRECAST OR CAST-IN-PLACE. DETAILED DRAWING OF SEDIMENT CONTROL BOX SHALL BE SUBMITTED AND APPROVED BY THE ENGINEER PRIOR TO CONSTRUCTION.

2. CAST-IN-PLACE BOXES SHALL CONFORM TO SECTION 609 - MINOR STRUCTURES OF THE CURRENT ITD STANDARD SPECIFICATIONS FOR HIGHWAY CONSTRUCTION.

3. DESIGN LOAD SHALL MEET AASHTO H-25 HIGHWAY LOADING AND CLASS 4000 PSI CONCRETE.

4. ALL REINFORCING STEEL SHALL BE GRADE 60.

5. THE FINISHED TOP OF CONCRETE SHALL BE EVEN WITH THE GRATE SURFACE.

6. THE CATCH BASIN MANHOLE FRAME AND COVER SHALL BE A FLUSH MOUNT TYPE WITH A FRAME NO DEEPER THAN 4". THE FLUSH MOUNT MANHOLE IS NOT PERMITTED FOR VEHICULAR TRAFFIC.

7. TANK CAPACITY IS APPROXIMATELY 750 GALLONS OR 100 CUBIC FEET.

8. DESIGN MAY BE REVERSED FOR BEST APPLICATION WITH MANHOLE AND CATCH BASIN OPENINGS IN OPPOSITE DIRECTIONS AND BAFFLE WALLS REVERSED.

9. GRAY IRON CAST TO THE DIMENSIONS GIVEN FOR THE STEEL GRATES MAY BE USED. THE CASTINGS SHALL CONFORM TO AASHTO M306 CLASS 35B GRAY IRON CASTINGS.

10. INLET/CATCH BASIN GRATES MAY EITHER BE RESISTANCE WELED OR ARC WELDED. IN EITHER CASE THE GRATE SHALL BE TRUE AND FLUSH.

11. NOT TO SCALE.

ORIGINAL STORED AT: ITD, Headquarters 3311 West State Boise, Idaho

ORIGINAL SIGNED BY: KARISSA HARDY DATE ORIGINAL SIGNED: OCTOBER 3, 2011

REVISIONS								
NO.	DATE	BY	NO.	DATE	BY	NO.	DATE	BY
1	2-1996	MSM						
2	10-2011	KEH						

SCALES SHOWN ARE FOR 11" X 17" PRINTS ONLY

CADD FILE NAME: p3a_1011.std

DRAWING DATE: JANUARY, 1994

IDAHO TRANSPORTATION DEPARTMENT

BOISE IDAHO

ORIGINAL SIGN BY: LOREN THOMAS
HIGHWAYS PROGRAM OVERSIGHT ENGINEER
ORIGINAL SIGN BY: TOM COLE
CHIEF ENGINEER

STANDARD DRAWING

SEDIMENT CONTROL BOX (CATCH BASIN)

English

STANDARD DRAWING NO.

P-3-A

SHEET 1 OF 1

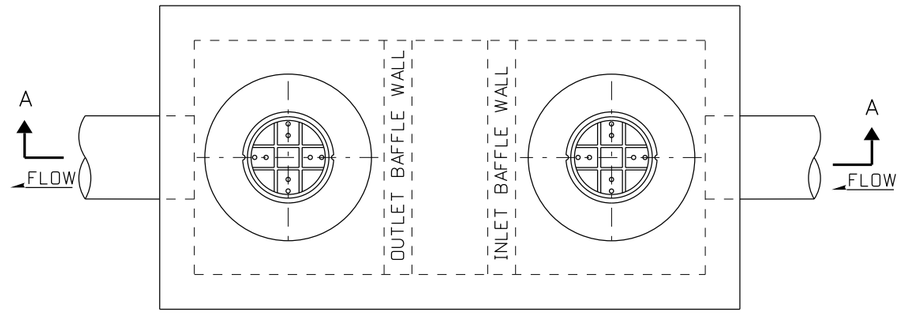

PLAN

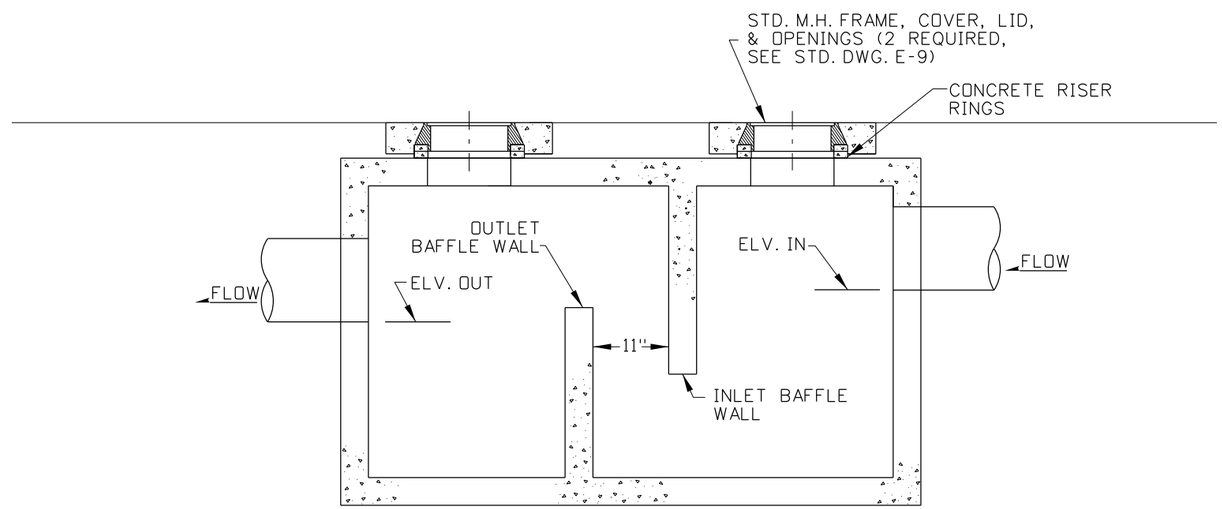

SECTION A-A

SAND AND OIL TRAP

NOTES

1. SEDIMENT & OIL TRAPS MAY BE EITHER PRECAST OR CAST-IN-PLACE. PRECAST TRAPS SHALL MEET THE REQUIREMENTS OF ASTM C 478 AND SHALL HAVE A DESIGN LOAD MEETING AASHTO HS-25 HIGHWAY LOADING.

2. ALL REINFORCING STEEL SHALL BE GRADE 60.

3. CAST-IN-PLACE SEDIMENT & OIL TRAPS SHALL CONFORM TO SECTION 609 - MINOR STRUCTURES OF THE CURRENT ITD STANDARD SPECIFICATIONS FOR HIGHWAY CONSTRUCTION. DETAILED DRAWING OF PRECAST BOX OR CAST-IN-PLACE BOX DESIGN MUST BE APPROVED BY THE ENGINEER PRIOR TO CONSTRUCTION.

4. FOR DETAILS ON MANHOLE INSTALLATION REFER TO STANDARD DRAWING E-9 (STANDARD MANHOLE FRAME, COVER, & CONCRETE COLLAR.

5. HEIGHT OF OUTLET BAFFLE WALL AND LENGTH OF INLET BAFFLE WALL DETERMINED BY TANK CAPACITY AND FLOW RATE.

6. IF DISTANCE FROM TOP OF BOX TO BOTTOM OF MANHOLE FORM EXCEEDS 12" USE PRECAST MANHOLE RISER PLUS A MAXIMUM OF 12" OF RISER GRADE RINGS.

7. PROVIDE STEPS WHEN THE DISTANCE FROM TOP OF MANHOLE FRAME TO TOP OF BOX EXCEEDS 24".

8. CONCRETE RISER RINGS (MAX 24"). FOR VAULT DEPTH GREATER THAN 24", USE PRECAST MANHOLE SECTIONS.

9. LOCATION AND FLOW LINE ELVATION PER DESIGN PLANS.

10. ELV. IN > ELV. OF TOP OF OUTLET BAFFLE WALL BY A MINIMUM OF 0.1', UNLESS OTHERWISE APPROVED BY THE ENGINEER.

11. ELV. OUT < ELV OF TOP OF OUTLET BAFFLE WALL BY A MINIMUM OF 0.25', UNLESS OTHERWISE APPROVED BY THE ENGINEER.

12. NOT TO SCALE.

ORIGINAL STORED AT: ITD, Headquarters 3311 West State Boise, Idaho

ORIGINAL SIGNED BY: KARISSA HARDY DATE ORIGINAL SIGNED: OCTOBER 3, 2011

REVISIONS

NO.	DATE	BY	NO.	DATE	BY	NO.	DATE	BY
1	10-2011	KEH						

SCALES SHOWN ARE FOR 11" X 17" PRINTS ONLY

CADD FILE NAME: p3b_1011.std

DRAWING DATE: JUNE, 1996

IDAHO TRANSPORTATION DEPARTMENT

BOISE IDAHO

HIGHWAYS PROGRAM OVERSIGHT ENGINEER

CHIEF ENGINEER

STANDARD DRAWING

WATER POLLUTION CONTROL SEDIMENT & OIL TRAP

REFER TO STD. DWG. E-9

English

STANDARD DRAWING NO.

P-3-B

SHEET 1 OF 1

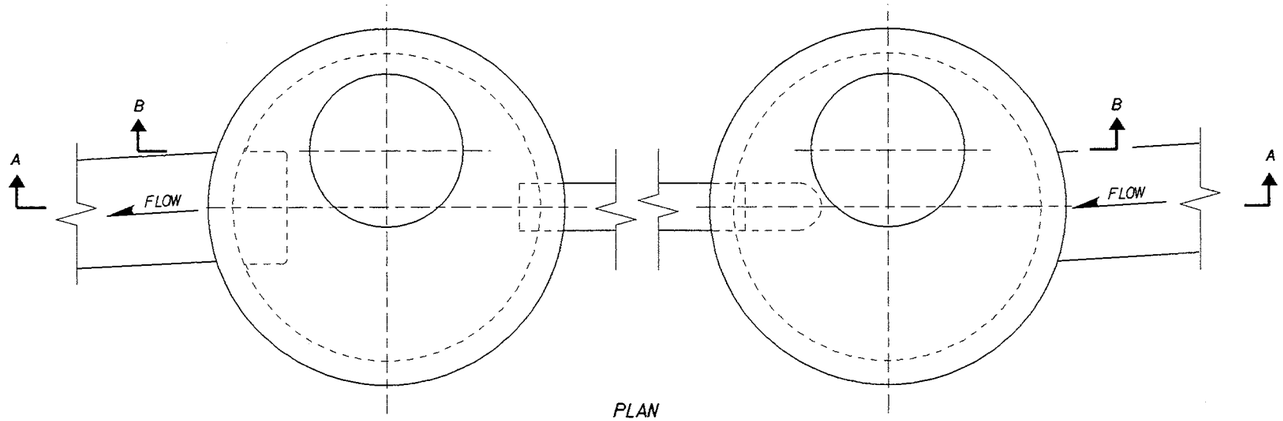

PLAN

TOP ELEVATION - SECTION B-B

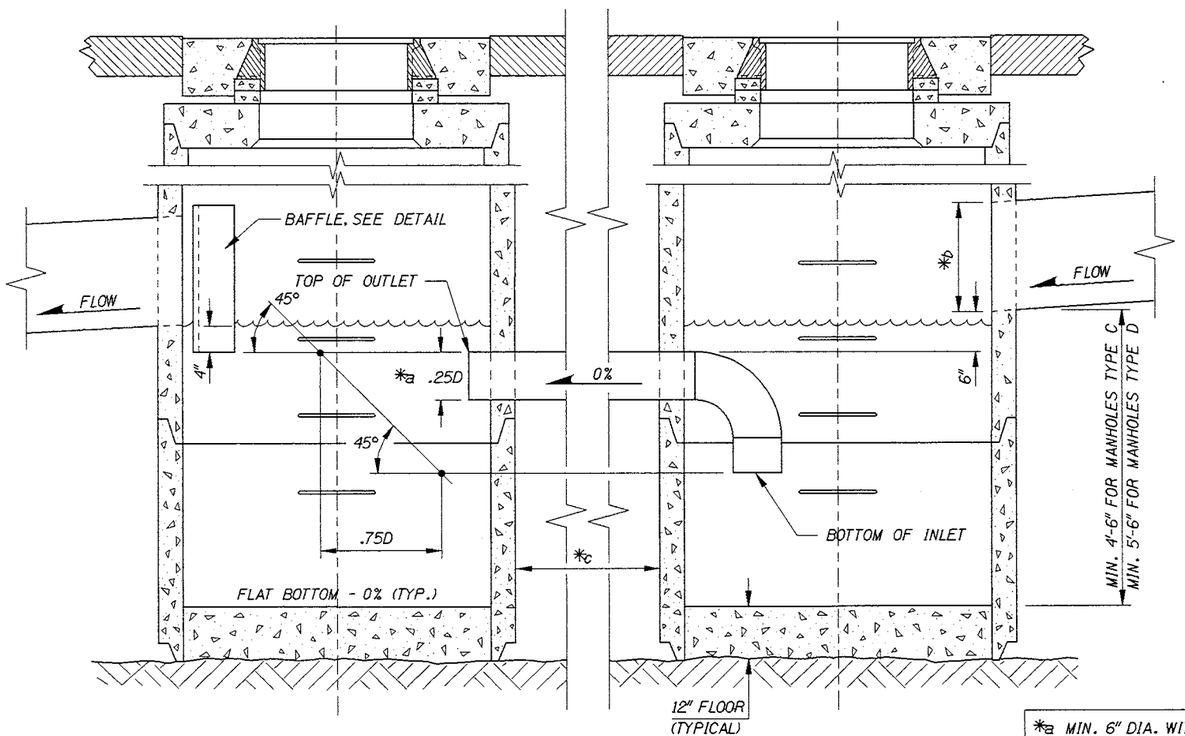

BOTTOM ELEVATION - SECTION A-A

SEDIMENT & OIL TRAP

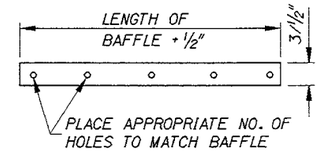

*e (2) REQUIRED (SEE NOTE NO. 5)

GASKET DETAIL

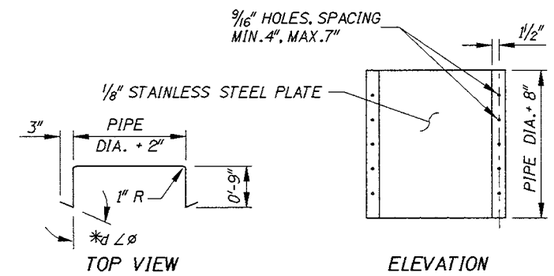

BAFFLE DETAIL

BAFFLE LIP ANGLE TABLE		
PIPE SIZE	BEND ANGLE (ø)	
	MANHOLE C (48")	MANHOLE D (60")
12"	±70°	±75°
15"	±65°	±70°
18"	±60°	±65°
24"	±55°	±60°
30"	±45°	±55°
36"	±30°	±45°

*a MIN. 6" DIA. WITH MANHOLE TYPE C
MIN. 8" DIA. WITH MANHOLE TYPE D

*b MAX. 24" DIA. PIPE WITH MANHOLE TYPE C
MAX. 36" DIA. PIPE WITH MANHOLE TYPE D

*c SEE NOTE NO. 4

*d SEE BAFFLE LIP ANGLE TABLE
cos ø = ((OUTLET PIPE DIA.) + 5")/MANHOLE DIA.

*e BAFFLE REQUIRES TWO GASKETS

NOTES

1. CARE SHALL BE TAKEN TO AVOID PLACING THE MANHOLE OPENINGS IN WHEEL PATHS.
2. SEDIMENT AND OIL TRAPS MAY BE EITHER PRECAST OR CAST-IN-PLACE. PRECAST TRAPS SHALL MEET THE REQUIREMENTS OF ASTM C 478. PRIOR APPROVAL OF THE SHOP DRAWING WILL BE REQUIRED ON PRECAST UNITS.
3. CAST-IN-PLACE SEDIMENT & OIL TRAPS SHALL CONFORM WITH SECTION 609 - MINOR STRUCTURES OF THE CURRENT STANDARD SPECIFICATIONS. ALL REINFORCEMENT SHALL HAVE A MINIMUM CONCRETE COVER OF 2" AND/OR 3" IF CAST AGAINST EARTH.
4. MAXIMUM SPACING BETWEEN MANHOLES SHALL BE 20' FOR TYPE C MANHOLES AND 30' FOR TYPE D MANHOLES.
5. THE BAFFLE SHALL BE INSTALLED SO THAT THE EDGES ARE WATER-TIGHT TO THE STRUCTURE. THE GASKET SHALL BE MADE OF A WATER AND OIL RESISTANT MATERIAL.
6. STANDARD DRAWING E-7-C SHALL ACCOMPANY THIS DRAWING. REFER TO STANDARD DRAWING E-9 FOR MANHOLE COVERS.
7. NOT TO SCALE.

PROFESSIONAL ENGINEER - LAND SURVEYOR
REGISTERED
2240
12-21-95
STATE OF IDAHO
MILFORD L. MILLER

REVISIONS											
NO.	DATE	BY	NO.	DATE	BY	NO.	DATE	BY	NO.	DATE	BY

CADD FILE NO. p3d_1295.std

DRAWING DATE: DECEMBER, 1995

IDAHO TRANSPORTATION DEPARTMENT

BOISE, IDAHO

CHIEF OF HIGHWAY OPERATIONS

CHIEF ENGINEER

STANDARD DRAWING

WATER POLLUTION CONTROL IN STREET SEDIMENT & OIL TRAP

REQUIRES STD. DWG. E-7-C & REFER TO STD. DWG. E-9

FORM CATALOG NUMBER

STANDARD DRAWING NO.

P-3-D

SHEET 1 OF 1

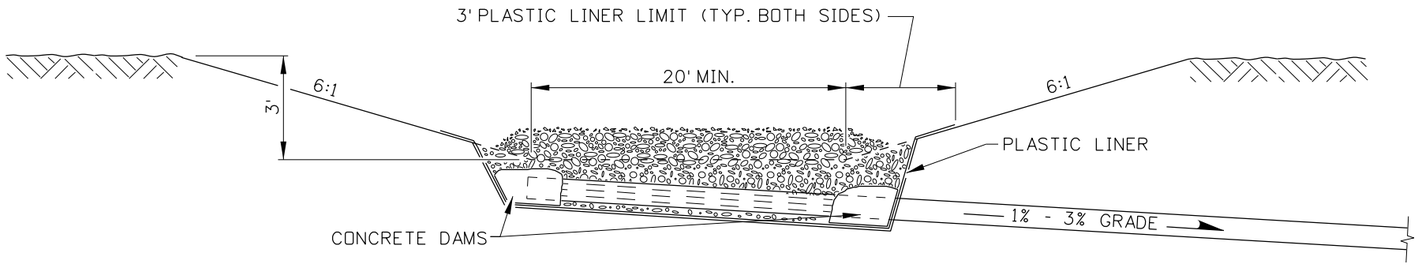

SECTION A-A

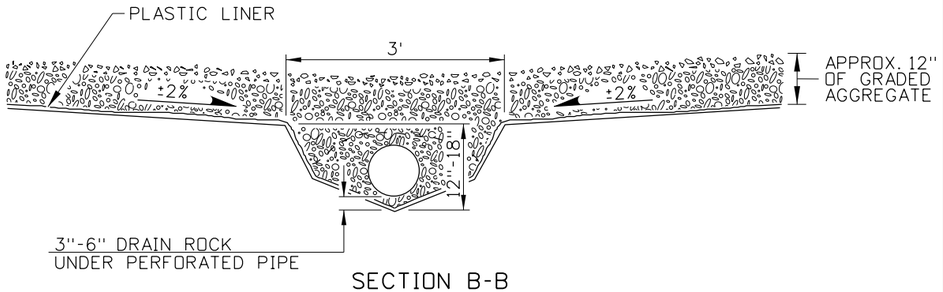

SECTION B-B

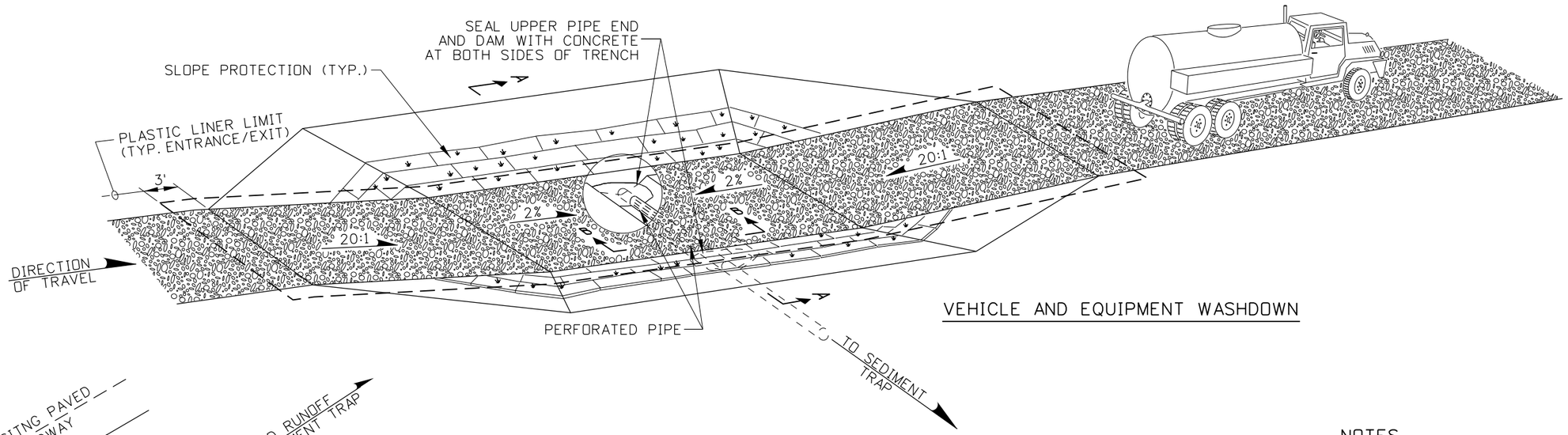

VEHICLE AND EQUIPMENT WASHDOWN

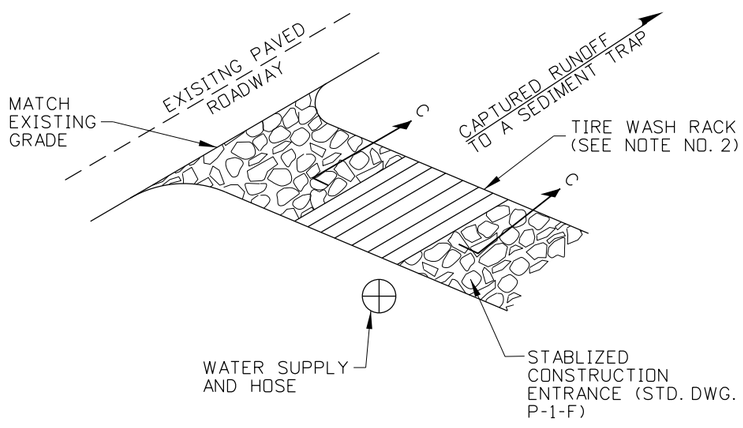

TIRE WASH RACK

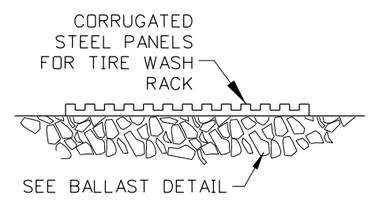

SECTION C-C

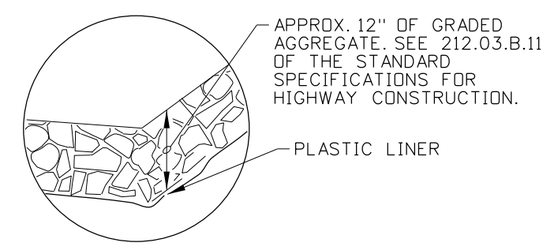

BALLAST DETAIL
VEHICLE AND EQUIPMENT WASHDOWN

NOTES

1. DIRECT VEHICLE AND EQUIPMENT WASHDOWN OUTFLOW TO A SEDIMET TRAP.

2. USE TIRE WASH RACK IN CONJUNCTION WITH A STABILIZED CONSTRUCTION ENTRANCE. WHEN TIRE WASH RACK IS USED, SEDIMENT MUST BE ROUTED TO A SEDIMENT TRAP. OBTAIN THE ENGINEER'S APPROVAL OF PRE-FEBRICATED TIRE WASH RACKS PRIOR TO INSTALLATION.

3. NOT TO SCALE.

ORIGINAL STORED AT: ITD, Headquarters 3311 West State Boise, Idaho

ORIGINAL SIGNED BY: J. CALEB LAKEY DATE ORIGINAL SIGNED: DECEMBER 17, 2012

REVISIONS

NO.	DATE	BY	NO.	DATE	BY	NO.	DATE	BY
1	9-98	MSM						
2	10-10	KEH						
3	6-11	KEH						
4	12-12	RDL						

SCALES SHOWN ARE FOR 11" X 17" PRINTS ONLY

CADD FILE NAME: p3e_1212.std

DRAWING DATE: DECEMBER, 1995

IDAHO TRANSPORTATION DEPARTMENT

BOISE IDAHO

ORIGINAL SIGNED BY: LOREN THOMAS
HIGHWAYS PROGRAM OVERSIGHT ENGINEER
ORIGINAL SIGNED BY: TOM COLE
CHIEF ENGINEER

STANDARD DRAWING

VEHICLE AND EQUIPMENT WASHDOWN

REQUIRES STD. DWG. P-1-D

English

STANDARD DRAWING NO.

P-3-E

SHEET 1 OF 1

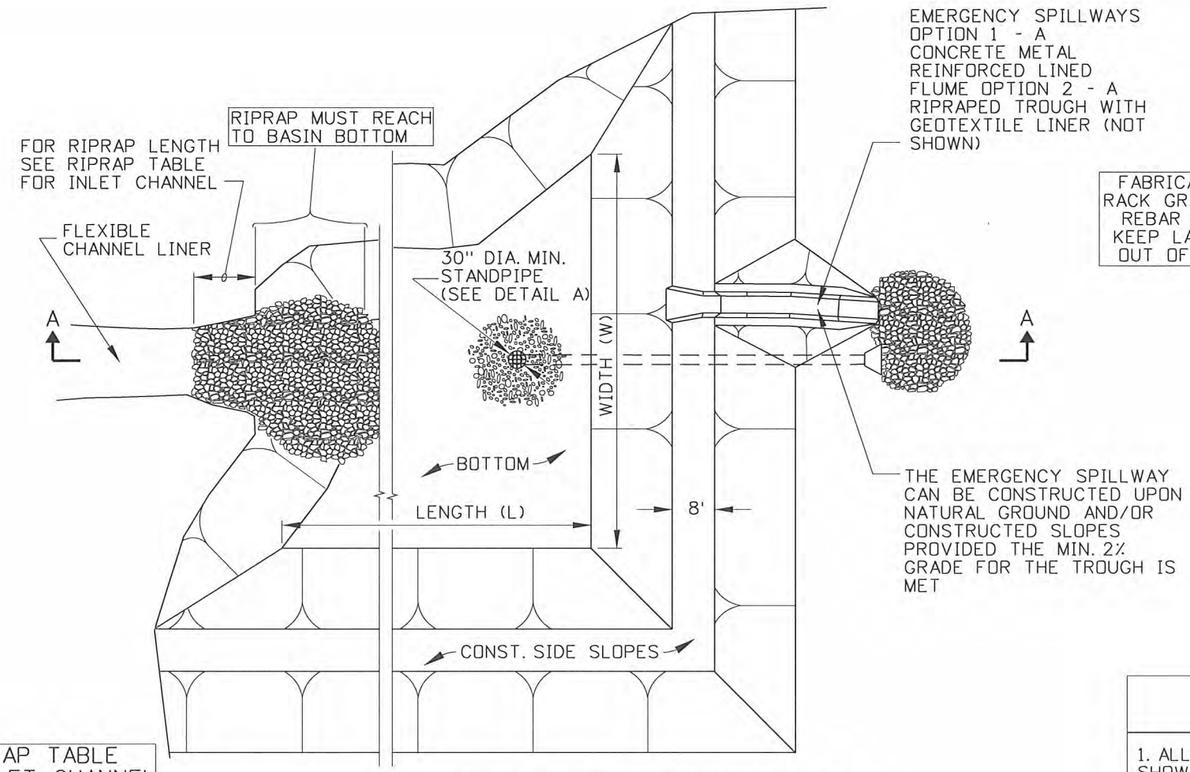

PLAN - RETENTION BASIN

(SPILLWAY OPTION 1 SHOWN)

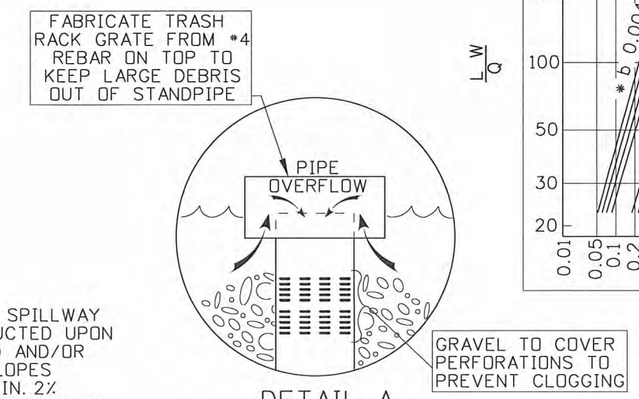

DETAIL A

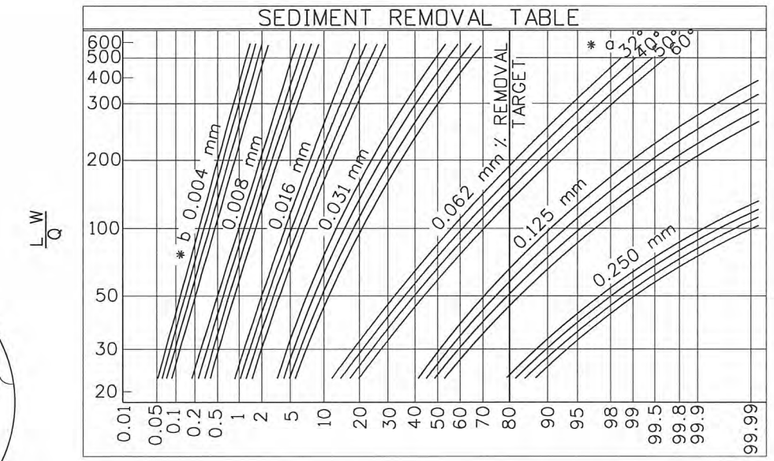

RIPRAP TABLE FOR INLET CHANNEL

CHANNEL SLOPE %	LENGTH	DEPTH
1	10'	1.0'
2	15'	1.0'
3	20'	1.5
4	25'	2.0'
5	30'	3.0'

GENERAL NOTES FOR SEDIMENT CONTROL

1. ALL SEDIMENT CONTROL MEASURES SHOWN ON P-4 SERIES STANDARD DRAWINGS SHALL BE USED IN CONJUNCTION WITH THE ITD EROSION AND SEDIMENT CONTROL- BEST MANAGEMENT PRACTICES MANUAL (BMP).

2. SITE DIMENSIONS, PLACEMENT, AND PAYMENT FOR SEDIMENT CONTROL MEASURES SHALL BE AS SET FORTH IN THE PLANS AND SPECIAL PROVISIONS.

3. THE NEED FOR EROSION & SEDIMENT CONTROL MEASURES SHALL BE DETERMINED BY SITE DESIGN. ADJUSTMENTS TO THOSE MEASURES SHALL REQUIRE APPROVAL BY THE ENGINEER.

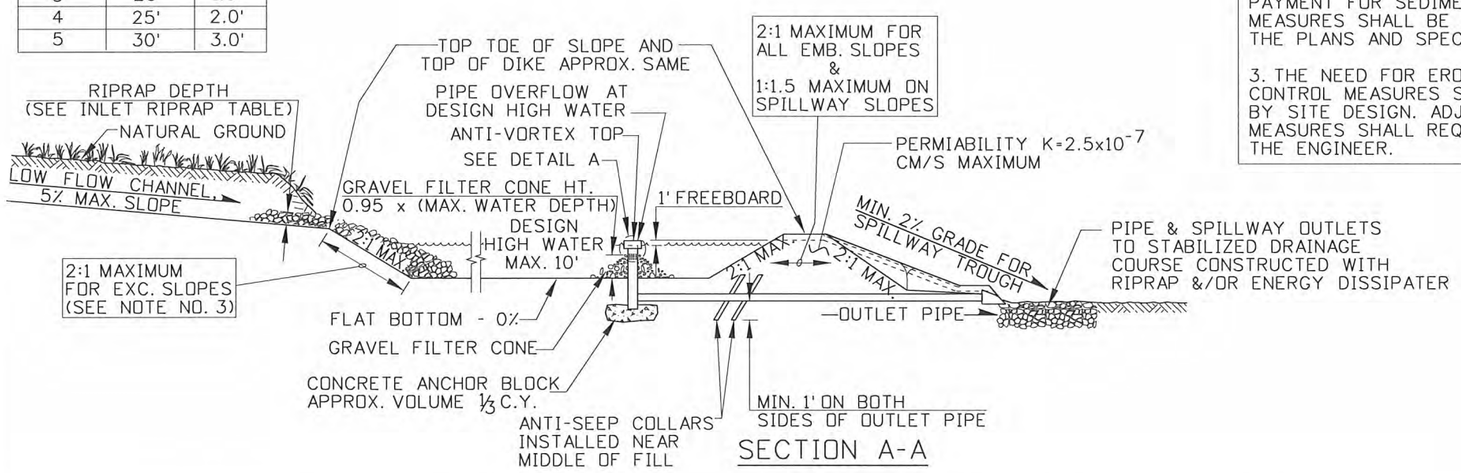

SECTION A-A

NOTES

1. SEE THE GENERAL NOTES FOR SEDIMENT CONTROL.

2. THE CRITERIA FOR OPTIMAL LOCATION OF RETENTION BASINS ARE:
   A. LOCATE BASIN ON OR ADJACENT TO THE HIGHWAY RIGHT-OF-WAY.
   B. PLACE BASIN IN A NATURAL SWALE, USING NATURAL SLOPES SO THAT ONLY THE FRONTAL DIKE NEED BE CONSTRUCTED.
   C. LOCATE AND CONSTRUCT SO THAT EXCAVATION AND EMBANKMENT QUANTITIES WILL BE REASONABLY BALANCED.

3. WHEN AMPLE SPACE IS AVAILABLE USE THE NATURAL SLOPES TO CONSTRUCT RETENTION BASINS. EXCAVATED SLOPES FOR RETENTION BASINS SHALL BE CONSTRUCTED WITH GENTLE SLOPES AS TO PREVENT FURTHER EROSION OR SLOUGHING INSIDE THE BASIN. THE TOP TOE OF THE EXCAVATED SLOPE SHALL BE NO HIGHER THAN THE TOP OF THE BASIN DIKE PORTION.

4. RETENTION BASINS SHALL BE CONSTRUCTED AT LOCATIONS AS SHOWN ON THE PLANS. THE BASIN DIMENSIONS, CAPACITY, AND FLOW GRADES SHALL BE DETERMINED BY DESIGN. THE FINAL DESIGN OF ALL RETENTION BASINS SHALL BE APPROVED BY THE ITD HYDRAULICS ENGINEER AND ITD MATERIALS/GEOTECHNICAL ENGINEER.

5. IT IS RECOMMENDED THAT THE LENGTH (L) OF A RETENTION BASIN BE (10) TEN TIMES THE WIDTH (W).

6. THE CAPACITY OF A RETENTION BASIN SHALL NOT EXCEED 50 ACRE FEET OR A DRAINAGE AREA IN EXCESS OF 150 ACRES.

7. DIKE MUST BE COMPACTED TO A MINIMUM OF 95% OF STANDARD DENSITY. DIKE MUST BE CONSTRUCTED OF IMPERMIABLE MATERIAL.

8. ACCESS FOR SEDIMENT REMOVAL MUST BE PROVIDED.

9. NOT TO SCALE.

REVISIONS								
NO.	DATE	BY	NO.	DATE	BY	NO.	DATE	BY
1	9-98	MSM						
2	10-2010	KEH						

SCALES SHOWN ARE FOR 11" X 17" PRINTS ONLY

CADD FILE NAME: p4a_1010.std

DRAWING DATE: FEBRUARY, 1996

IDAHO TRANSPORTATION DEPARTMENT

BOISE IDAHO

ASSISTANT CHIEF ENGINEER (DEVELOPMENT)

CHIEF ENGINEER

STANDARD DRAWING

EROSION & SEDIMENT CONTROL RETENTION BASIN

English

STANDARD DRAWING NO. P-4-A

SHEET 1 OF 1

PROFESSIONAL ENGINEER LICENSED Karissa Hardy 14025 10-27-2010 STATE OF IDAHO KARISSA HARDY

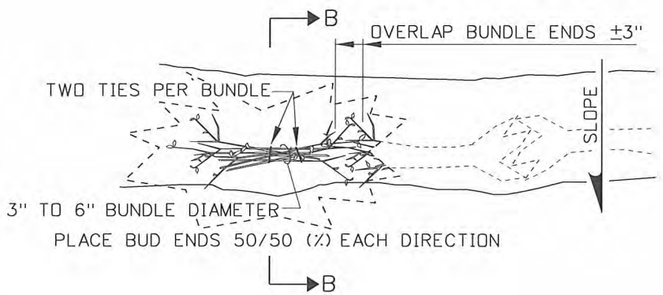

PLAN
BUNDLE INSTALLATION

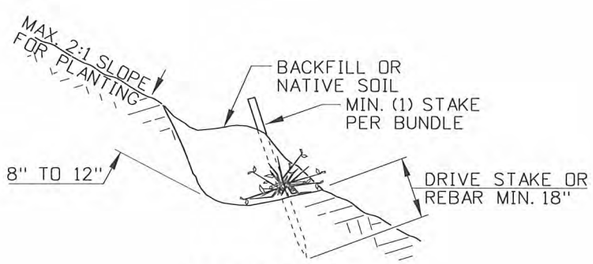

SECTION B-B

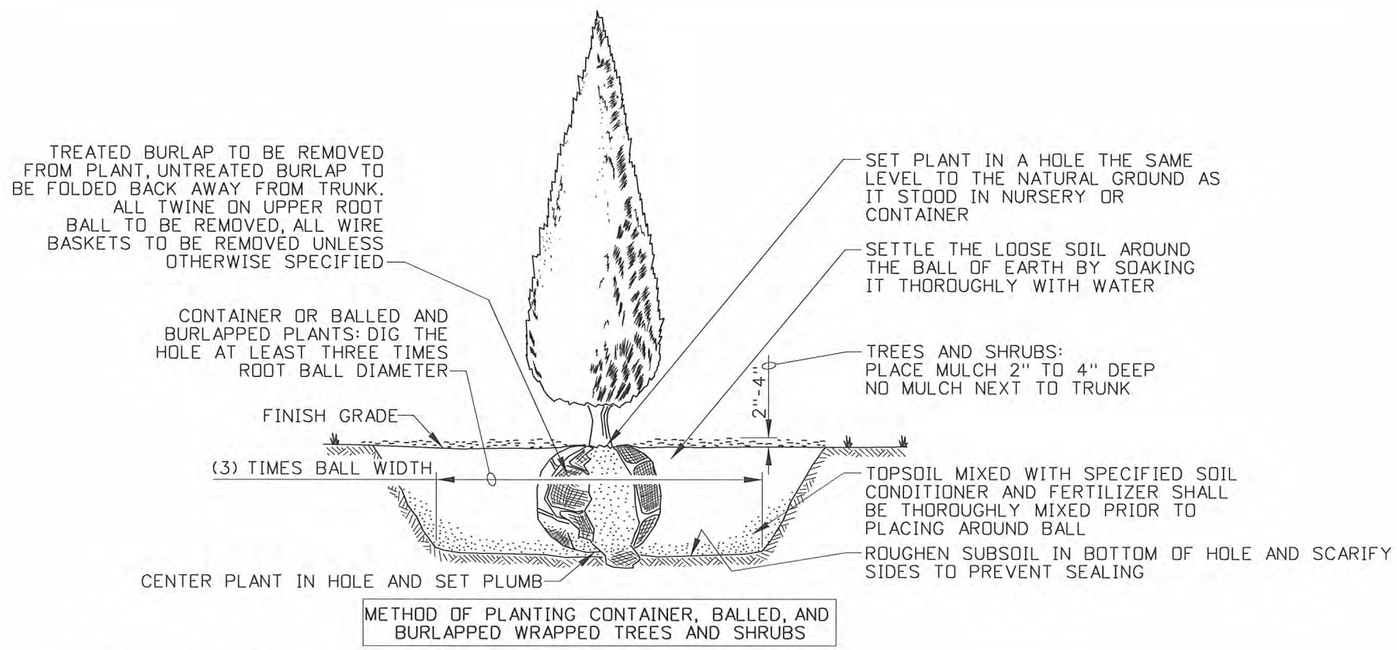

METHOD OF PLANTING CONTAINER, BALLED, AND BURLAPPED WRAPPED TREES AND SHRUBS

BALLED TREES & SHRUBS

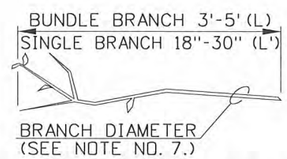

BRANCH LENGTH DETAIL

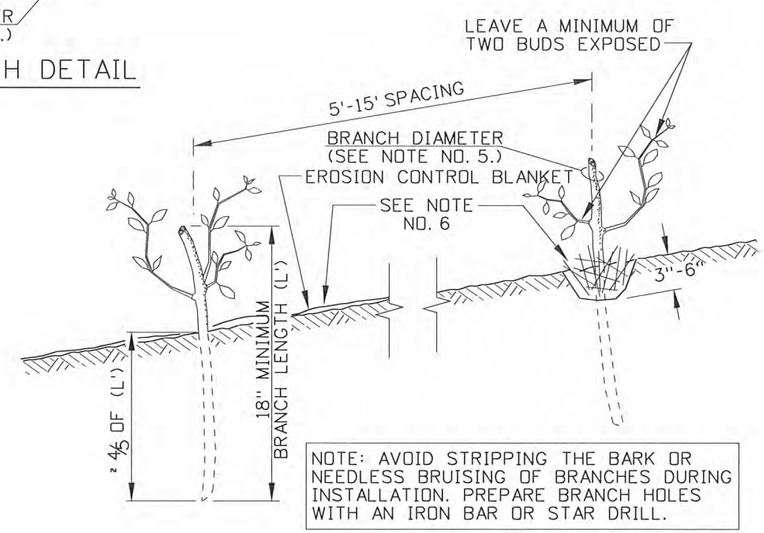

NOTE: AVOID STRIPPING THE BARK OR NEEDLESS BRUISING OF BRANCHES DURING INSTALLATION. PREPARE BRANCH HOLES WITH AN IRON BAR OR STAR DRILL.

SINGLE BRANCH INSTALLATION

NOTES

1. THE WOOD STAKES SHALL BE CONSTRUCTION GRADE, ROUGH OR DRESSED.
2. THE RECOMMENDED BRANCH DIAMETER IS DETERMINED BY THE SPECIES AND PLANTING CONDITIONS. THIS INFORMATION CAN BE OBTAINED FROM ROADSIDE MANAGEMENT OF THE MAINTENANCE SECTION.
3. NOT TO SCALE

REVISIONS

NO.	DATE	BY	NO.	DATE	BY	NO.	DATE	BY
1	9-98	MSM						
2	10-2010	KEH						

SCALES SHOWN ARE FOR 11" X 17" PRINTS ONLY

CADD FILE NAME: p4b_1010.std

DRAWING DATE: DECEMBER, 1995

IDAHO TRANSPORTATION DEPARTMENT

BOISE IDAHO

ASSISTANT CHIEF ENGINEER (DEVELOPMENT)

CHIEF ENGINEER

STANDARD DRAWING

METHODS OF PLANTING TREES, SHRUBS AND WATTLING (FACINES)

English

STANDARD DRAWING NO. P-4-B

SHEET 1 OF 1

PROFESSIONAL ENGINEER LICENSED 14025 10-27-2010 STATE OF IDAHO KARISSA HARDY

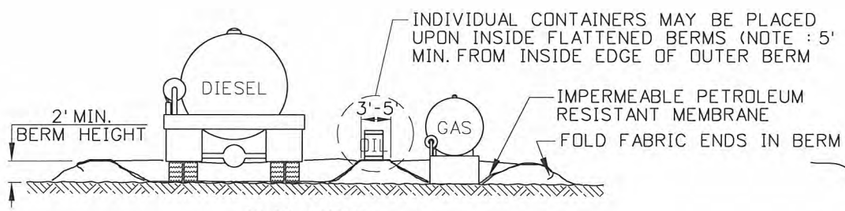

ELEVATION

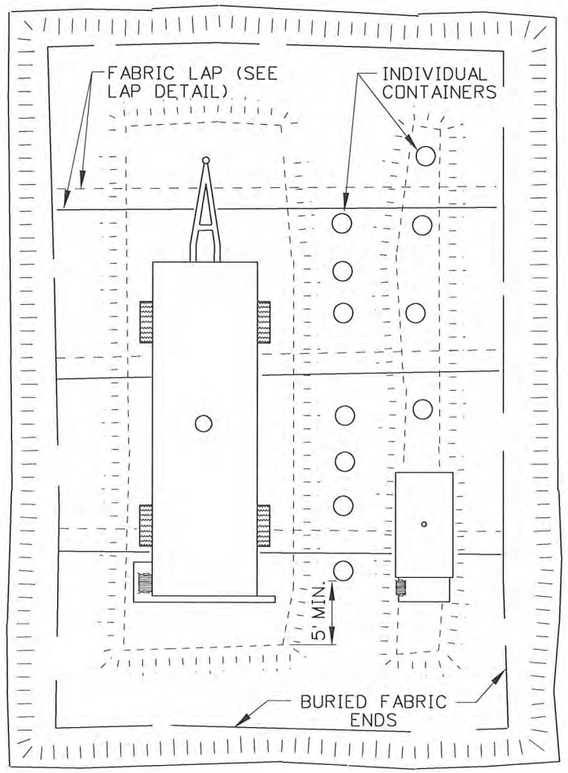

PLAN

PETROLEUM STORAGE AREA - TYPE 1

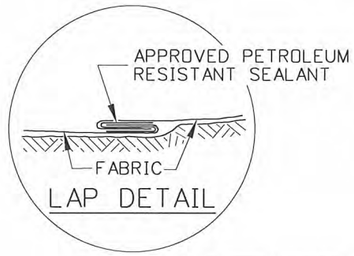

LAP DETAIL

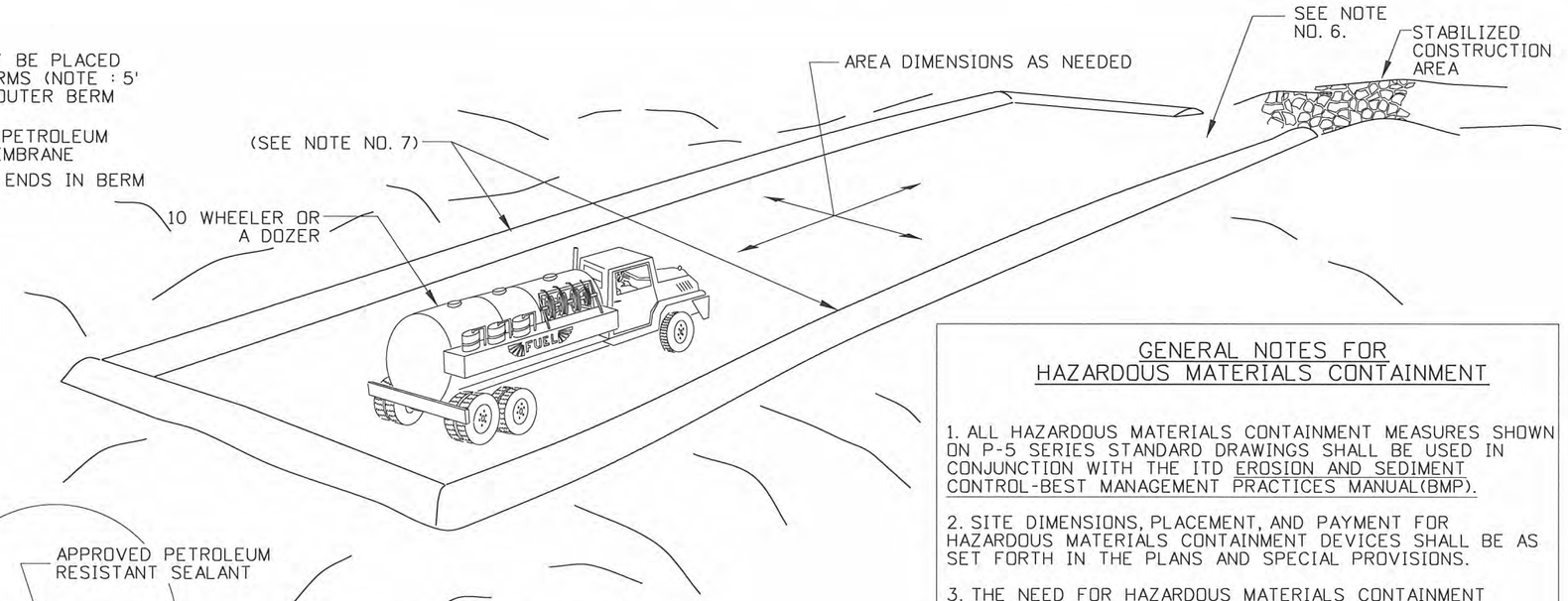

EQUIPMENT STAGING AREA

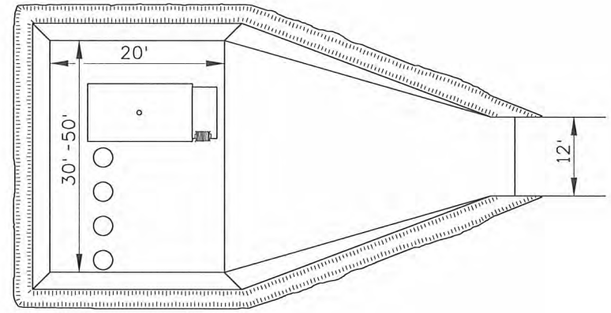

PLAN

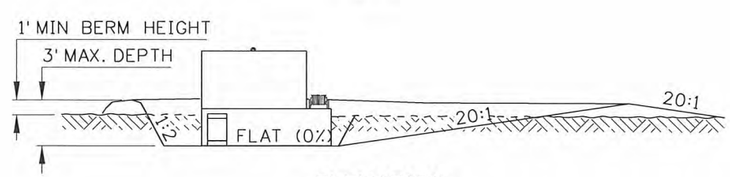

ELEVATION

PETROLEUM STORAGE AREA - TYPE 2

GENERAL NOTES FOR HAZARDOUS MATERIALS CONTAINMENT

1. ALL HAZARDOUS MATERIALS CONTAINMENT MEASURES SHOWN ON P-5 SERIES STANDARD DRAWINGS SHALL BE USED IN CONJUNCTION WITH THE ITD EROSION AND SEDIMENT CONTROL-BEST MANAGEMENT PRACTICES MANUAL(BMP).

2. SITE DIMENSIONS, PLACEMENT, AND PAYMENT FOR HAZARDOUS MATERIALS CONTAINMENT DEVICES SHALL BE AS SET FORTH IN THE PLANS AND SPECIAL PROVISIONS.

3. THE NEED FOR HAZARDOUS MATERIALS CONTAINMENT MEASURES SHALL BE DETERMINED BY SITE DESIGN. MODIFICATIONS TO THOSE INSTALLATIONS SHALL BE APPROVED BY THE ENGINEER.

4. HAZARDOUS MATERIALS CONTAINMENT MEASURES ARE INTENDED TO FUNCTION AS LONG AS THE NEED EXISTS.

NOTES

1. SEE THE GENERAL NOTES FOR HAZARDOUS MATERIALS CONTAINMENT.

2. THE PETROLEUM STORAGE AND EQUIPMENT STAGING AREAS ARE INTENDED TO LAST FOR THE DURATION OF THE PROJECT.

3. THE TYPE 1 PETROLEUM STORAGE AREA IS REQUIRED. AN IMPERMEABLE PETROLEUM RESISTANT MEMBRANE SHALL BE INCLUDED. SIX INCHES OF IMPERMIABLE CLAY MAY BE SUBSTITUTED. IMPERMIABLE LINER MAY USED ON APPROVAL BY ENGINEER.

4. THE BERM CONSTRUCTION ON PETROLEUM STORAGE AREA - TYPE 1 REQUIRES THAT THE TOTAL VOLUME BE 150% OF THE TOTAL CAPACITY OF THE STORAGE CONTAINERS OR ENCLOSED.

5. ANY SOIL CONTAMINATION RESULTING FROM PETROLEUM SPILLAGE IN ANY OF THESE DEVICES SHALL REQUIRE NOTIFICATION TO THE ENGINEER AND THE HAZARDOUS MATERIALS COORDINATOR. FINAL REMOVAL AND DISPOSAL OF THESE DEVICES SHALL ALSO BE DIRECTED BY THE ENGINEER AND HAZARDOUS MATERIALS COORDINATOR.

6. ALL RUNOFF AT THE EQUIPMENT STAGING AREA ENTRANCE(S) SHALL NOT BE ALLOWED TO LEAVE THE STAGING AREA.

7. NOT TO SCALE.

REVISIONS

NO.	DATE	BY	NO.	DATE	BY	NO.	DATE	BY
1	9-98	MSM						
2	10-2010	KEH						

SCALES SHOWN ARE FOR 11" X 17" PRINTS ONLY

CADD FILE NAME: p5a_1010.std

DRAWING DATE: DECEMBER, 1995

IDAHO TRANSPORTATION DEPARTMENT

BOISE IDAHO

ASSISTANT CHIEF ENGINEER (DEVELOPMENT)

CHIEF ENGINEER

STANDARD DRAWING

HAZARDOUS MATERIALS CONTAINMENT PETROLEUM STORAGE

REFER TO STD. DWG. P-1-G

English

STANDARD DRAWING NO.

P-5-A

SHEET 1 OF 1

PROFESSIONAL ENGINEER LICENSED 14025 10-27-2010 STATE OF IDAHO KARISSA HARDY

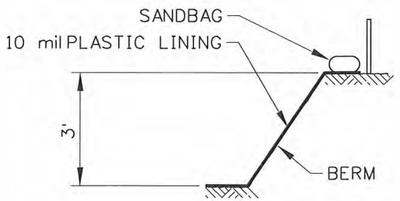

SECTION A-A
NOT TO SCALE

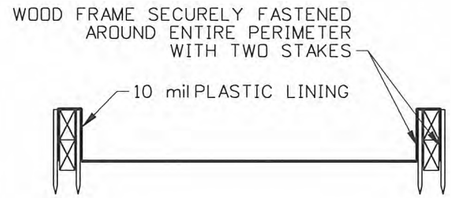

SECTION B-B
NOT TO SCALE

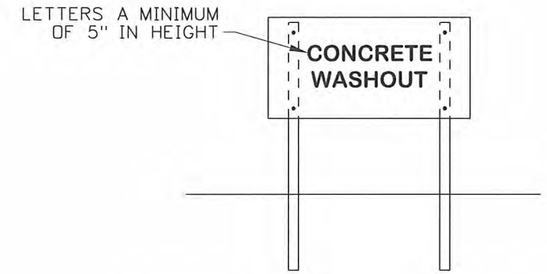

CONCRETE WASHOUT SIGN DETAIL
NOT TO SCALE

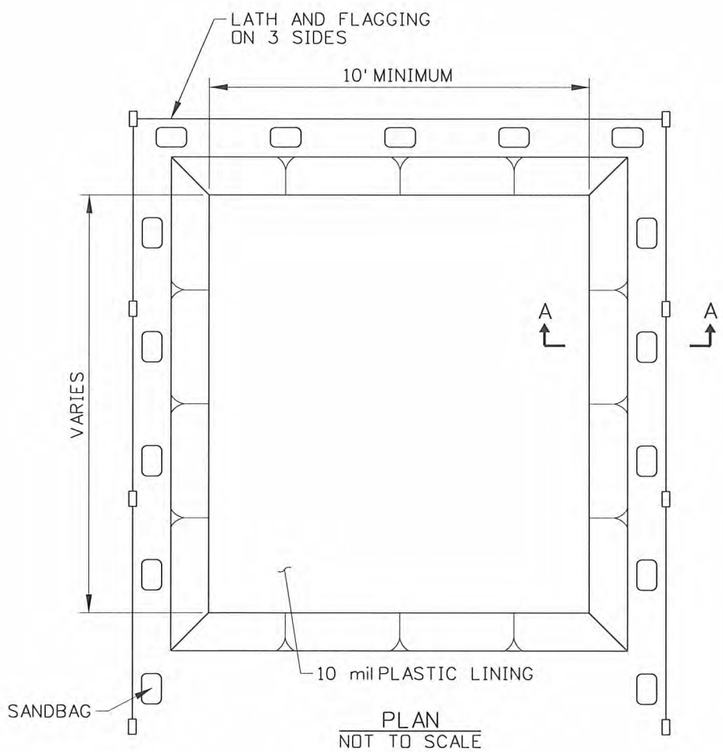

PLAN
NOT TO SCALE

TYPE "BERM"

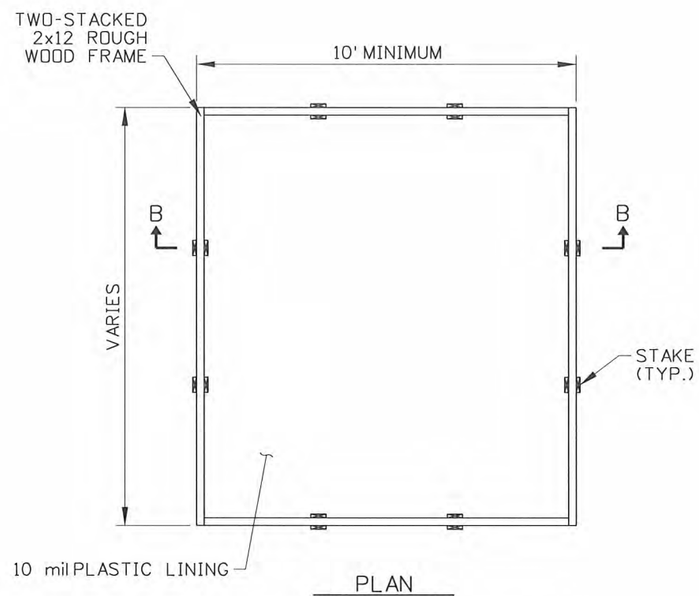

PLAN
NOT TO SCALE

TYPE "WOOD PLANKS"

NOTES

1. ACTUAL LAYOUT DETERMINED IN THE FIELD
2. THE CONCRETE WASHOUT SIGN SHALL BE INSTALLED WITHIN 30 FEET OF THE TEMPORARY CONCRETE WASHOUT FACILITY.
3. USE OF PREFABRICATED TEMPORARY WASHOUT MAY ONLY BE USED ON APPROVAL BY THE ENGINEER.

REVISIONS								
NO.	DATE	BY	NO.	DATE	BY	NO.	DATE	BY

SCALES SHOWN ARE FOR 11" X 17" PRINTS ONLY

CADD FILE NAME: p5b_1010.std

DRAWING DATE: OCTOBER, 2010

IDAHO TRANSPORTATION DEPARTMENT

BOISE IDAHO

ASSISTANT CHIEF ENGINEER (DEVELOPMENT)

CHIEF ENGINEER

STANDARD DRAWING

TEMPORARY CONCRETE WASHOUT

English

STANDARD DRAWING NO.

P-5-B

SHEET 1 OF 1

PROFESSIONAL ENGINEER LICENSED Karissa Hardy 14025 10-27-2010 STATE OF IDAHO KARISSA HARDY

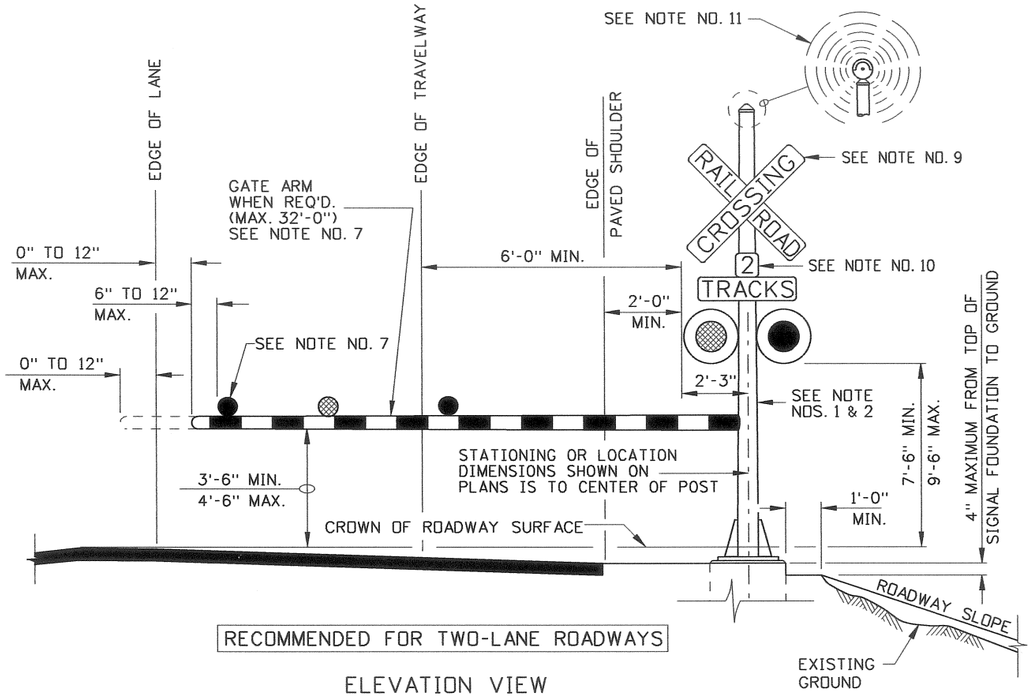

RECOMMENDED FOR TWO-LANE ROADWAYS

ELEVATION VIEW

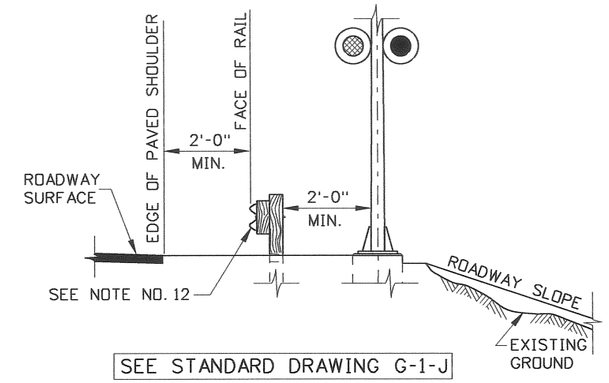

SEE STANDARD DRAWING G-1-J

TYPICAL SECTION

(WITH GUARDRAIL)

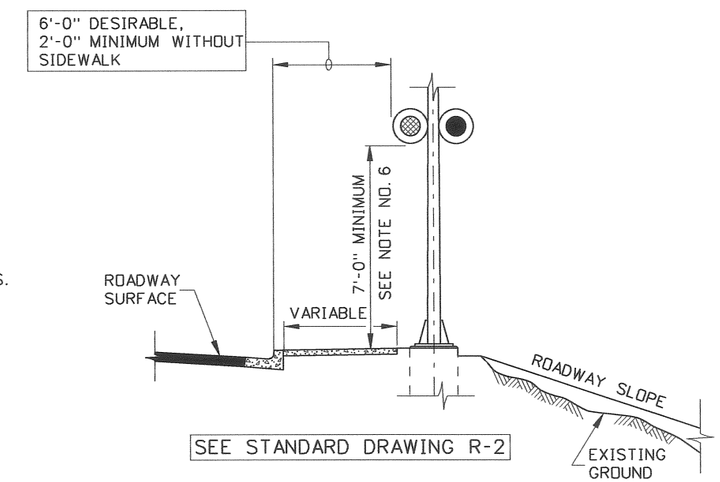

SEE STANDARD DRAWING R-2

TYPICAL CURB & GUTTER SECTION

(WITH OR WITHOUT SIDEWALK)

NOTES

1. LAYOUT OF HIGHWAY-RAILROAD GRADE CROSSING SIGNAL SHALL BE CONSISTENT WITH THE STANDARDS OF THE RAILROAD COMPANY AND PART 8 OF THE MANUAL ON UNIFORM TRAFFIC CONTROL DEVICES (AS ADOPTED BY THE STATE). THE RAILROAD COMPANY WILL DESIGN THE STRUCTURE AND OTHER COMPONENTS OF THE RAILROAD CROSSING SIGNALS.
2. POST LOCATION SHALL BE AS SHOWN ON THE PLANS. ALL PARTS OF THE RAILROAD CROSSING SIGNAL, INCLUDING GATE ARM IN THE UPRIGHT POSITION, SHALL BE A MINIMUM OF 10 FEET, MEASURED PERPENDICULAR FROM THE NEAREST RAIL OF THE RAILROAD TRACKS.
3. TOP OF THE SIGNAL FOUNDATION SHALL BE FLUSH WITH TOP OF CURB OR TOP OF SIDEWALK. THE GROUND SURFACE SHALL BE GRADED TO WITHIN 4 INCHES BELOW THE TOP OF THE FOUNDATION TO A MINIMUM DISTANCE OF 1 FOOT BEYOND THE SIGNAL FOUNDATION.
4. A FLASHING-LIGHT SIGNAL CONSISTS OF TWO LIGHTS HAVING 12-INCH LENS WITH RED LIGHT EMITTING DIODES (LED) MOUNTED IN A HORIZONTAL LINE THAT FLASH ALTERNATELY WHEN ACTIVATED. THE FLASHING RATE IS 35 TO 65 FLASHES PER MINUTE.
5. NUMBER OF FLASHING-LIGHT SIGNALS SHALL BE AS SHOWN ON THE PLANS. FLASHING-LIGHT SIGNALS SHALL BE MOUNTED BACK TO BACK ON THE POST. OTHER FLASHING-LIGHT SIGNALS, IF NECESSARY, SHALL BE PLACED FOR THE BEST VISIBILITY TO OTHER APPROACHING ROADWAY OR PEDESTRIAN TRAFFIC.
6. WHERE THERE IS SIDEWALK, THE FLASHING-LIGHT SIGNALS ON THE POST SHALL BE A MINIMUM OF 7 FEET ABOVE THE TOP OF SIDEWALK.
7. WHEN GATE ARMS ARE USED, LENGTHS SHALL BE AS SHOWN ON THE PLANS. THE TIP OF A GATE ARM IN THE DOWN POSITION SHALL BE WITHIN 1 FOOT EITHER SIDE OF THE EDGE OF LANE AND A MINIMUM OF 8 FEET MEASURED PERPENDICULAR FROM THE NEAREST RAIL OF THE RAILROAD TRACK. GATE ARMS LONGER THAN 28 FEET REQUIRE APPROVAL FROM THE RAILROAD COMPANY. THE GATE ARM SHALL BE FULLY RETRO REFLECTORIZED ON BOTH SIDES WITH VERTICAL STRIPES ALTERNATELY COLORED RED AND WHITE AT 16-INCH INTERVALS MEASURED HORIZONTALLY AND HAVE AT LEAST THREE RED LIGHT EMITTING DIODES (LED) ON THE TOP OF THE GATE ARM. THE GATE ARM LIGHTS, WHEN ACTIVATED, SHALL FLASH ALTERNATELY IN UNISON WITH THE FLASHING-LIGHT SIGNALS EXCEPT FOR THE LIGHT NEAREST THE TIP OF THE GATE ARM WHICH SHALL BE ILLUMINATED CONTINUOUSLY.
8. AAR/DOT IDENTIFICATION TAG SHALL BE ATTACHED TO POST IMMEDIATELY BELOW THE FLASHING-LIGHT SIGNAL OR ON THE OUTSIDE OF THE SIGNAL HOUSE.
9. CROSS BUCK (R15-1) SIGNS SHALL BE MOUNTED BACK TO BACK ON THE POST.
10. SUPPLEMENTAL NUMBER OF TRACKS (R15-2) SIGNS SHALL BE MOUNTED BACK TO BACK ON THE POST AT A POSITION BETWEEN THE CROSS BUCK SIGN AND THE FLASHING-LIGHT SIGNAL WHEN THERE ARE TWO OR MORE RAILROAD TRACKS. THIS SIGN IS OPTIONAL WHEN GATE ARMS ARE USED.
11. BELLS OR OTHER AUDIBLE WARNING DEVICES MAY BE INCLUDED WHICH WILL OPERATE IN CONJUNCTION WITH THE FLASHING-LIGHT SIGNALS.
12. THE NEED FOR GUARDRAIL SHALL NOT BE BASED SOLELY UPON THE ROADSIDE OBSTACLE OF A RAILROAD CROSSING SIGNAL UNLESS REQUESTED BY THE RAILROAD COMPANY.
13. NOT TO SCALE.

REVISIONS

NO.	DATE	BY	NO.	DATE	BY	NO.	DATE	BY
1	07-10	EBG						

SCALES SHOWN ARE FOR 11" X 17" PRINTS ONLY

CADD FILE NAME: rla_0710.std

DRAWING DATE: MARCH, 2004

IDAHO TRANSPORTATION DEPARTMENT

BOISE IDAHO

ASSISTANT CHIEF ENGINEER (DEVELOPMENT)

CHIEF ENGINEER

STANDARD DRAWING

HIGHWAY - RAILROAD GRADE CROSSING SIGNAL TYPE 1

English

STANDARD DRAWING NO.

R-1-A

SHEET 1 OF 1

PROFESSIONAL ENGINEER REGISTERED 6260 7/12/10 STATE OF IDAHO CARL D. MAIN

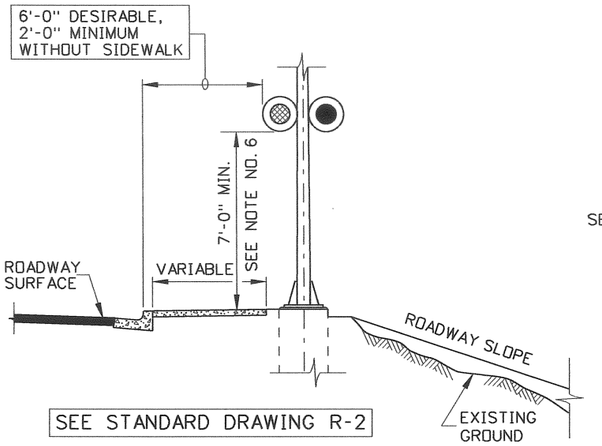

SEE STANDARD DRAWING R-2

TYPICAL CURB & GUTTER SECTION

(WITH OR WITHOUT SIDEWALK)

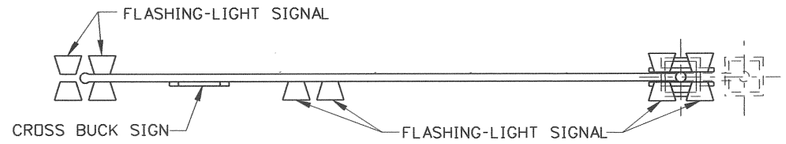

PLAN VIEW

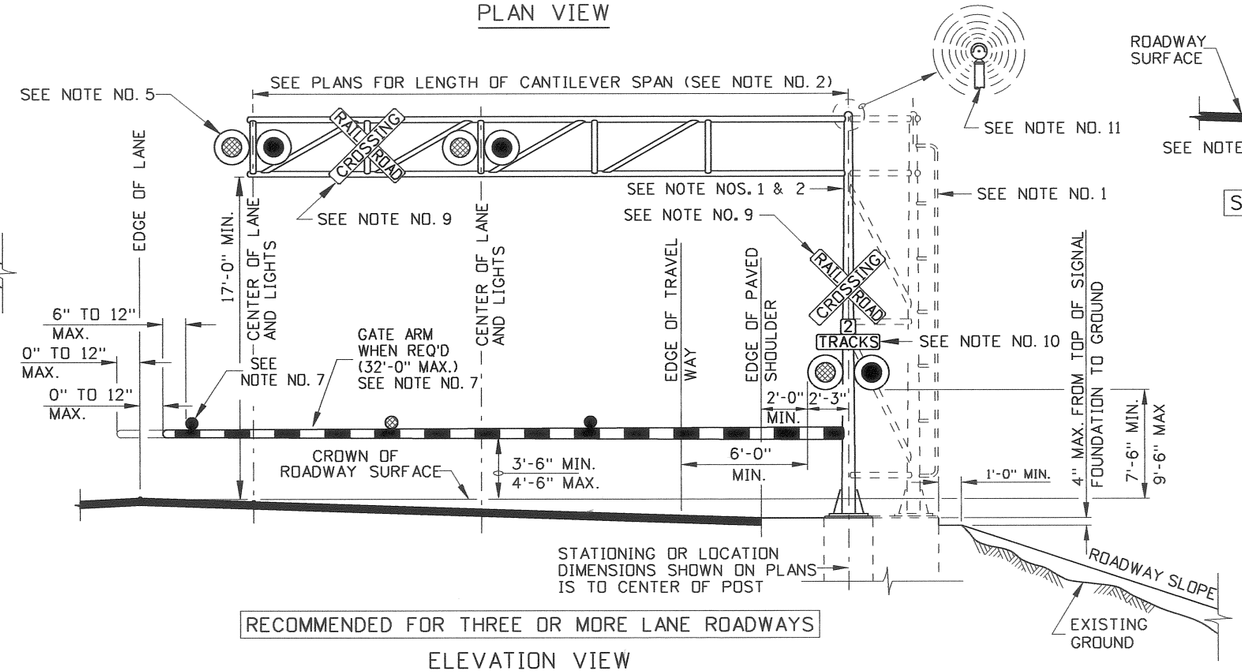

RECOMMENDED FOR THREE OR MORE LANE ROADWAYS

ELEVATION VIEW

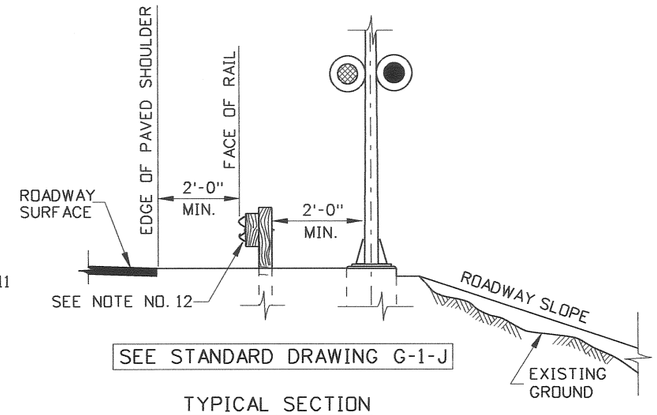

SEE STANDARD DRAWING G-1-J

TYPICAL SECTION

(WITH GUARDRAIL)

NOTES

1. LAYOUT OF HIGHWAY-RAILROAD GRADE CROSSING SIGNAL SHALL BE CONSISTENT WITH THE STANDARDS OF THE RAILROAD COMPANY AND PART 8 OF THE MANUAL ON UNIFORM TRAFFIC CONTROL DEVICES (AS ADOPTED BY THE STATE). THE RAILROAD COMPANY WILL DESIGN THE STRUCTURE AND OTHER COMPONENTS OF THE RAILROAD CROSSING SIGNAL. THE RAILROAD COMPANY WILL DETERMINE THE NEED FOR AND THEN DESIGN ANY ADDITIONAL SUPPORT STRUCTURE.
2. POST LOCATION AND LENGTH OF CANTILEVER SPAN SHALL BE AS SHOWN ON PLANS. CANTILEVER SPAN IS PERPENDICULAR TO ROADWAY UNLESS OTHERWISE NOTED ON THE PLANS. ALL PARTS OF THE RAILROAD CROSSING SIGNAL, INCLUDING GATE ARM IN THE UPRIGHT POSITION, SHALL BE A MINIMUM OF 10 FEET, MEASURED PERPENDICULAR FROM THE NEAREST RAIL OF THE RAILROAD TRACKS
3. TOP OF THE SIGNAL FOUNDATION SHALL BE FLUSH WITH TOP OF CURB OR TOP OF SIDEWALK. THE GROUND SURFACE SHALL BE GRADED TO WITHIN 4 INCHES BELOW THE TOP OF THE SIGNAL FOUNDATION TO A MINIMUM DISTANCE OF 1 FOOT BEYOND THE SIGNAL FOUNDATION.
4. A FLASHING-LIGHT SIGNAL CONSISTS OF TWO LIGHTS HAVING 12-INCH LENS WITH RED LIGHT EMITTING DIODES (LED) MOUNTED IN A HORIZONTAL LINE THAT FLASH ALTERNATELY WHEN ACTIVATED. THE FLASHING RATE IS 35 TO 65 FLASHES PER MINUTE.
5. NUMBER OF FLASHING-LIGHT SIGNALS SHALL BE AS SHOWN ON THE PLANS. FLASHING-LIGHT SIGNALS SHALL BE MOUNTED BACK TO BACK ON THE POST AND BACK TO BACK AT THE END OF THE CANTILEVER SPAN. FLASHING-LIGHT SIGNALS SHALL BE MOUNTED ABOVE THE CENTER OF EACH LANE ON THE CANTILEVER SPAN. OTHER FLASHING-LIGHT SIGNALS, IF NECESSARY, SHALL BE PLACED FOR THE BEST VISIBILITY TO OTHER APPROACHING ROADWAY OR PEDESTRIAN TRAFFIC.
6. WHERE THERE IS SIDEWALK, THE FLASHING-LIGHT SIGNALS ON THE POST SHALL BE A MINIMUM OF 7 FEET ABOVE THE TOP OF SIDEWALK.
7. WHEN GATES ARMS ARE USED, LENGTHS SHALL BE AS SHOWN ON THE PLANS. THE TIP OF A GATE ARM IN THE DOWN POSITION SHALL BE WITHIN 1 FOOT EITHER SIDE OF THE EDGE OF LANE AND A MINIMUM OF 8 FEET MEASURED PERPENDICULAR FROM THE NEAREST RAIL OF THE RAILROAD TRACK. GATE ARMS LONGER THAN 28 FEET REQUIRE APPROVAL FROM THE RAILROAD COMPANY. THE GATE ARM SHALL BE FULLY RETRO REFLECTORIZED ON BOTH SIDES WITH VERTICAL STRIPES ALTERNATELY COLORED RED AND WHITE AT 16-INCH INTERVALS MEASURED HORIZONTAL AND HAVE AT LEAST THREE RED LIGHT EMITTING DIODES (LED) ON TOP OF THE GATE ARM. THE GATE ARM LIGHTS, WHEN ACTIVATED, SHALL FLASH ALTERNATELY IN UNISON WITH THE FLASHING-LIGHT SIGNALS EXCEPT FOR THE LIGHT NEAREST THE TIP OF THE GATE ARM WHICH SHALL BE ILLUMINATED CONTINUOUSLY.
8. AAR/DOT IDENTIFICATION TAG SHALL BE ATTACHED TO POST IMMEDIATELY BELOW THE FLASHING-LIGHT SIGNAL OR ON THE OUTSIDE OF THE SIGNAL HOUSE.
9. CROSS BUCK (R15-1) SIGNS SHALL BE MOUNTED BACK TO BACK ON THE POST. A CROSS BUCK SIGN SHALL BE MOUNTED BETWEEN THE FLASHING-LIGHT SIGNALS ON THE CANTILEVER SPAN.
10. SUPPLEMENTAL NUMBER OF TRACKS (R15-2) SIGNS SHALL BE MOUNTED BACK TO BACK ON THE OUTSIDE OF THE POST AT A POSITION BETWEEN THE CROSS BUCK SIGNS AND THE FLASHING-LIGHT SIGNAL WHEN THERE ARE TWO OR MORE RAILROAD TRACKS. THIS SIGN IS OPTIONAL WHEN GATE ARMS ARE USED.
11. BELLS OR OTHER AUDIBLE WARNING DEVICES MAY BE INCLUDED WHICH WILL OPERATE IN CONJUNCTION WITH THE FLASHING-LIGHT SIGNALS.
12. THE NEED FOR GUARDRAIL SHALL NOT BE BASED SOLELY UPON THE ROADSIDE OBSTACLE OF A RAILROAD CROSSING SIGNAL UNLESS REQUESTED BY THE RAILROAD COMPANY.
13. NOT TO SCALE.

REVISIONS								
NO.	DATE	BY	NO.	DATE	BY	NO.	DATE	BY
1	07-10	EBG						

SCALES SHOWN ARE FOR 11" X 17" PRINTS ONLY

CADD FILE NAME: r1b_0710.std

DRAWING DATE: MARCH, 2004

IDAHO TRANSPORTATION DEPARTMENT

BOISE IDAHO

ASSISTANT CHIEF ENGINEER (DEVELOPMENT)

CHIEF ENGINEER

STANDARD DRAWING

HIGHWAY - RAILROAD GRADE CROSSING SIGNAL TYPE 2

English

STANDARD DRAWING NO.

R-1-B

SHEET 1 OF 1

PROFESSIONAL ENGINEER REGISTERED 6260 7/12/10 STATE OF IDAHO CARL D. MAIN

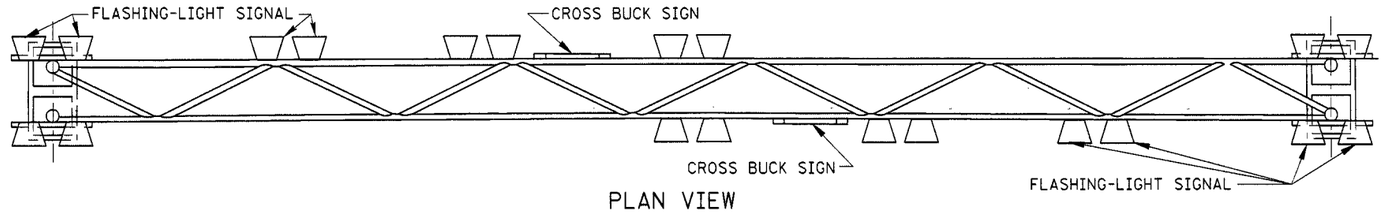

PLAN VIEW

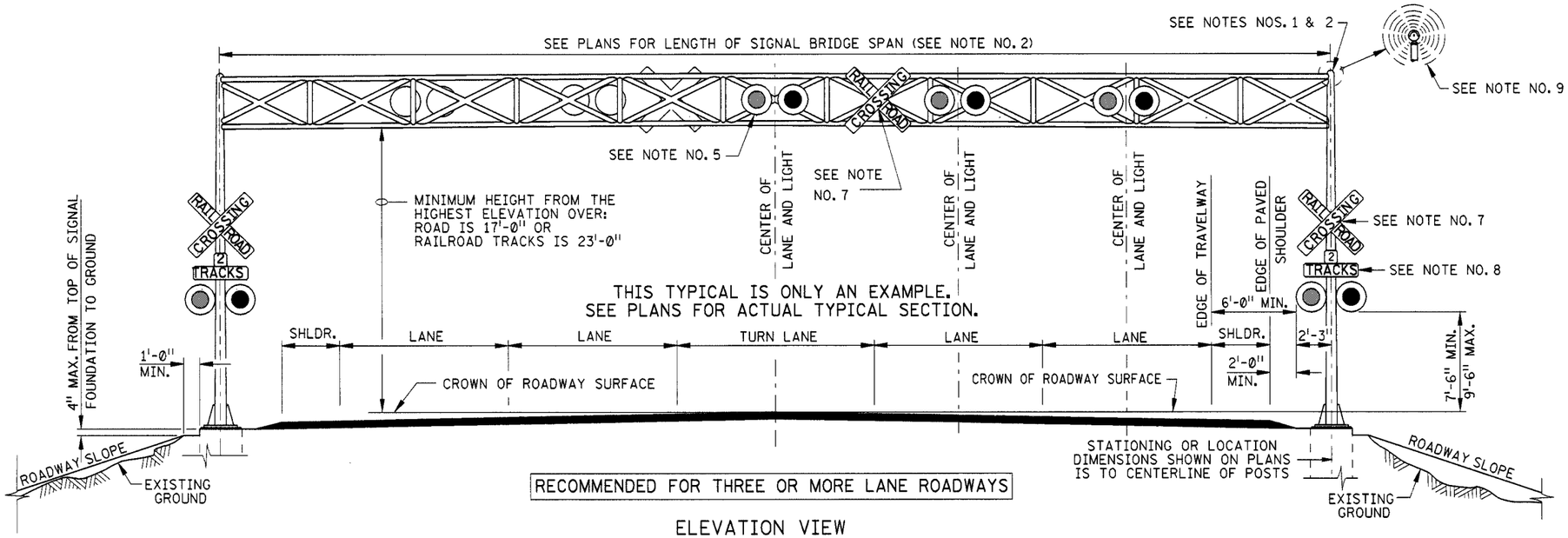

RECOMMENDED FOR THREE OR MORE LANE ROADWAYS

ELEVATION VIEW

NOTES

1. LAYOUT OF HIGHWAY-RAILROAD GRADE CROSSING SIGNAL SHALL BE CONSISTENT WITH THE STANDARDS OF THE RAILROAD COMPANY AND PART 8 OF THE MANUAL ON UNIFORM TRAFFIC CONTROL DEVICES (AS ADOPTED BY THE STATE). ADEQUATE VERTICAL CLEARANCE SHALL BE PROVIDED BY RAILROAD CROSSING SIGNAL OVER THE ROAD AND/OR RAILROAD TRACK(S). THE RAILROAD COMPANY WILL DESIGN THE STRUCTURE AND OTHER COMPONENTS OF THE RAILROAD CROSSING SIGNAL.
2. POST LOCATION AND LENGTH OF SIGNAL BRIDGE SPAN SHALL BE AS SHOWN ON THE PLANS. SIGNAL BRIDGE SPAN IS PERPENDICULAR TO ROADWAY UNLESS OTHERWISE NOTED, ON THE PLANS. ALL PARTS OF THE RAILROAD CROSSING SIGNAL SHALL BE A MINIMUM OF 10 FEET, MEASURED PERPENDICULAR FROM THE NEAREST RAIL OF THE RAILROAD TRACKS.
3. TOP OF THE SIGNAL FOUNDATION SHALL BE FLUSH WITH TOP OF CURB OR TOP OF SIDEWALK. THE GROUND SURFACE SHALL BE GRADED TO WITHIN 4 INCHES BELOW THE TOP OF THE FOUNDATION TO A MINIMUM DISTANCE OF 1 FOOT BEYOND THE SIGNAL FOUNDATION.
4. A FLASHING-LIGHT SIGNAL CONSISTS OF TWO LIGHTS HAVING 12-INCH LENS WITH RED LIGHT EMITTING DIODES (LED) MOUNTED IN A HORIZONTAL LINE THAT FLASH ALTERNATELY WHEN ACTIVATED. THE FLASHING RATE IS 35 TO 65 FLASHES PER MINUTE.
5. NUMBER OF FLASHING-LIGHT SIGNALS SHALL BE AS SHOWN ON THE PLANS. FLASHING-LIGHT SIGNALS SHALL BE MOUNTED BACK TO BACK ON THE OUTSIDE OF THE POST. FLASHING-LIGHT SIGNALS SHALL BE MOUNTED ABOVE THE CENTER OF EACH LANE ON THE SIGNAL BRIDGE SPAN WITH THE FURTHERMOST INSIDE LANE BEING MOUNTED BACK TO BACK ON THE OUTSIDE OF THE SIGNAL BRIDGE SPAN. OTHER FLASHING-LIGHT SIGNALS, IF NECESSARY, SHALL BE PLACED FOR THE BEST VISIBILITY TO OTHER APPROACHING ROADWAY OR PEDESTRIAN TRAFFIC.
6. AAR/DOT IDENTIFICATION TAG SHALL BE ATTACHED TO POST IMMEDIATELY BELOW THE FLASHING-LIGHT SIGNAL OR ON THE OUTSIDE OF THE SIGNAL HOUSE.
7. CROSS BUCK (R15-1) SIGNS SHALL BE MOUNTED BACK TO BACK ON THE OUTSIDE OF THE POST. A MINIMUM OF ONE CROSS BUCK SIGN SHALL BE MOUNTED BETWEEN THE FLASHING-LIGHT SIGNALS ON THE SIGNAL BRIDGE SPAN FOR EACH DIRECTION OF VEHICULAR TRAVEL.
8. SUPPLEMENTAL NUMBER OF TRACKS (R15-2) SIGNS SHALL BE MOUNTED BACK TO BACK ON THE OUTSIDE OF THE POST AT A POSITION BETWEEN THE CROSS BUCK SIGNS AND THE FLASHING-LIGHT SIGNAL WHEN THERE ARE TWO OR MORE RAILROAD TRACKS.
9. BELLS OR OTHER AUDIBLE WARNING DEVICES MAY BE INCLUDED WHICH WILL OPERATE IN CONJUNCTION WITH THE FLASHING-LIGHT SIGNALS.
10. NOT TO SCALE.

REVISIONS								
NO.	DATE	BY	NO.	DATE	BY	NO.	DATE	BY

SCALES SHOWN ARE FOR 11" X 17" PRINTS ONLY

CADD FILE NAME: r1c_0304.std

DRAWING ORIG. DATE: MARCH, 2004

IDAHO TRANSPORTATION DEPARTMENT

BOISE IDAHO

Steven C. Hutchinson
ASSISTANT CHIEF ENGINEER (DEVELOPMENT)

CHIEF ENGINEER

STANDARD DRAWING

HIGHWAY - RAILROAD GRADE CROSSING SIGNAL TYPE 3

REQUIRES SHEET 2 OF 2

English

STANDARD DRAWING NO.

R-1-C

SHEET 1 OF 2

PROFESSIONAL ENGINEER REGISTERED 9415 3/29/04 STATE OF IDAHO JONATHAN LENHART

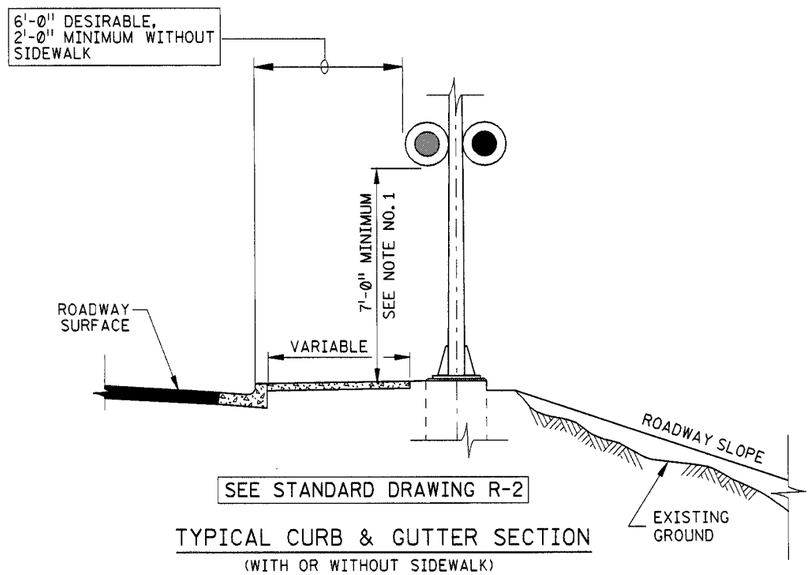

SEE STANDARD DRAWING R-2

TYPICAL CURB & GUTTER SECTION

(WITH OR WITHOUT SIDEWALK)

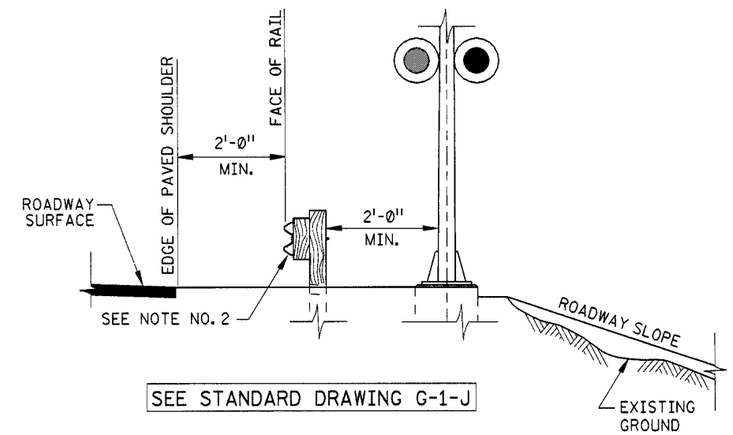

SEE STANDARD DRAWING G-1-J

TYPICAL SECTION

(WITH GUARDRAIL)

NOTES

1. WHERE THERE IS SIDEWALK, THE FLASHING-LIGHT SIGNALS ON THE POST SHALL BE A MINIMUM OF 7 FEET ABOVE THE TOP OF SIDEWALK.
2. THE NEED FOR GUARDRAIL SHALL NOT BE BASED SOLELY UPON THE ROADSIDE OBSTACLE OF A RAILROAD CROSSING SIGNAL UNLESS REQUESTED BY THE RAILROAD COMPANY.
3. NOT TO SCALE.

REVISIONS								
NO.	DATE	BY	NO.	DATE	BY	NO.	DATE	BY

SCALES SHOWN ARE FOR 11" X 17" PRINTS ONLY

CADD FILE NAME: r1c_0304.std

DRAWING ORIG. DATE: MARCH, 2004

IDAHO TRANSPORTATION DEPARTMENT

BOISE IDAHO

ASSISTANT CHIEF ENGINEER (DEVELOPMENT)

CHIEF ENGINEER

STANDARD DRAWING

HIGHWAY - RAILROAD GRADE CROSSING SIGNAL TYPE 3

REQUIRES SHEET 1 OF 2

English

STANDARD DRAWING NO.

R-1-C

SHEET 2 OF 2

PROFESSIONAL ENGINEER REGISTERED 9415 3/29/04 STATE OF IDAHO JONATHAN LENHART

NOTES

1. LAYOUT OF THE HIGHWAY-RAILROAD GRADE CROSSING AREA REQUIRES THE TOP OF ROADWAY SURFACE TO MATCH THE TOP OF TRACK OR TOP OF RAILROAD CROSSING SURFACE MATERIAL IN A MANNER THAT WATER DRAINS AWAY FROM THE RAILROAD TRACKS. THE RAILROAD MAY CONCUR TO ADJUST THE ELEVATION OF THE RAILROAD TRACKS. IT IS EASIER TO RAISE RAILROAD TRACKS COMPARED TO LOWERING RAILROAD TRACKS.
2. LENGTH AND TYPE OF RAILROAD CROSSING SURFACE MATERIAL, ALSO CALLED RAILROAD PLANKING, SHALL BE AS SHOWN ON THE PLANS.
3. CURB, GUTTER AND SIDEWALK (IF USED) SHALL TRANSITION ON BOTH SIDES OF TRACKS FROM A NORMAL HEIGHT TO A "FLAT" SECTION AT THE SAME ELEVATION AS THE TOP OF THE TRACKS AND BUTT UP FLUSH TO RAILROAD PLANKING.
4. NOT TO SCALE.

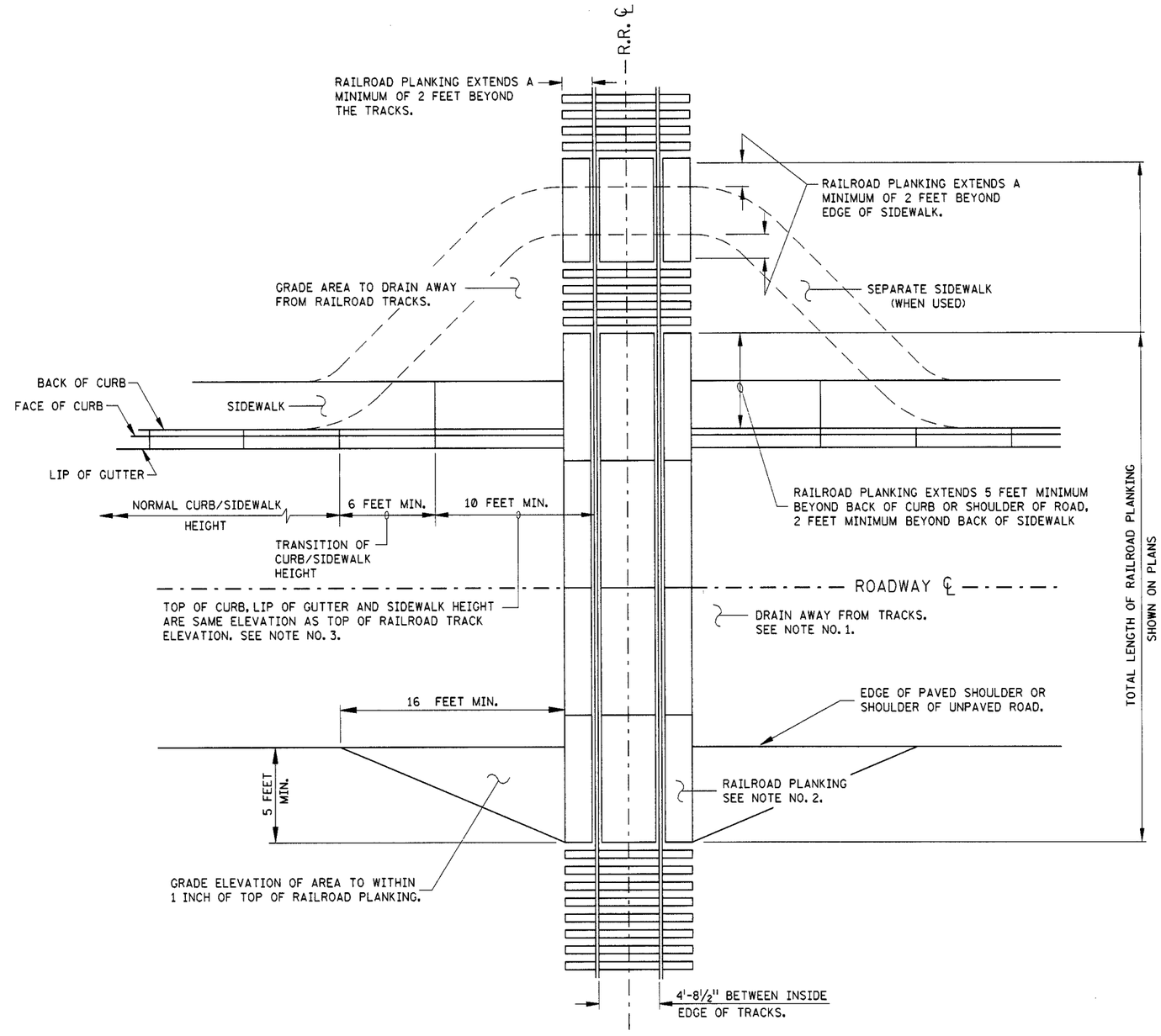

PLAN VIEW

REVISIONS								
NO.	DATE	BY	NO.	DATE	BY	NO.	DATE	BY

SCALES SHOWN ARE FOR 11" X 17" PRINTS ONLY

CADD FILE NAME: r2__0304.std

DRAWING ORIG. DATE: MARCH, 2004

IDAHO TRANSPORTATION DEPARTMENT

BOISE IDAHO

ASSISTANT CHIEF ENGINEER (DEVELOPMENT)

CHIEF ENGINEER

STANDARD DRAWING

HIGHWAY - RAILROAD GRADE CROSSING AREA

English

STANDARD DRAWING NO.

R-2

SHEET 1 OF 1

PROFESSIONAL ENGINEER REGISTERED 9415 3/29/04 STATE OF IDAHO JONATHAN LENHART