Standard Method of Test for

Plastic Fines in Graded Aggregates and Soils by Use of the Sand Equivalent Test

AASHTO Designation: T 176-02

1. SCOPE

1.1. This test is intended to serve as a rapid field test to show the relative proportions of fine dust or claylike material in soils or graded aggregates.

1.2. The following applies to all specified limits in this standard: For the purpose of determining conformance with these specifications, an observed value or a calculated value shall be rounded off "to the nearest unit" in the last right-hand place of figures used in expressing the limiting value, in accordance with R 11, Indicating Which Places of Figures Are to Be Considered Significant in Specified Limiting Values.

1.3. The values stated in SI units are to be regarded as the standard.

1.4. Refer to R 16 for regulatory information for chemicals.

2. REFERENCED DOCUMENTS

2.1. *AASHTO Standards*:

- M 231, Weighing Devices Used in the Testing of Materials
- T 2, Sampling of Aggregates
- T 248, Reducing Samples of Aggregate to Testing Size

3. SIGNIFICANCE AND USE

3.1 This test method is used to determine the proportion of detrimental fines in soils or graded aggregates when performed on the portion passing the 4.75-mm (No. 4) sieve.

4. APPARATUS

4.1. A graduated plastic cylinder, rubber stopper, irrigator tube, weighted foot assembly, and siphon assembly, all conforming to their respective specifications and dimensions shown in Figure 1. Fit the siphon assembly to a 4-L (1 gal) bottle of working calcium chloride solution (see Section 2.8) placed on a shelf 915 ± 25 mm (36 ± 1 in.) above the work surface. In lieu of the specified 4-L (1 gal) bottle, a glass or plastic vat having a larger capacity may be used provided the liquid level of the working solution is maintained between 915 and 1170 mm (36 and 46 inches) above the work surface. (See Figure 2.)

Formatted: Bullets and Numbering

Formatted: Normal

Formatted: Font: 10 pt

Formatted: Font: 10 pt

Formatted: Font: 10 pt

Formatted: Bullets and Numbering

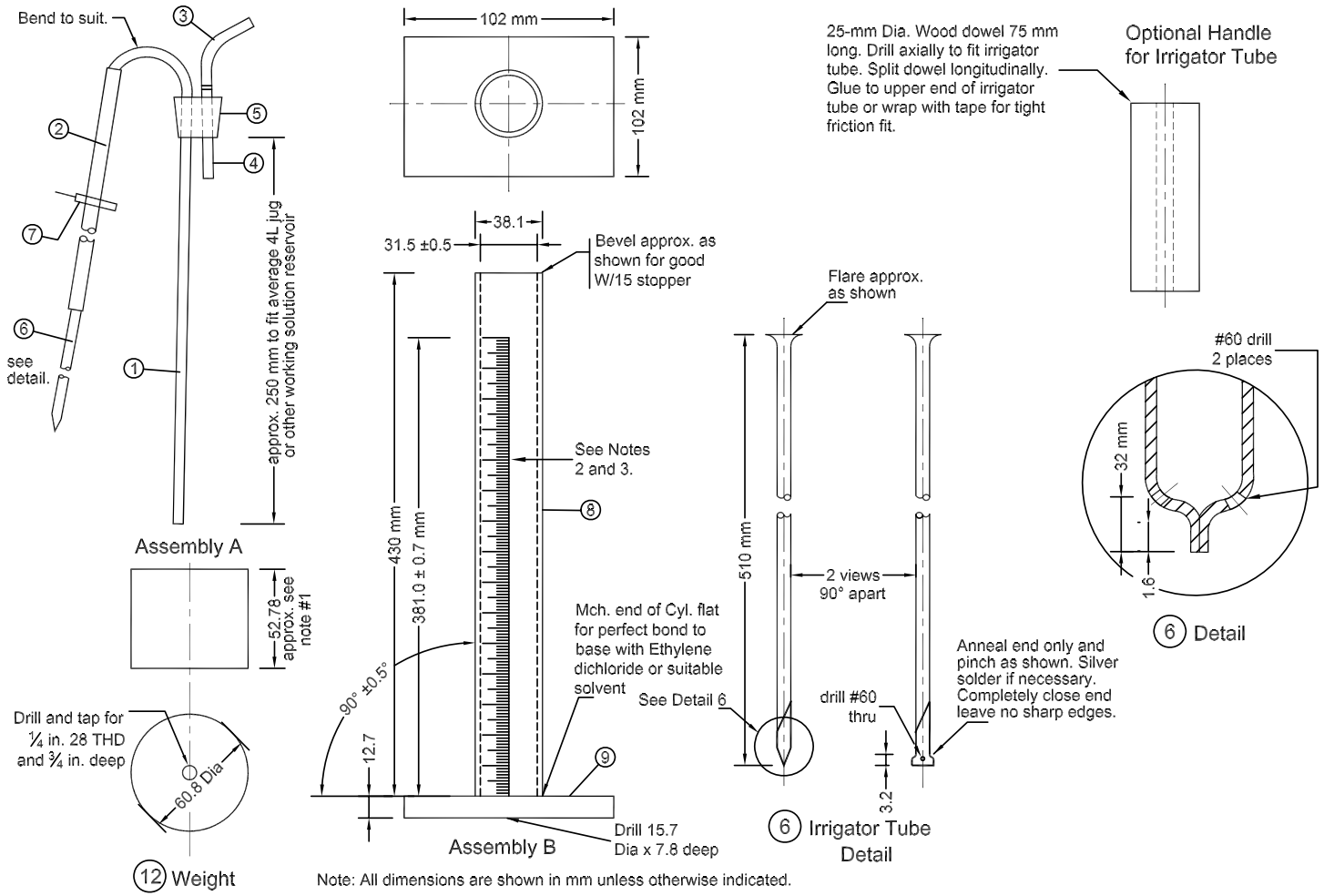

Figure 1—Sand Equivalent Apparatus

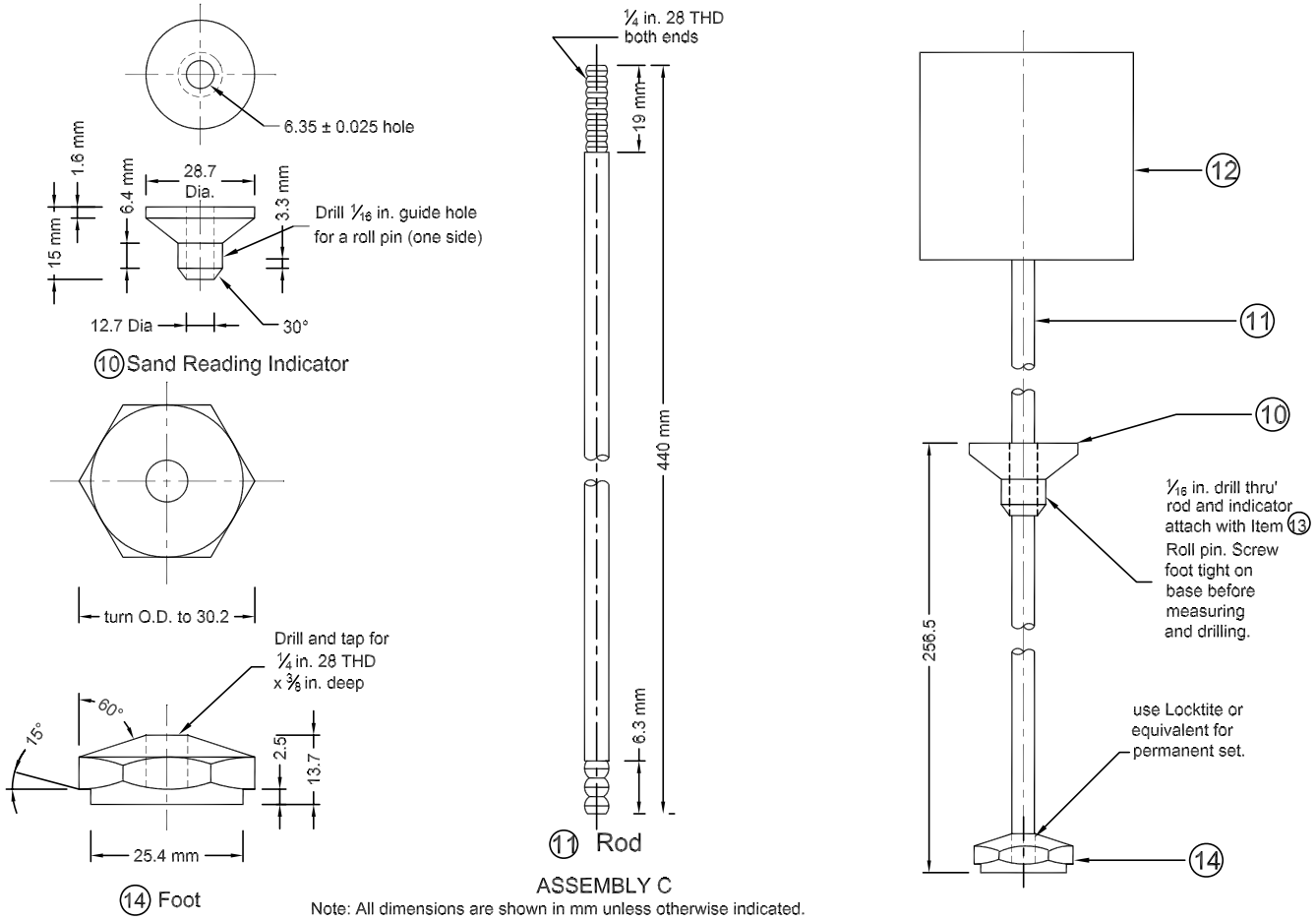

Figure 1—*Continued*

Assembly	No. Reg.	Description	Stock Size	Material	Heat Treatment
A		Siphon Assembly			
	1	Siphon Tube	6.4 dia × 400	Copper Tube	
	2	Siphon Hose	4.8 ID × 1220	Rubber Tube	
	3	Blow Hose	4.8 ID × 50.8	Rubber Tube	
	4	Blow Tube	6.4 dia × 50.8	Copper Tube	
	5	Two-Hole Stopper	No. 6	Rubber	
	6	Irrigator Tube	6.4 OD 0.89 Wall × 500 Stainless Tube, Type 316		
	7	Clamp	Pinchcock, Day, BKH No. 21730 or Equiv		
B		Graduate Assembly			
	8	Tube	38.1 OD × 430	Trans Acrylic Plastic	
	9	Base	12.7 × 102 × 102	Trans Acrylic Plastic	
C		Weighted Foot Assembly			
	10	Sand Reading Indicator	6.4 dia × 14.9	Nylon 101 Type 66 Annealed	
	11	Rod	6.4 dia × 438.2	Brass	
	12	Weight	50.8 dia × 52.78	C.R.SH	
	13	Roll Pin	0.16 dia × 12.7	Steel	
	14	Foot	0.16 Hex × 13.7	Brass	
	15	Solid Stopper	No. 7	Rubber	

Notes: 1. "C" Mounted Foot Assembly to Weigh 1000 ± 5g.

2. Graduations on graduate to be 2.54 mm apart and every tenth mark to be numerically designated as shown. Every fifth line should be approximately 9.5 mm long. All other lines should be approximately 5.5 mm long. Depth to be 0.4 mm. Width to be 0.8 mm across the top.

3. Accuracy of scale to be ± 0.25 mm per 2.5 mm. Error at any point on scale to be ± 0.75 mm of true distance to zero.

4. Glass or stainless steel may be substituted as a material type for the copper siphon and blow tubing.

Figure 1—*Continued*

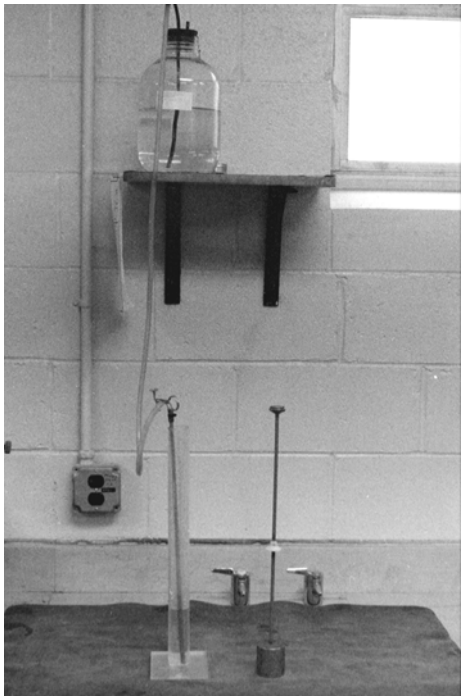

Figure 2—Graduated Cylinder, Irrigator Tube, Weighted Foot Assembly and Siphon

Note 1—An older model of weighted foot assembly has a guide cap that fits over the upper end of the graduated cylinder and centers the rod in the cylinder, and the foot of the assembly has a conical upper surface and three centering screws to center it loosely in the cylinder. The older model does not have the sand reading indicator affixed to the rod (Figure 1), but a slot in the centering screws of the weighted foot is used to indicate the sand reading. Apparatus with the sand reading indicator (Figure 1) is preferred for testing clayey materials.

4.2. A tinned measure, having a capacity of 85 ± 5 mL (3 oz), approximately 57 mm (2.25 in.) in diameter.

Formatted: Bullets and Numbering

4.3. A wide-mouth funnel approximately 100 mm (4 in.) in diameter at the mouth.

4.4. A clock or watch reading in minutes and seconds.

4.5. A mechanical shaker having a throw of 203.2 ± 1.0 mm (8.00 ± 0.04 in.) and operating at 175 ± 2 cycles per minute (2.92 ± 0.03 Hz) (Note 2). Prior to use, fasten the mechanical sand equivalent shaker securely to a firm and level mount.

4.6. A manually operated shaker, 4 capable of producing an oscillating motion at the rate of 100 complete cycles in 45 ± 5 seconds, with a hand-assisted half stroke length of 127 ± 5 mm (5.0± 0.2 in.). The shaker shall be fastened securely to a firm and level mount by bolts or clamps if a large number of determinations are to be made.

Note 2—The mechanical shaker shall be used when performing referee sand equivalent determinations. Either the mechanical or manually operated shaker should be used in lieu of the hand method whenever possible.

4.7. *Stock Solution*—The materials listed in Sections 2.7.1, 2.7.2, or 2.7.3 may be used to prepare the stock solution. A fourth alternative is not to use any biocide provided the time of storage of stock solution is not sufficient to promote the growth of fungi.

Formatted: Bullets and Numbering

4.7.1. Stock solution with formaldehyde.

4.7.1.1. Anhydrous Calcium Chloride, 454 g (1.0 lb) of technical grade.

4.7.1.2. USP Glycerin, 2050 g (1640 mL).

4.7.1.3. Formaldehyde, (40 volume % solution) 47 g (45 mL).

4.7.1.4. Dissolve the 454 g (1.0 lb) of calcium chloride in 1.89 L ($^1/_2$ gal) of distilled water. Cool and filter it through ready pleated rapid filtering paper. Add the 2050 g of glycerin and the 47 g of formaldehyde to the filtered solution, mix well and dilute to 3.78L (1 gal).

4.7.2. Stock solution with glutaraldehyde.

4.7.2.1. Calcium Chloride Dihydrate, 577 g (1.27 lb) of A.C.S. grade.

Note 3—A.C.S. grade calcium chloride dihydrate is specified for the stock solution prepared with glutaraldehyde because tests indicate that impurities in the technical grade anhydrous calcium chloride may react with the glutaraldehyde resulting in an unknown precipitate.

Formatted: Bullets and Numbering

4.7.2.2. USP Glycerin, 2050 g (1640 mL).

4.7.2.3. 1.5-Pentanedial (Glutaraldehyde), 50% solution in water 59 g (53 mL).

4.7.2.4. Dissolve the 577 g (1.27 lb) of calcium chloride dihydrate in 1.89 L ($^1/_2$ gal) of distilled water. Cool and add the 2050 g of glycerin and the 59 g of glutaraldehyde to the solution, mix well, and dilute to 3.78 L (1 gal).

Note 4—1.5 pentanedial, also known as glutaraldehyde, glutaric dialdehyde, and trade name UCARCIDE 250, may be obtained as Glutaraldehyde Solution 50%.[i]

Formatted: Bullets and Numbering

4.7.3. Stock solution with Kathon CG/ICP.

4.7.3.1. Calcium Chloride Dihydrate, 577 g (1.27 lb) of A.C.S. Grade.

4.7.3.2. USP Glycerin, 2050 g (1640 mL).

4.7.3.3. Kathon CG/ICP, 563 g (53 mL).

4.7.3.4. Dissolve the 577 g (1.27 lb) of calcium chloride dihydrate in 1.89 L ($^1/_2$ gal) of distilled water. Cool and add the 2050 g of glycerin and the 63 g of Kathon CG/ICP to the solution, mix well, and dilute to 3.78 L (1 gal).[ii]

4.8. Working calcium chloride solution: Prepare the working calcium chloride by diluting one measuring tin full (85 ± 5 mL) of the stock calcium chloride solution to 3.8 L (1 gal) with water. Use distilled or demineralized water for the normal preparation of the working solution. However, if it is determined that the local tap water is of such purity that it does not affect the test results, it is permissible to use in lieu of distilled or demineralized water except in the event of dispute. Working solutions more than 30 days old shall be discarded.

4.9. A straightedge or spatula, suitable for striking off the excess soil from the tin measure.

4.10. A thermostatically controlled drying oven capable of maintaining a temperature of 110 ± 5ºC (230 ± 9ºF).

4.11. Quartering or splitting cloth, approximately 600 mm (2 ft) square, nonabsorbent material such as plastic or oil cloth.

4.12. *Optional Handle for Irrigation Tube*—A 25-mm diameter wooden dowel to aid in pushing the irrigation tube into firm materials. See Figure 1, Assembly B.

5. CONTROL

5.1. The temperature of the working solution should be maintained at 22 ± 3ºC (72 ± 5ºF) during the performance of this test. If field conditions preclude the maintenance of the temperature range, frequent reference samples should be submitted to a laboratory where proper temperature control is possible. It is also possible to establish temperature correction curves for each material being tested where proper temperature control is not possible. However, no general correction curve should be utilized for several materials even within a narrow range of sand equivalent values. Samples that meet the minimums and equivalent requirement at a working solution temperature below the recommended range need not be subject to reference testing.

6. SAMPLING

4.1 Obtain a sample of the material to be tested in accordance with T 2.

4.2 Reduce the sample according to T 248. The sample shall be of sufficient size to yield 1000g to 1500 g of material passing the 4.75-mm (No. 4) sieve.

4.3 Sieve the sample over a 4.75-mm (No. 4) sieve. All aggregations of fine-grained soil material shall be pulverized to pass the 4.75-mm sieve. All fines shall be cleaned from the particles retained on the 4.75-mm (No. 4) sieve and included with the material passing the 4.75-mm (No. 4) sieve.

4.4 Split or quarter the material passing the 4.75-mm (No. 4) sample to yield 500 g to 750 g of material. Use extreme care to obtain a truly representative portion of the original sample (Note 5).

Note 5—Experiments show that as the amount of material being reduced by splitting or quartering is decreased, the accuracy of providing representative portions is reduced. It is imperative that the sample be split or quartered carefully. When it appears necessary, dampen the material before splitting or quartering, to avoid segregation or loss of fines.

7. SAMPLE PREPARATION

7.1. Prepare the desired number of test samples by one of the following methods:

7.1.1. *Alternate Method No. 1*—Air Dry.

7.1.1.1. Split or quarter enough material from the portion passing the 4.75-mm sieve to fill the 85-mL (3-oz) tin measure so it is slightly rounded above the brim. While filling the measure, tap the bottom edge of the tin on the work table or other hard surface to cause consolidation of the material and allow the maximum amount to be placed in the tin. Strike off the tin measure level full with a spatula or straightedge.

Formatted: Normal, Indent: First line: 36 pt

Formatted: Font: 10 pt

Formatted: Font: 10 pt

Formatted: Font: 10 pt

Formatted: Font: 10 pt

Formatted: Font: 10 pt

Formatted: Font: 10 pt

Formatted: Font: 10 pt

Formatted: Font: 10 pt

Formatted: Font: 10 pt

Formatted: Normal

Formatted: Bullets and Numbering

Deleted: The sand equivalent test shall be performed on soils or graded aggregate materials passing the 4.75-mm (No. 4) sieve. All aggregations of fine-grained soil material shall be pulverized to pass the 4.75-mm sieve, and all fines shall be cleaned from the particles retained on the 4.75-mm sieve and included with the material passing the 4.75-mm sieve.

Deleted: <#>Split or quarter enough of the original sample to yield slightly more than four 85 mL (3 oz) tin measures of material passing the 4.75-mm sieve. Use extreme care to obtain a truly representative portion of the original sample (Note 5).¶
Note 5—Experiments show that as the amount of material being reduced by splitting or quartering is decreased, the accuracy of providing representative portions is reduced. It is imperative that the sample be split or quartered carefully. When it appears necessary, dampen the material before splitting or quartering, to avoid segregation or loss of fines.¶

7.1.2. *Alternate Method No. 2*—Pre-Wet.

7.1.2.1. The sample must be in the proper moisture condition to achieve reliable results. This condition is determined by tightly squeezing a small portion of the thoroughly mixed sample in the palm of the hand. If the cast that is formed permits careful handling without breaking, the correct moisture range has been obtained. If the material is too dry, the cast will crumble and it will be necessary to add water and remix and retest until the material forms a cast. If the material shows any free water it is too wet to test and must be drained and air dried, mixing it frequently to insure uniformity. This overly wet material will form a good cast when checked initially, so the drying process should continue until a squeeze check on the drying material gives a cast which is more fragile and delicate to handle than the original. If the moisture content of the original sample prepared in Section 4.2 is within the limits described above, the test sample may be obtained immediately. If the moisture content is altered to meet these limits, the altered sample should be placed in a pan, covered with a lid or with a damp cloth which does not touch the material, and allowed to stand for a minimum of 15 minutes.

7.1.2.2. After the minimum 15-minute tempering period, place the sample on the splitting cloth and mix by alternately lifting each corner of the cloth and pulling it over the sample toward the diagonally opposite corner, causing the material to be rolled. When the material appears homogeneous, finish the mixing with the sample in a pile near the center of the cloth.

7.1.2.3. Fill the 85-mL (3-oz) tin measure by pushing it through the base of the pile while exerting pressure with the hand against the pile on the side opposite the measure. As the tin is moved through the pile, hold enough pressure with the hand to cause the material to fill the tin to overflowing. Press firmly with the palm of the hand, compacting the material and allowing the maximum amount to be placed in the tin. Strike off the tin measure level full with a spatula or straightedge.

Note 6—Moist test specimens produce lower sand equivalent values than the corresponding over-dry specimens with almost no exceptions; therefore, if a dual specification encompassing both the wet and dry methods of sample preparation is utilized, it will be necessary to determine the appropriate correction for each material since a standard correction does not appear possible. Either method can be employed with equal confidence, however.

7.1.3. *Reference Method (Mechanical Shaker)*—Obtain the 85-mL (3-oz) tin measure of material by one of the alternate methods, Section 4.3.1 or 4.3.2, above; then dry the test sample to constant mass at 110 ± 5ºC (230 ± 9ºF), and cool to room temperature before testing.

Formatted: Bullets and Numbering

8. PROCEDURE

8.1. Start the siphon by forcing air into the top of the solution bottle through the bent copper, glass, or stainless steel blow tube while the pinch clamp is open. The apparatus is now ready for use.

8.2. Siphon 101.6 ± 2.5 mm (4.0 ± 0.1 in.) of working calcium chloride solution into the plastic cylinder. Pour the prepared test sample from the measuring tin into the plastic cylinder using the funnel to avoid spillage. (See Figure 3.) Tap the bottom of the cylinder sharply on the heel of the hand several times to release air bubbles and to promote thorough wetting of the sample.

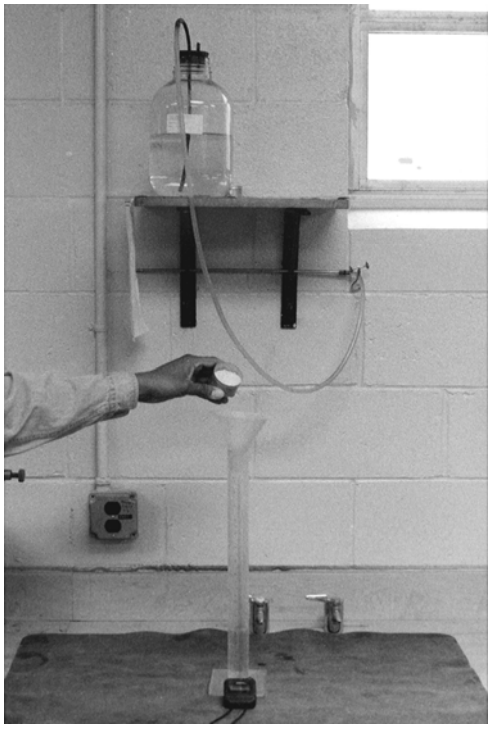

Figure 3—Transfer of Sample from Measuring Tin to Cylinder

8.3. Allow the wetted sample to stand undisturbed for 10 ± 1 minute. At the end of the 10-minute soaking period, stopper the cylinder, then loosen the material from the bottom by partially inverting the cylinder and shaking it simultaneously.

Formatted: Bullets and Numbering

8.4. After loosening the material from the bottom of the cylinder, shake the cylinder and contents by any one of the following methods:

8.4.1. *Mechanical Shaker Method (Reference Method)*—Place the stoppered cylinder in the mechanical sand equivalent shaker, set the timer, and allow the machine to shake the cylinder and contents for 45 ± 1 second.

8.4.2. *Manual Shaker Method*—Secure the stoppered cylinder in the three spring clamps on the carriage of the hand-operated sand equivalent shaker and reset the stroke counter to zero. Stand directly in front of the shaker and force the pointer to the stroke limit marker painted on the backboard by applying an abrupt horizontal thrust to the upper portion of the right hand spring steel strap. Then remove the hand from the strap and allow the spring action of the straps to move the carriage and cylinder in the opposite direction without assistance or hindrance. Apply enough force to the right hand spring steel strap during the thrust portion of each stroke to move the pointer to the stroke limit marker by pushing against the strap with the ends of the fingers to maintain a smooth oscillating motion. The center of the stroke limit marker is positioned to provide the proper stroke length and its width provides the maximum allowable limits of variation. The proper shaking action is accomplished only when the tip of the pointer reverses direction within the marker limits. Proper shaking action can best be maintained by using only the forearm and wrist action to propel the shaker. Continue the shaking action for 100 strokes.

8.4.3. *Hand Method*—Hold the cylinder in a horizontal position as illustrated in Figure 4 and shake it vigorously in a horizontal linear motion from end to end. Shake the cylinder 90 cycles in approximately 30 seconds using a throw of 229 ± 25 mm (9 ± 1 in.). A cycle is defined as a complete back and forth motion. To properly shake the cylinder at this speed, it will be necessary for the operator to shake with the forearms only, relaxing the body and shoulders.

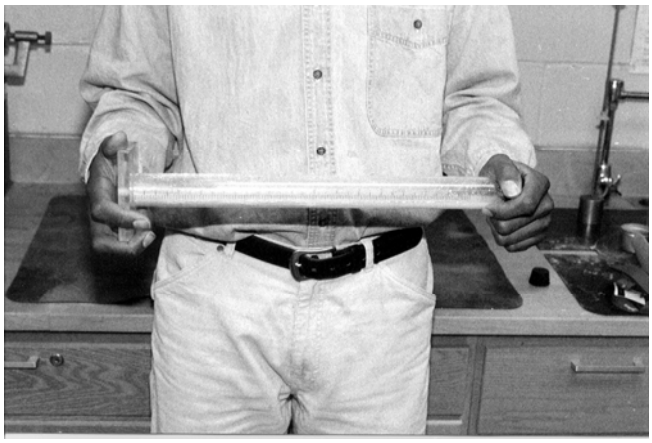

Figure 4—Using Hand Method of Shaking

8.5. Following the shaking operation, set the cylinder upright on the work table and remove the stopper.

Formatted: Bullets and Numbering

8.6. *Irrigation Procedure*—Insert the irrigator tube in the cylinder and rinse material from the cylinder walls as the irrigator is lowered. Force the irrigator through the material to the bottom of the cylinder by applying a gentle stabbing and twisting action while the working solution flows from the irrigator tip. This flushes the fine material into suspension above the coarser sand particles. Continue to apply the stabbing and twisting action while flushing the fines upward until the cylinder is filled to the 381-mm mark. Then raise the irrigator slowly without shutting off the flow so that the liquid level is maintained at about 381 mm while the irrigator is being withdrawn. Regulate the flow just before the irrigator is entirely withdrawn and adjust the final level to 381 mm. Final level as judged by the bottom of the meniscus shall be between the top two graduations on the tube but shall not be above the 381-mm level.

Note 7—For certain soils, particularly on crushed materials, the stabbing action may not be possible. For these materials, the irrigation technique is as follows: Continue to apply a twisting action as the irrigation tube is slowly withdrawn. As the tube is withdrawn, it is essential that as many fines be flushed upward until the cylinder is filled to the 381mm mark.

8.7. Allow the cylinder and contents to stand undisturbed for 20 minutes ± 15 seconds. Start the timing immediately after withdrawing the irrigator tube.

Formatted: Bullets and Numbering

8.8. At the end of the 20-minute sedimentation period, read and record the level of the top of the clay suspension. This is referred to as the “clay reading.” If no clear line of demarcation has formed at the end of the specified 20-minute sedimentation period, allow the sample to stand undisturbed until a clay reading can be obtained, then immediately read and record the level of the top of the clay suspension and the total sedimentation time. If the total sedimentation time exceeds 30 minutes, rerun the test using three individual samples of the same material. Read and record the clay column height of that sample requiring the shortest sedimentation period only.

8.9. After the clay reading has been taken, the “sand reading” shall be obtained by one of the following methods:

8.9.1. When using the weighted foot assembly having the sand indicator on the rod of the assembly, place the assembly over the cylinder and gently lower the assembly toward the sand. Do not allow the indicator to hit the mouth of the cylinder as the assembly is being lowered. As the weighted foot comes to rest on the sand, tip the assembly toward the graduations on the cylinder until the indicator touches the inside of the cylinder. Subtract 254 mm (10 in.) from the level indicated by the extreme top edge of the indicator and record this value as the “sand reading.” (See Figure 5.)

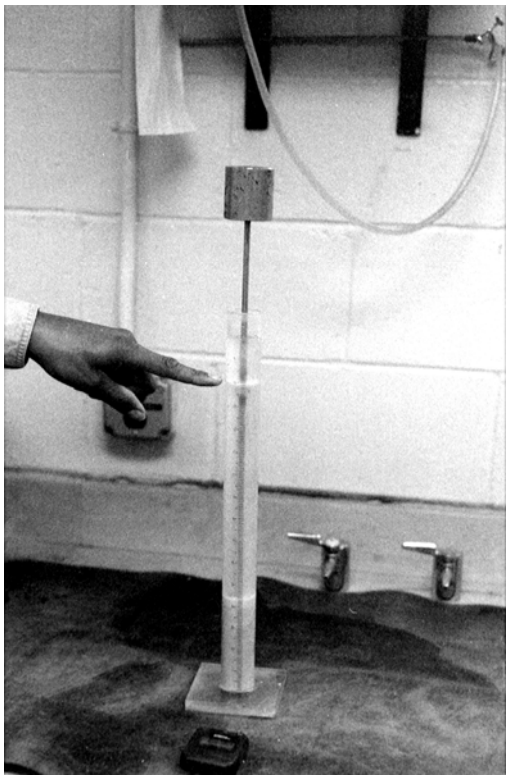

Figure 5—Sand Reading

8.9.2. If an older model weighted foot assembly having centering screws is used, keep one of the centering screws in contact with the cylinder wall near the graduations so that it can be seen at all times while the assembly is being lowered. When the weighted foot has come to rest on the sand, read the level of the centering screw and record this value as the “sand reading.”

Formatted: Bullets and Numbering

8.10. If clay or sand readings fall between 2.5-mm (0.1-in.) graduations, record the level of the higher graduation as the reading. For example, a clay reading of 7.95 would be recorded as 8.0, and a sand reading of 3.22 would be recorded as 3.3.

Note 8—Samples obtained from aggregate proposed for use in hot-asphalt paving mixtures shall be prepared by oven-drying if acceptance of the material is based on tests on material that has passed through a hot-plant drier.

9. CALCULATIONS

Formatted: Bullets and Numbering

9.1. Calculate the sand equivalent (SE) to the nearest 0.1 using the following formula:

$$SE = \frac{\text{Sand Reading} \times 100}{\text{Clay Reading}} \qquad (1)$$

Formatted: Bullets and Numbering

9.2. If the calculated sand equivalent is not a whole number, report it as the next higher whole number, as in the following example:

$$SE = \frac{3.3}{8} \times 100 = 41.25, \qquad (2)$$

which is reported as 42.

Formatted: Bullets and Numbering

9.3. If it is desired to average a series of sand equivalent values, average the whole number values determined as described above. If the average of these values is not a whole number, raise it to the next higher whole number, as in the following example:
Calculated SE values: 41.2, 43.8, 40.9.

After raising each to the next higher whole number, they become: 42, 44, 41.

The average of these values is then determined:

$$\frac{42 + 44 + 41}{3} = 42.3 \qquad (3)$$

Formatted: Bullets and Numbering

9.3.1. Since the average value is not a whole number, it is raised to the next higher whole number and the reported averages and equivalent value is reported as 43.

10. PRECAUTIONS

10.1. Perform the test in a location free of vibrations; vibrations may cause the suspended material to settle at a rate greater than normal.

10.2. Do not expose the plastic cylinders to direct sunlight any more than is necessary.

10.3. *Removal of Organic Growth*—Occasionally it may be necessary to remove an organic growth from the working calcium chloride solution container and from the inside of the flexible tubing and irrigator tube. This organic material can easily be seen as a slimy substance in the solution. To remove this growth, prepare a cleaning solvent by diluting sodium hypochlorite[iii] with an equal quantity of water. Fill the solution container with the prepared cleaning solvent, allow about a liter of the cleaning solvent to flow through the siphon assembly and irrigator tube, then place the pinch clamp on the end of the tubing to cut off the flow of solvent and to hold the solvent in the tube. Refill the container and allow to stand overnight. After soaking, allow the cleaning solvent to flow out through the siphon assembly and irrigator tube. Remove the siphon assembly from the solution container and rinse both with clear water. The irrigator tube and siphon assembly can be rinsed easily by attaching a hose between the tip of the irrigator tube and water faucet and backwashing fresh water through the tube.

10.4. Occasionally the holes in the tip of the irrigator tube may become clogged by a particle of sand. If the obstruction cannot be freed by any other method, use a pin or other sharp object to force it out, using extreme care not to enlarge the size of the opening.

11. OPERATOR QUALIFICATIONS

11.1. An operator must meet certain qualification requirements before being allowed to perform the sand equivalent test by either the manual method or the hand method. Although the qualification

requirements are identical for both methods, an operator shall be permitted to use only that method for which qualification has been met.

11.1.1. The operator must be capable of obtaining consistent sand equivalent test results on representative samples of any given material when the test is performed in accordance with the prescribed procedure for that particular method. An operator's test results are considered to be consistent if the individual results of three tests performed on representative samples of any given material do not vary by more than ±4 points from the average of these tests.

11.1.2. The average of three tests by an operator on any given material must correspond within ±4 points with the average of three tests on the same material when tested using the mechanical shaker method (Reference Method).

11.2. If an operator is not capable of obtaining consistent results with the manual shaker method, or if results do not agree with results obtained by the mechanical shaker method, the operator is not to perform the sand equivalent test using the manual shaker until perfecting the technique sufficiently to bring test results into the specified limits without adjusting the required number of cycles.

11.3. If an operator is capable of obtaining consistent results when qualifying for the hand method, but the average of the results does not agree within the prescribed limits of the average of three results by the mechanical shaker method, the operator shall adjust the number of shaking cycles sufficiently to cause the results to agree with those by the mechanical shaker method. Determine the required adjustment in the shaking cycles by the following method:

11.3.1. Estimate the adjusted number of shaking cycles required. Increase the number of cycles to obtain a lower sand equivalent test result or decrease the number of cycles to obtain a higher sand equivalent test result. Perform three tests at the adjusted number of cycles. Strive to maintain the prescribed shaking rate of 180 cycles per minute. Compare the average of the three test results using the adjusted number of strokes with the average obtained by the mechanical shaker method. If necessary, readjust the number of shaking cycles until the average result of three tests at the adjusted number of cycles is within ±4 points of the average obtained by the mechanical shaker method.

11.4. The ±4 points is a minimum qualification and should not be considered perfection. Each operator should strive to perfect the technique to obtain results equivalent to those of the mechanical shaker method. Operators should be required to perform qualification tests whenever their results tend to vary appreciably from those obtained using the mechanical shaker method. Qualification tests should be made at regular intervals to assure a reasonable degree of accuracy and standardization of test results.

---

[i] Available from Aldrich Chemical Company, P.O. Box 2060, Milwaukee, WI 53201 or Fisher Scientific, 711 Forbes Ave., Pittsburgh, PA 15219.

[ii] Kathon CG/ICP may be obtained from Rohm and Hass Chemical Company, Independence Mall West, Philadelphia, PA 19105. Kathon CG/ICP contains the following components: 5-chloro-2-methyl-4-isothiazolin-3-one; 2-methyl-4 isothiazolin-3-one; magnesium chloride; and magnesium nitrate.

[iii] Clorox® or its equivalent has been found satisfactory for this purpose.