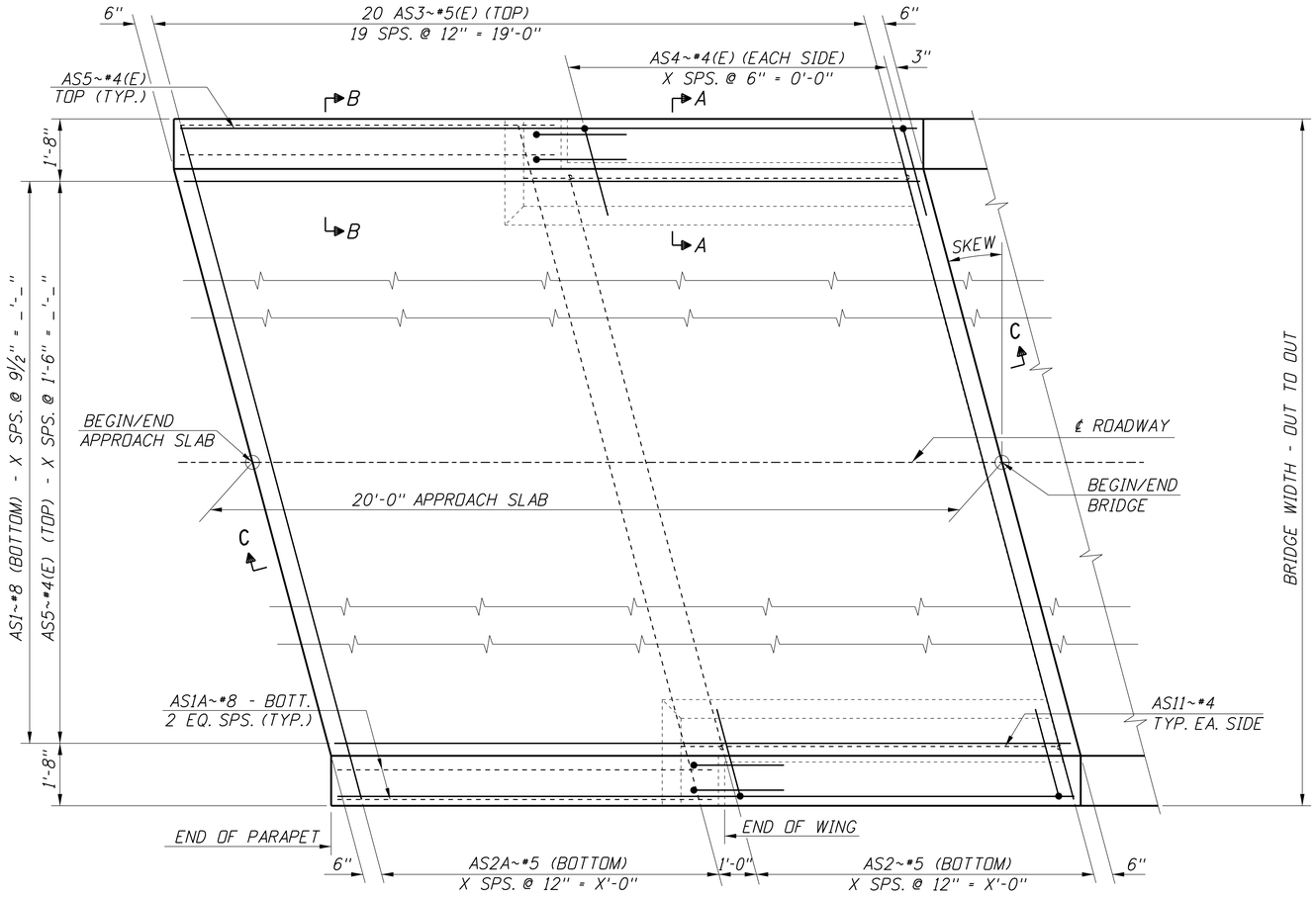

APPROACH SLAB - PLAN
½"=1'-0"

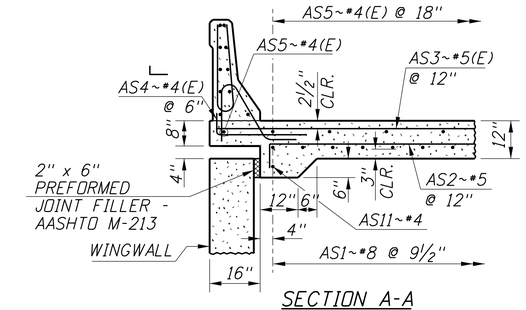

SECTION A-A
½"=1'-0"

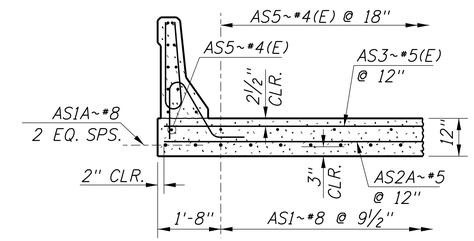

SECTION B-B
½"=1'-0"

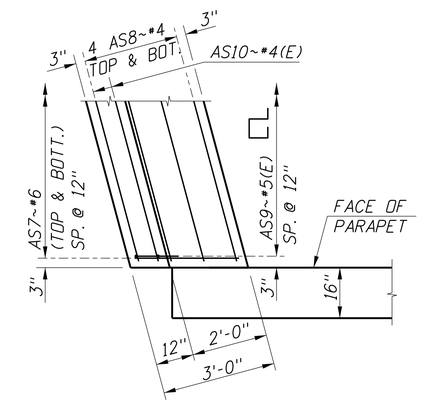

PLAN
CONCRETE SLEEPER BEAM
½"=1'-0"

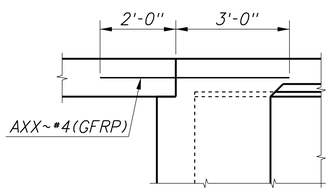

GFRP BAR DETAIL
½"=1'-0"

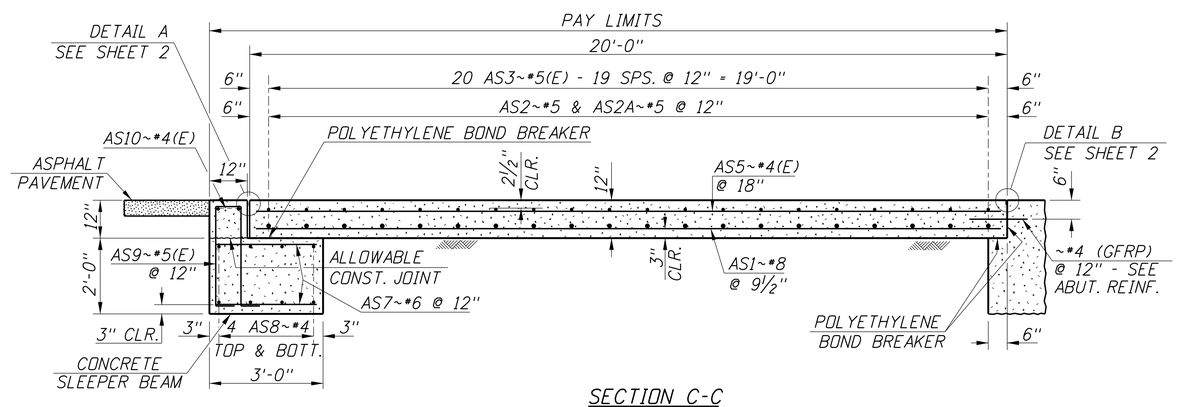

SECTION C-C
½"=1'-0"

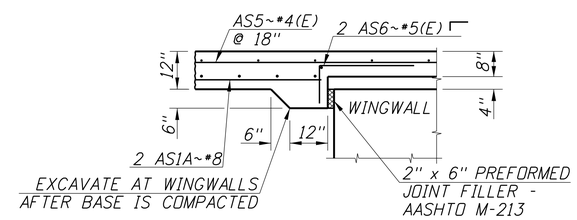

VIEW D-D
½"=1'-0"

REVISIONS			
NO.	DATE	BY	DESCRIPTION
△			
△			
△			
△			
△			

DESIGNED
DESIGN CHECKED
DETAILED
DWG. CHECKED
CORRECTIONS

SCALES SHOWN ARE FOR 34" X 22" PRINTS ONLY
CADD FILE NO. \cadds\std_dgns\b02_1b.dgn
DRAWING DATE: MAY 2014

ORIGINAL SIGNED BY:
DATE SIGNED: DATE
ORIGINAL STORED AT ITD BRIDGE SECTION

IDAHO TRANSPORTATION DEPARTMENT

English
PROJECT NO.

APPROACH SLAB DETAILS - SHEET 1
ASPHALT PAVEMENT
SKEW > 0° (45° MAX.), NO ABUTMENT JOINT

BRIDGE PLANS
BRIDGE LRFD MANUAL, PAGE B2.1B
COUNTY | KEY NO.
BRIDGE DRAWING NO. | SHEET OF