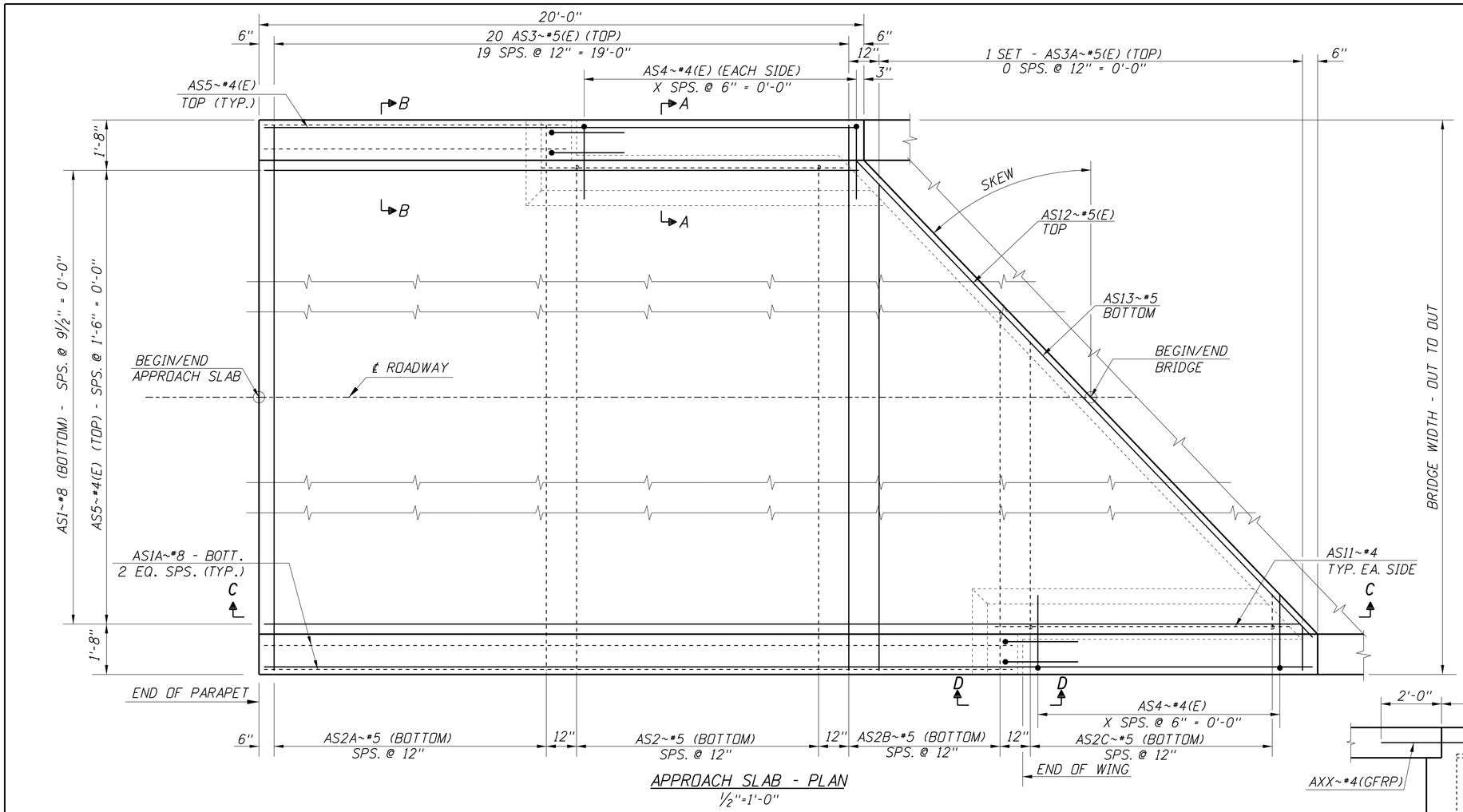


APPROACH SLAB - PLAN
½"=1'-0"

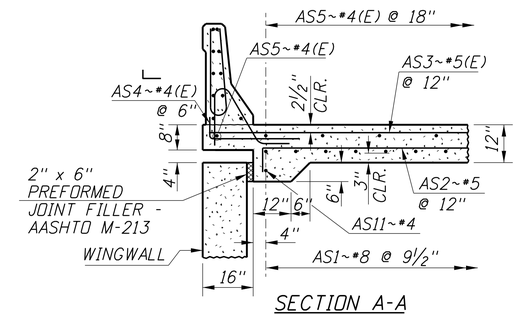


SECTION A-A
½"=1'-0"

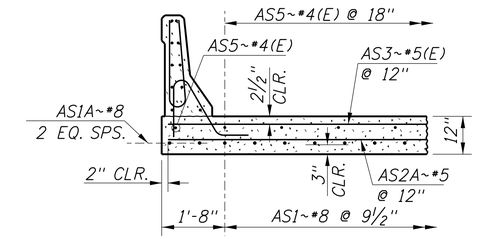


SECTION B-B
½"=1'-0"

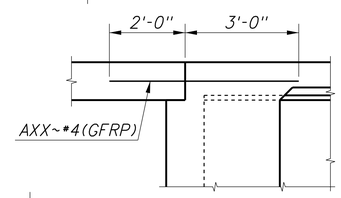


GFRP BAR DETAIL
½"=1'-0"

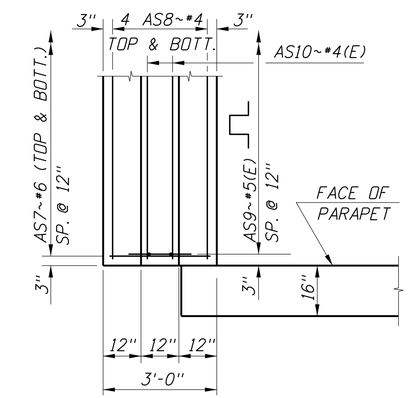


PLAN
CONCRETE SLEEPER BEAM
½"=1'-0"

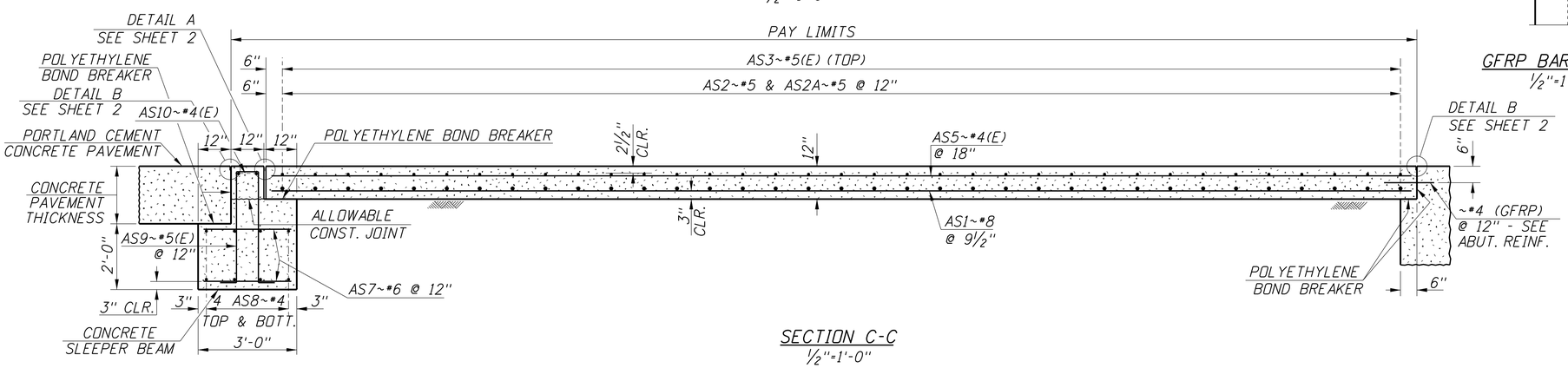


SECTION C-C
½"=1'-0"

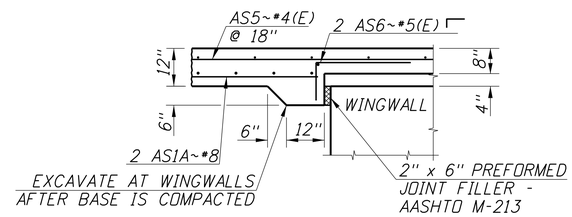


VIEW D-D
½"=1'-0"

| REVISIONS | | | |
|---|---|---|---|
| NO. | DATE | BY | DESCRIPTION |
| △ | | | |
| △ | | | |
| △ | | | |
| △ | | | |
| △ | | | |

DESIGNED
DESIGN CHECKED
DETAILED
DWG. CHECKED
CORRECTIONS

SCALES SHOWN ARE FOR 34" X 22" PRINTS ONLY

CADD FILE NO.
\cadds\std_dgns\
b02_1d.dgn

DRAWING DATE:
MAY 2014

ORIGINAL SIGNED BY:

DATE SIGNED: DATE

~~DATE~~ ~~ORIGINAL STORED AT ITD BRIDGE SECTION~~

IDAHO TRANSPORTATION DEPARTMENT

**English**

PROJECT NO.

# APPROACH SLAB DETAILS - SHEET 1

CONCRETE PAVEMENT
SKEW > 0° (45° MAX.), NO ABUTMENT JOINT

BRIDGE PLANS

BRIDGE LRFD MANUAL, PAGE B2.1D

| COUNTY | KEY NO. |
|---|---|
| BRIDGE DRAWING NO. | SHEET OF |