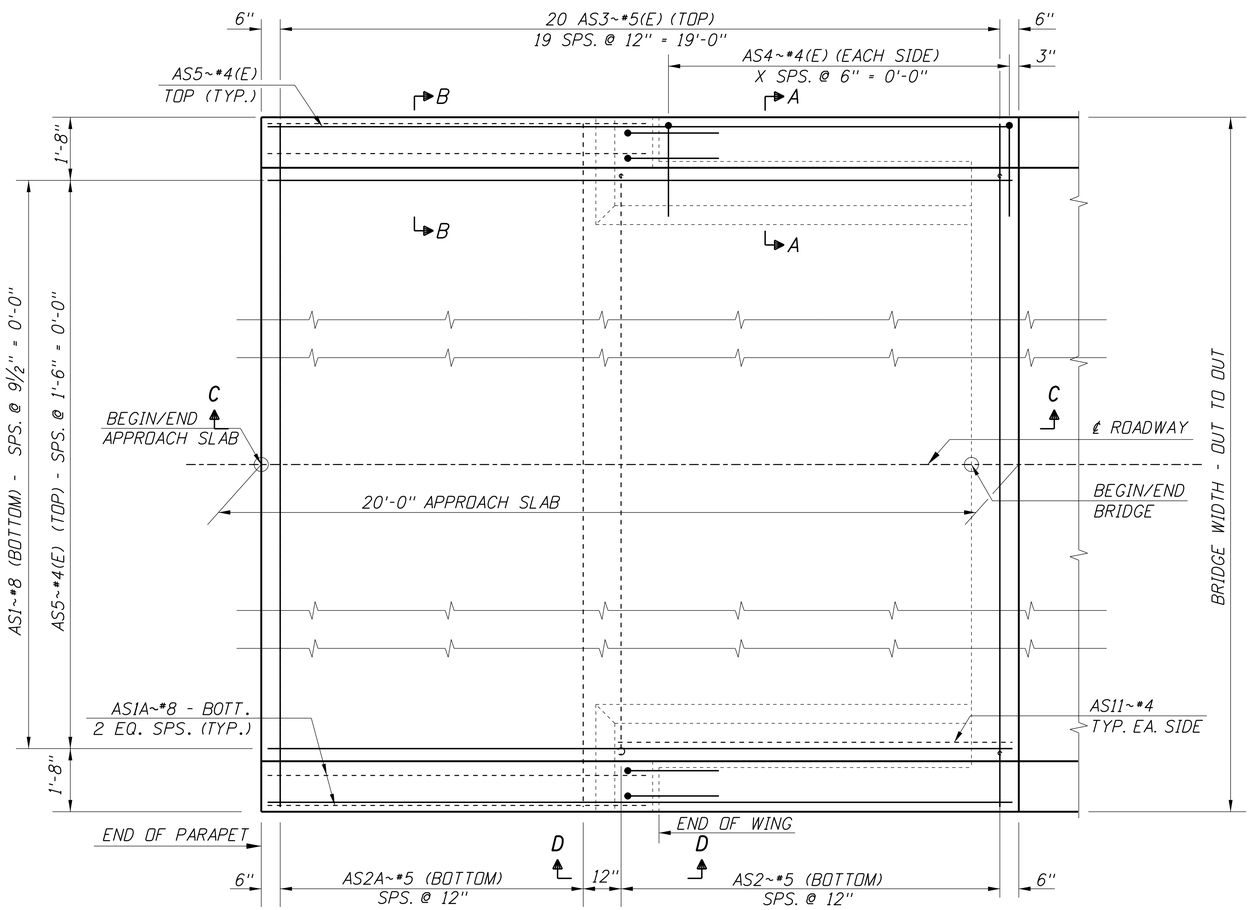

APPROACH SLAB - PLAN
½"=1'-0"

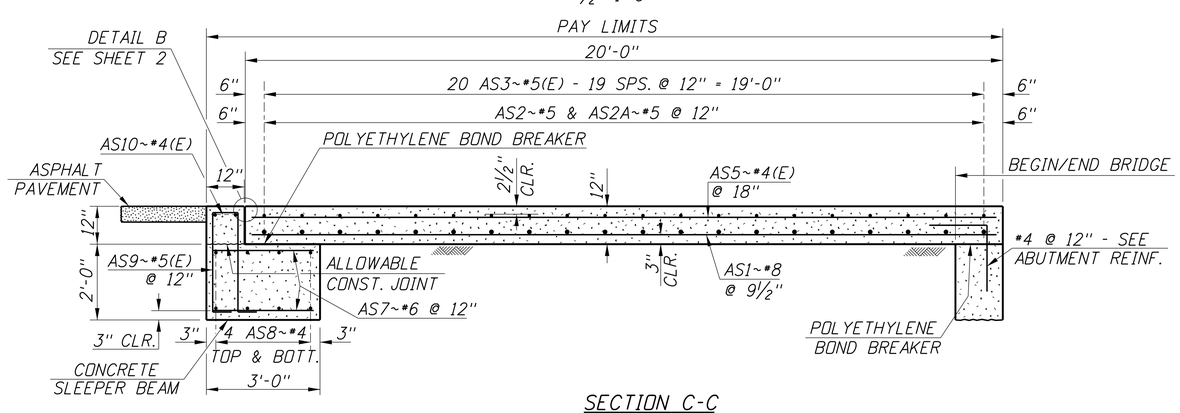

SECTION C-C
½"=1'-0"

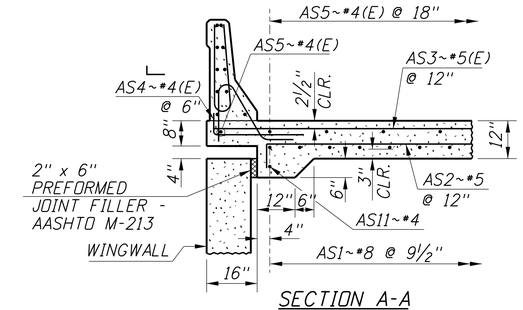

SECTION A-A
½"=1'-0"

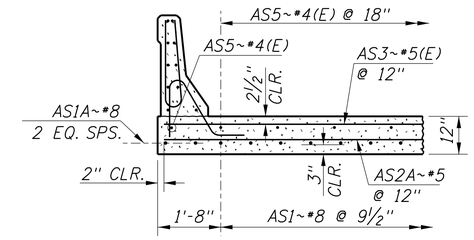

SECTION B-B
½"=1'-0"

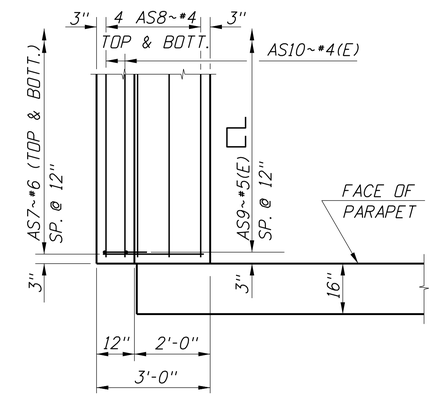

PLAN
CONCRETE SLEEPER BEAM
½"=1'-0"

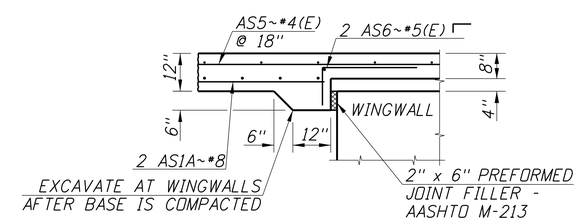

VIEW D-D
½"=1'-0"

REVISIONS			
NO.	DATE	BY	DESCRIPTION
△			
△			
△			
△			
△			

DESIGNED
DESIGN CHECKED
DETAILED
DWG. CHECKED
CORRECTIONS

SCALES SHOWN ARE FOR 34" X 22" PRINTS ONLY
CADD FILE NO.
\cadds\std_dgns\
b02_1e.dgn
DRAWING DATE:
MAR 2015

ORIGINAL SIGNED BY:
DATE SIGNED: DATE
DATE FINAL STORED AT ITD BRIDGE SECTION

IDAHO TRANSPORTATION DEPARTMENT

English

PROJECT NO.

APPROACH SLAB DETAILS - SHEET 1

ASPHALT PAVEMENT
SKEW = 0°, JOINT AT ABUTMENT

BRIDGE PLANS
BRIDGE LRFD MANUAL, PAGE B2.1E

COUNTY	KEY NO.
BRIDGE DRAWING NO.	SHEET OF