DRAIN NOTES

1. DRAIN ASSEMBLY SHALL BE GALVANIZED AFTER FABRICATION ~ HOT DIP AS PER AASHTO M-111.
2. ALL SEAMS NOT SHOWN WELDED ARE TO BE SEAL WELDED FOR GALVANIZING. SEAMS ON TOP OF DRAIN SHALL BE GROUND SMOOTH.
3. SHOP DRAWINGS SHALL BE SUBMITTED TO THE ENGINEER ELECTRONICALLY IN PDF FORMAT IN ACCORDANCE WITH SECTION 504 AND SHALL INCLUDE COMPLETE DIMENSIONS AND DETAILS OF FABRICATION. MATERIALS BEING USED SHALL BE CLEARLY SPECIFIED. BEFORE PROJECT COMPLETION, THE CONTRACTOR SHALL FURNISH THE ENGINEER ELECTRONIC AS-BUILT SHOP DRAWINGS IN PDF FORMAT.
4. FIELD BEND OR CUT ANY BARS THAT CONFLICT WITH DRAINS.
5. STRUCTURAL STEEL SHALL BE AASHTO M-270 GR. 36. STRUCTURAL STEEL TUBING SHALL BE ASTM A-500 OR A-501.
6. CAP SCREWS SHALL BE 5/8" - 11 UNC x 1 3/4" STAINLESS STEEL HEXAGON SOCKET HEAD CAP SCREWS 18-8 SS.
7. THE COST OF FURNISHING AND INSTALLING THE DRAIN ASSEMBLIES SHALL BE INCLUDED IN THE UNIT PRICE BID FOR CONCRETE CLASS 40A.

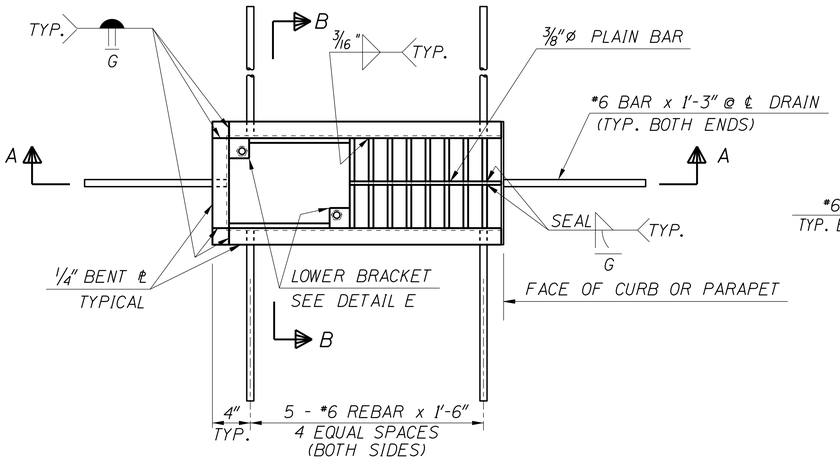

DRAIN PLAN
1 1/2"=1'-0"
(REMOVABLE GRATING NOT SHOWN)

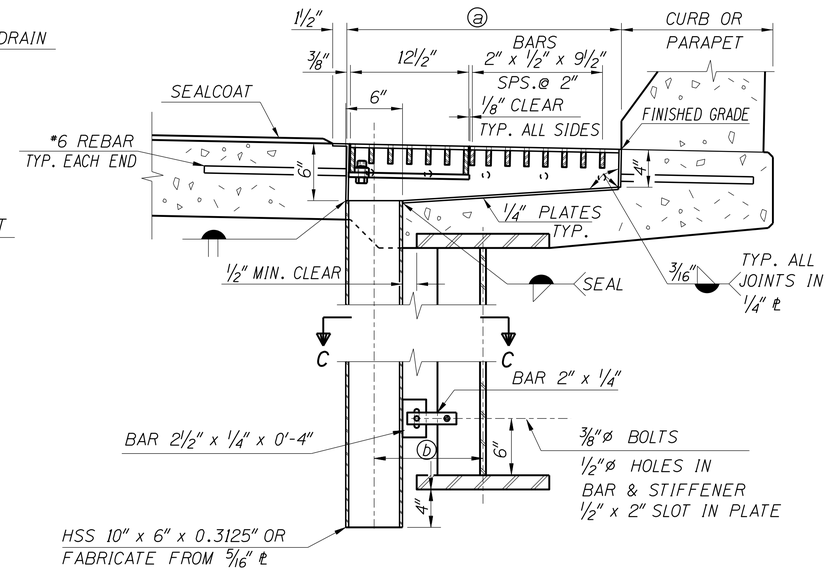

SECTION A-A
1 1/2"=1'-0"

DIMENSION	
ⓐ	
ⓑ	

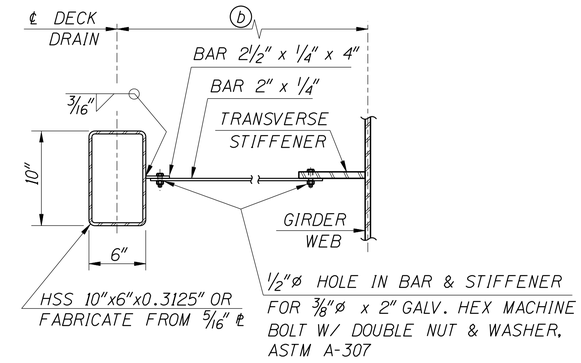

SECTION C-C
1 1/2"=1'-0"

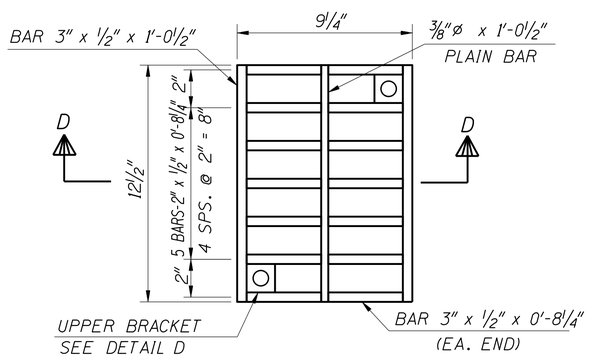

REMOVABLE GRATE
3"=1'-0"

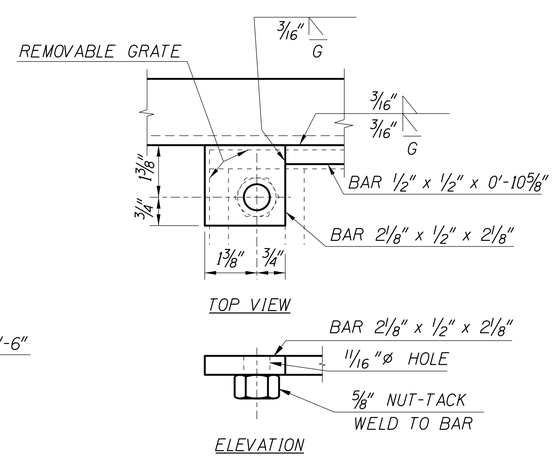

DETAIL E
LOWER BRACKETS

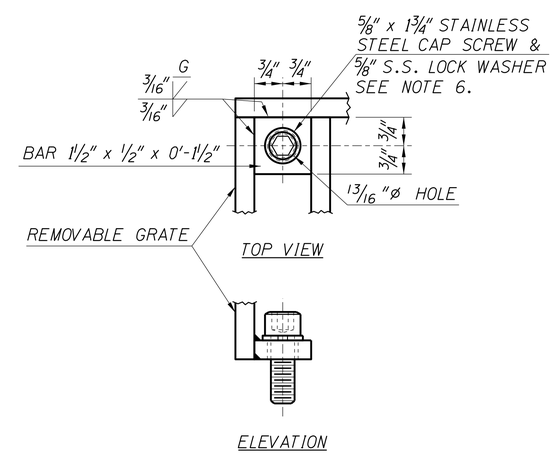

DETAIL D
UPPER BRACKETS

ALTERNATE CONNECTION DETAIL
1 1/2"=1'-0"

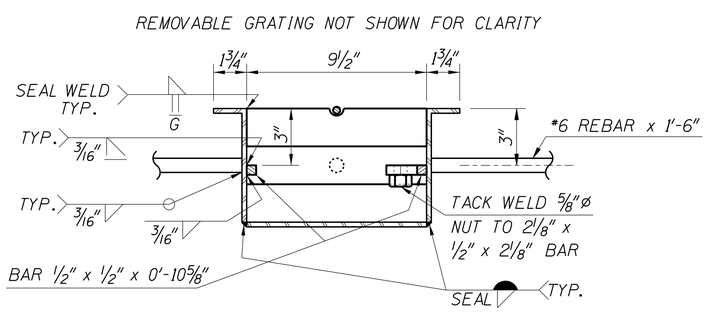

SECTION B-B
3"=1'-0"

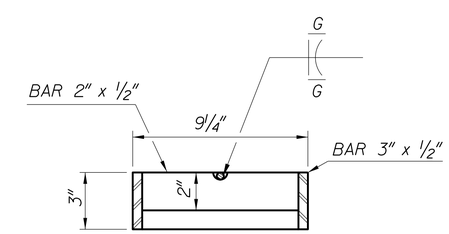

SECTION D-D
3"=1'-0"

REVISIONS			
NO.	DATE	BY	DESCRIPTION
△			
△			
△			
△			
△			

DESIGNED
DESIGN CHECKED
DETAILED
DWG. CHECKED
CORRECTIONS

SCALES SHOWN ARE FOR 34" X 22" PRINTS ONLY
CADD FILE NO. \cadds\std_dgns\ b02_2b.dgn
DRAWING DATE: MAR 2015

ORIGINAL SIGNED BY:
DATE SIGNED: DATE
ORIGINAL STORED AT ITD BRIDGE SECTION

IDAHO TRANSPORTATION DEPARTMENT

English
PROJECT NO.

BRIDGE DRAIN DETAILS - TYPE 2

BRIDGE PLANS
BRIDGE LRFD MANUAL, PAGE B2.2B
COUNTY | KEY NO.
BRIDGE DRAWING NO. | SHEET OF