PRESTRESSED GIRDER SCHEDULE

GIRDERS		PRESTRESS FORCE ~ KIPS		CONCRETE STRENGTH ~ PSI		GIRDER DIMENSIONS								END DETAIL C.G. OF STRAND			
NO.	LOCATION	FINAL AFTER LOSSES	INITIAL BEFORE LOSSES	AT RELEASE f'ci	AT 28 DAYS f'c	(A)	(B)	(C) LEFT	(C) RIGHT	(D) LEFT	(D) RIGHT	(E)	(F)	LEFT	RIGHT	(b) ℄ BRG.	(a) MID SPAN

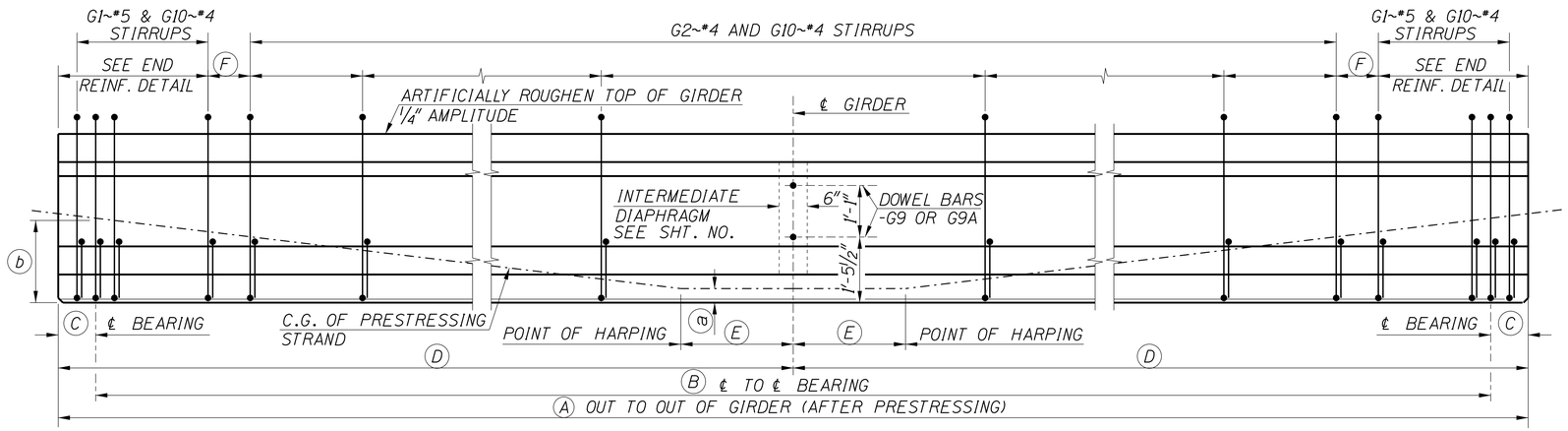

GIRDER ELEVATION AND STIRRUP LAYOUT
NOT TO SCALE

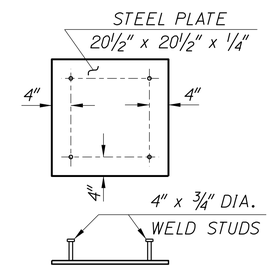

DETAIL A
3/4"=1'-0"

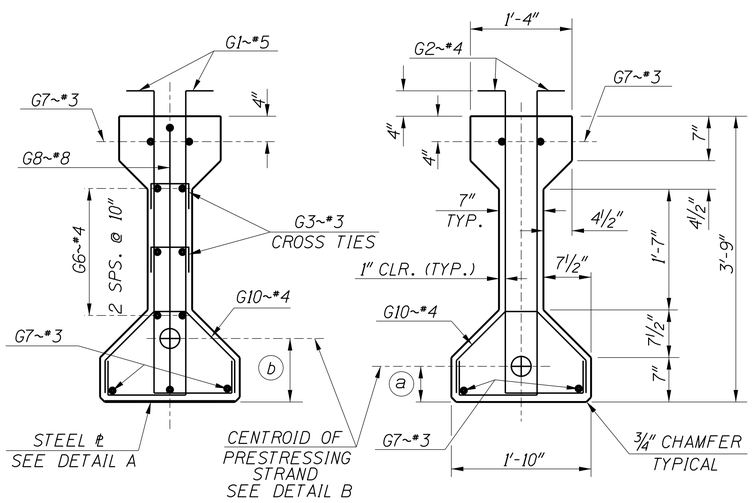

SECTION AT ℄ BEARING
1"=1'-0"

SECTION AT ℄ SPAN
1"=1'-0"

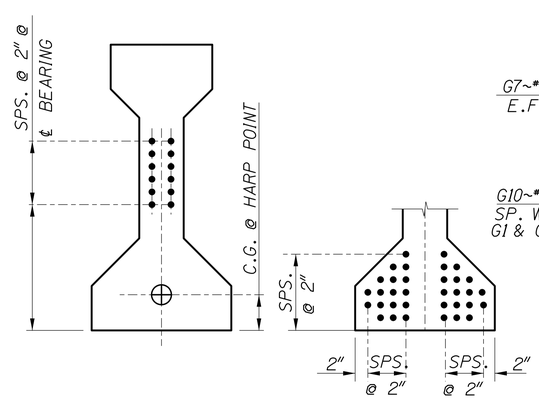

HARP STRAND
STRAIGHT STRAND

DETAIL B
N.T.S.

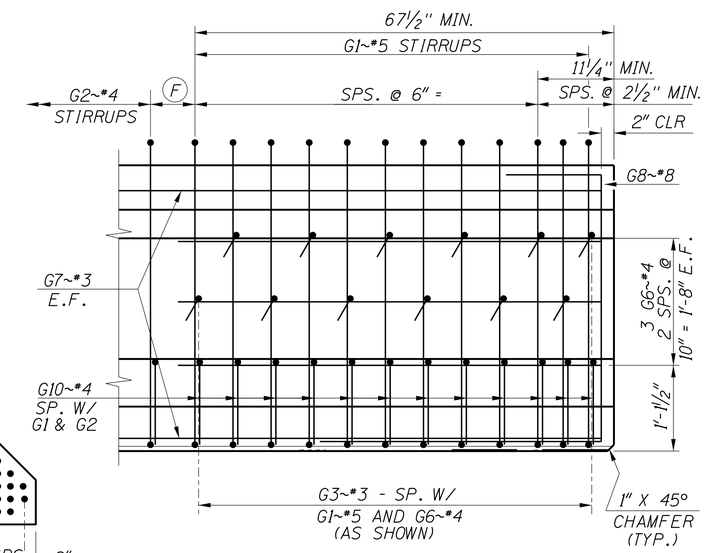

END REINFORCEMENT DETAIL
1"=1'-0"

REINFORCEMENT DIAGRAM

	MARK	SIZE	GRADE	SKETCH
*	G1	#5	60	4'-0"; 1'-0 1/2"; 5 1/2"
*	G2	#4	60	
*	G3	#3	60	5"
	G4	#5	60	4'-8"
	G4A	#5	60	2'-4"; 10"
	G5	#6	60	
	G5A	#6	60	
	G6	#4	60	
	G7	#3	60	(A) - 4"
	G8	#8	60	3'-6"; 3'-6"; 1'-3"
	G9	#4	60	4'-0"
	G9A	#4	60	2'-11"; 8"
*	G10	#4	60	10"; 5"; 45°; 5 1/2"

NOTES

ALL DIMENSIONS TO STIRRUPS AND DOWEL BARS ARE GIVEN AT ℄ OF GIRDER.

SEE PRESTRESSED AASHTO GIRDER DETAILS SHEET FOR NOTES, DIAPHRAGM DOWEL DETAILS, END DETAILS AND DEFLECTION DATA.

ALL BEND DETAILS TO BE ACCORDING TO LATEST ACI STANDARD PRACTICE.

* STIRRUP AND TIE HOOK BEND DIMENSIONS. STIRRUPS AND TIES SHALL HAVE A MINIMUM 1" COVER OUTSIDE OF BARS.

GIRDER WEIGHT _____ 583 LBS. PER FOOT

REVISIONS			
NO.	DATE	BY	DESCRIPTION
△			
△			
△			
△			
△			

DESIGNED
DESIGN CHECKED
DETAILED
DWG. CHECKED
CORRECTIONS

SCALES SHOWN ARE FOR 34" X 22" PRINTS ONLY
CADD FILE NO. \cadds\std_dgns\b05_2b.dgn
DRAWING DATE: JUNE 2013
DATE: _____

IDAHO TRANSPORTATION DEPARTMENT

English
PROJECT NO.
0000

AASHTO TYPE III PRESTRESSED GIRDER
PROJECT
LOCATION
STA

BRIDGE PLANS
BRIDGE LRFD MANUAL PAGE B5.2B

COUNTY	KEY NO.
ABC	0000
BRIDGE DRAWING NO.	SHEET
00000	0 OF 0