# PRESTRESSED GIRDER SCHEDULE

| GIRDERS | | PRESTRESS FORCE ~ KIPS | | CONCRETE STRENGTH ~ PSI | | GIRDER DIMENSIONS | | | | | | | | END DETAIL | | C.G. OF STRAND | |
|---|---|---|---|---|---|---|---|---|---|---|---|---|---|---|---|---|---|
| NO. | LOCATION | FINAL AFTER LOSSES | INITIAL BEFORE LOSSES | AT RELEASE f'ci | AT 28 DAYS f'c | (A) | (B) | (C) LEFT | (C) RIGHT | (D) LEFT | (D) RIGHT | (E) | (F) | LEFT | RIGHT | (b) ℄ BRG. | (a) MID SPAN |
| | | | | | | | | | | | | | | | | | |
| | | | | | | | | | | | | | | | | | |
| | | | | | | | | | | | | | | | | | |
| | | | | | | | | | | | | | | | | | |

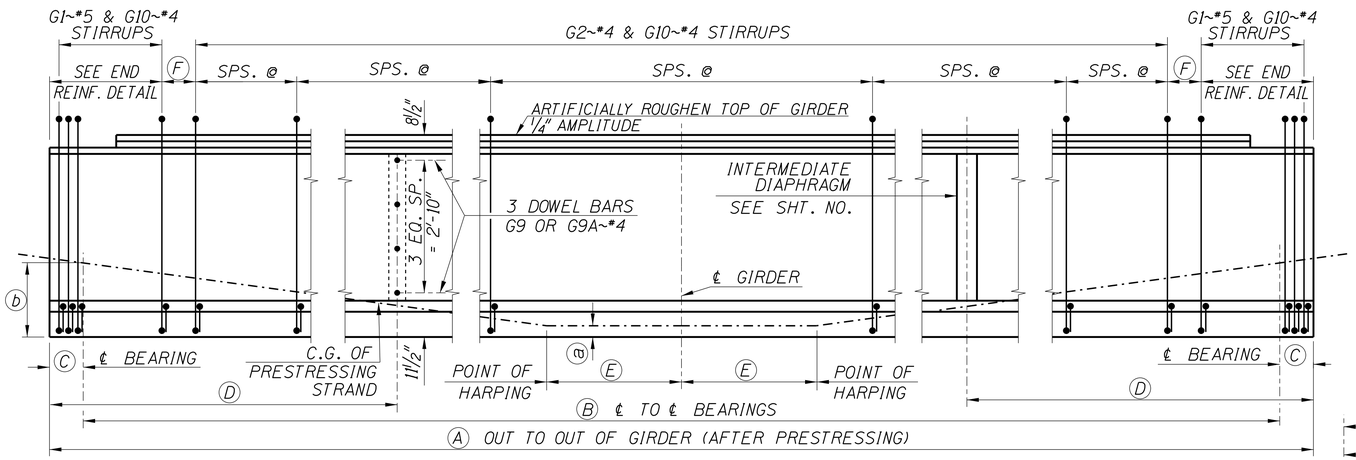


GIRDER ELEVATION AND STIRRUP LAYOUT
NOT TO SCALE

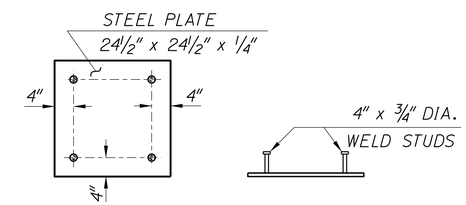


DETAIL A
3/4"=1'-0"

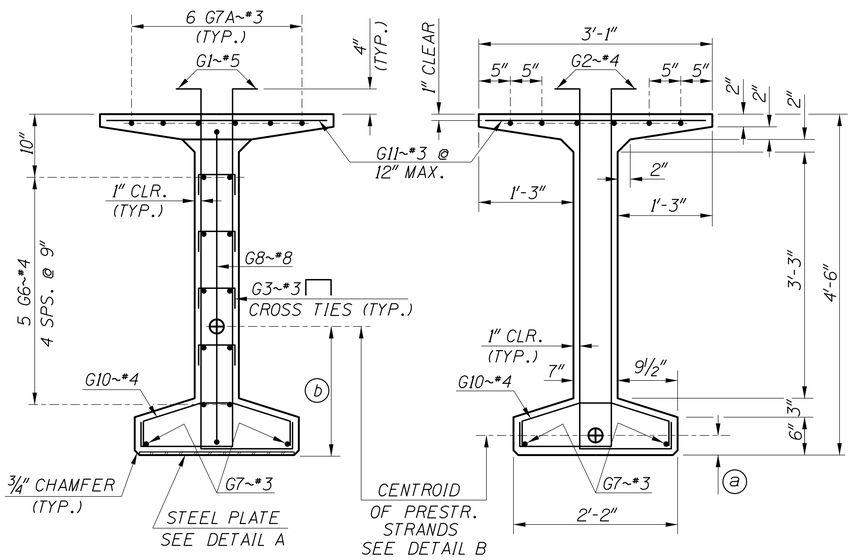


SECTION AT ℄ BEARING
1"=1'-0"

SECTION AT ℄ SPAN
1"=1'-0"

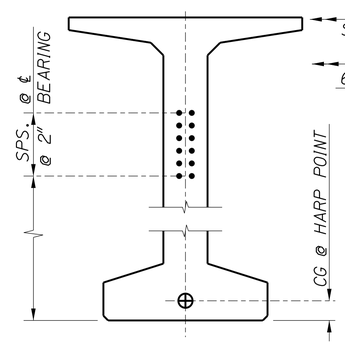


HARP STRAND

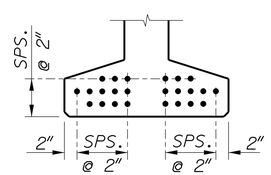


STRAIGHT STRAND

DETAIL B
N.T.S.

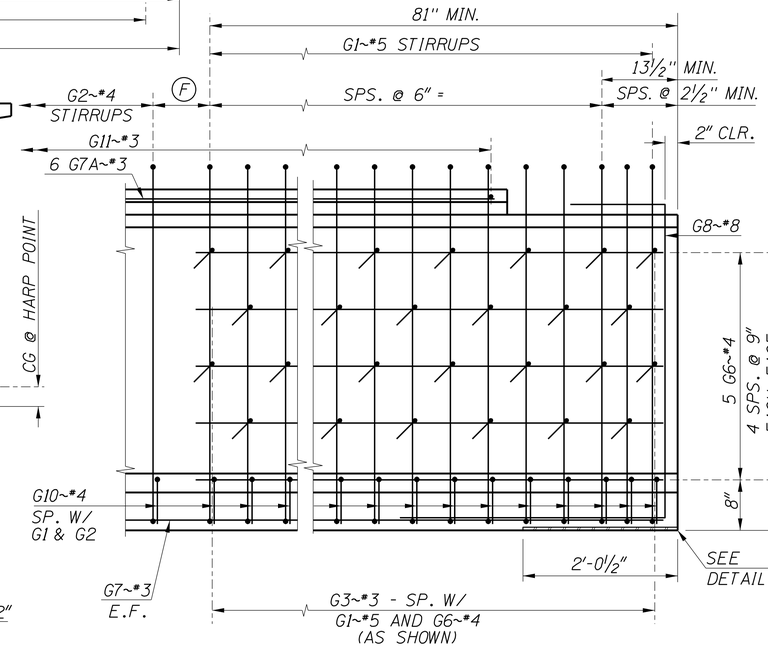


END REINFORCEMENT DETAIL
1"=1'-0"

## REINFORCEMENT DIAGRAM

| MARK | SIZE | GRADE | SKETCH |
|---|---|---|---|
| * G1 | #5 | 60 | 4'-9"; 1'-2 1/2"; 4 1/4" |
| * G2 | #4 | 60 | |
| * G3 | #3 | 60 | 5" |
| G4 | #5 | 60 | 5'-0" |
| G4A | #5 | 60 | 2'-6"; 10" |
| G5 | #6 | 60 | |
| G5A | #6 | 60 | |
| G6 | #4 | 60 | |
| G7 | #3 | 60 | (A) -4" |
| G7A | #3 | 60 | (A) -2 (BLOCKOUT + 2") |
| G8 | #8 | 60 | 4'-2"; 3'-6"; 1'-3" |
| G9 | #4 | 60 | 3'-5" |
| G9A | #4 | 60 | 1'-8 1/2"; 10" |
| * G10 | #4 | 60 | 10"; 5"; 3; 9 1/2; 4 1/2" |
| G11 | #3 | 60 | 2'-11" |

## NOTES

ALL DIMENSIONS TO STIRRUPS AND DOWEL BARS ARE GIVEN AT ℄ OF GIRDER.

SEE PRESTRESSED BULB TEE GIRDER DETAILS SHEET FOR NOTES, DIAPHRAGM DOWEL DETAILS, END DETAILS AND DEFLECTION DATA.

ALL BEND DETAILS TO BE ACCORDING TO LATEST ACI STANDARD PRACTICE.

* STIRRUP AND TIE HOOK BEND DIMENSIONS. STIRRUPS AND TIES SHALL HAVE A MINIMUM 1" COVER OUTSIDE OF BARS.

GIRDER WEIGHT _____ 644 LBS. PER FOOT

| REVISIONS | | | |
|---|---|---|---|
| NO. | DATE | BY | DESCRIPTION |
| △ | | | |
| △ | | | |
| △ | | | |
| △ | | | |
| △ | | | |

DESIGNED
DESIGN CHECKED
DETAILED
DWG. CHECKED
CORRECTIONS

SCALES SHOWN ARE FOR 34" X 22" PRINTS ONLY
CADD FILE NO. \cadds\std_dgns\b05_3e.dgn
DRAWING DATE: MAR 2015

ORIGINAL SIGNED BY:
DATE SIGNED: DATE
ORIGINAL STORED AT ITD BRIDGE SECTION

IDAHO TRANSPORTATION DEPARTMENT

English

PROJECT NO. 0000

54" BULB TEE PRESTRESSED GIRDER

PROJECT
LOCATION
STA

BRIDGE PLANS
BRIDGE LRFD MANUAL, PAGE B5.3E
COUNTY: ABC
KEY NO.: 0000
BRIDGE DRAWING NO.: 00000
SHEET 0 OF 0