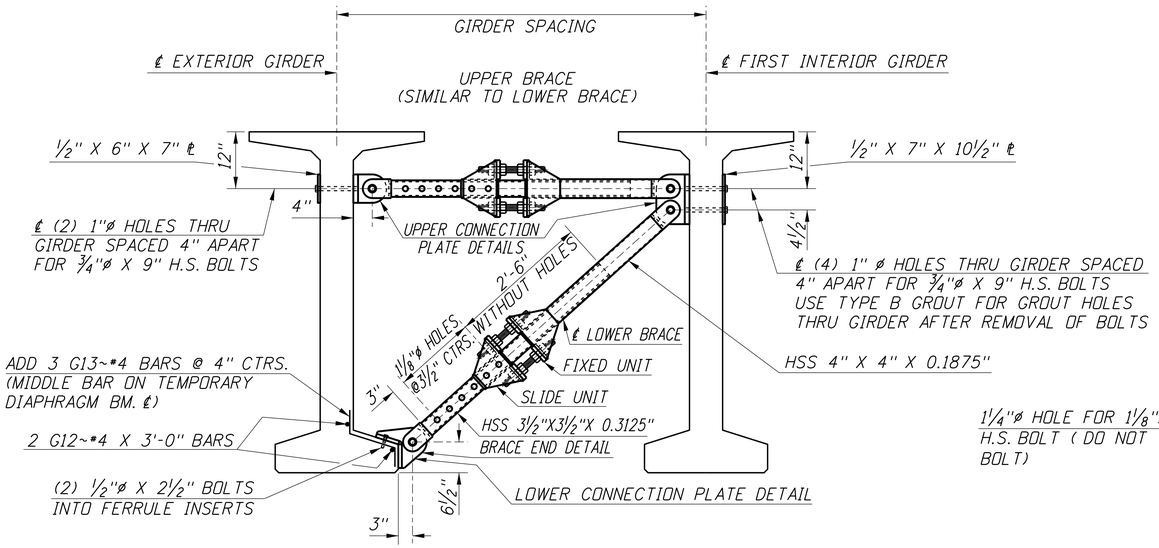

TEMPORARY DIAPHRAGM
3/4"=1'-0"

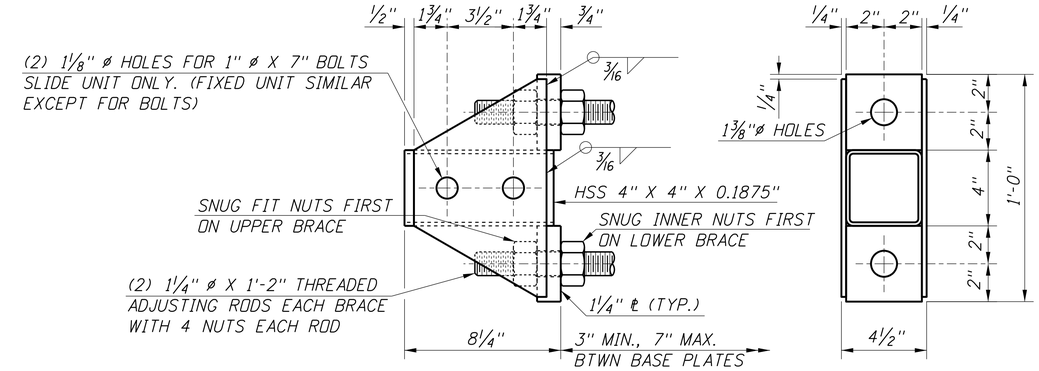

SLIDE UNIT DETAIL
(FIXED UNIT SIMILAR)
3"=1'-0"

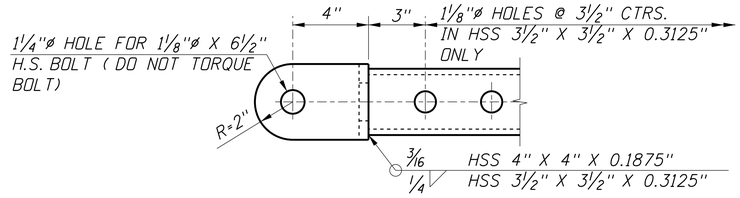

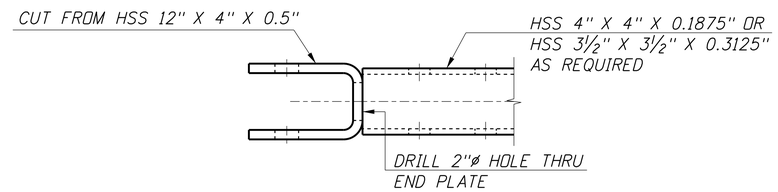

BRACE END DETAIL
3"=1'-0"

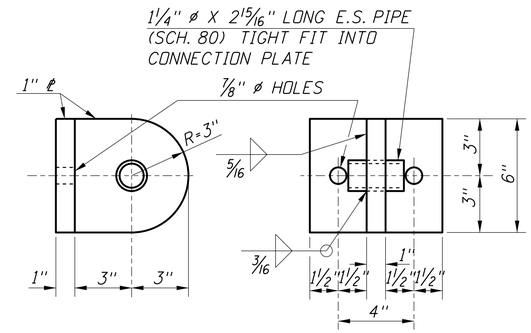

UPPER EXTERIOR CONNECTION PLATE DETAIL
3"=1'-0"

TEMPORARY DIAPHRAGM LAYOUT

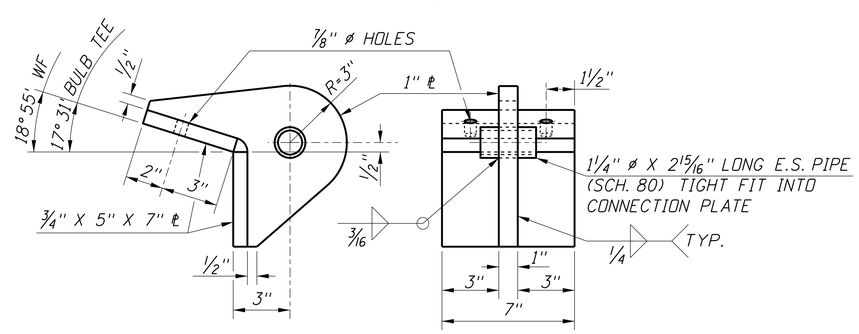

LOWER CONNECTION PLATE DETAIL
3"=1'-0"

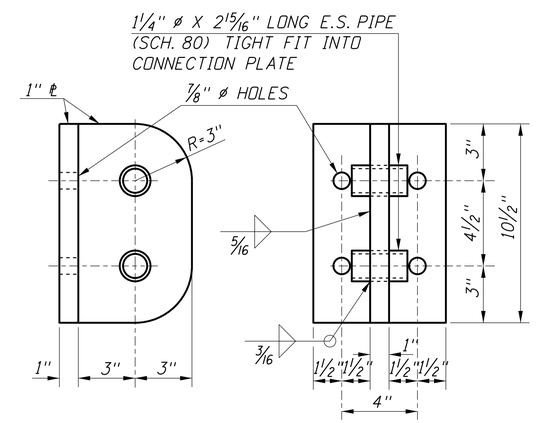

UPPER INTERIOR CONNECTION PLATE DETAIL
3"=1'-0"

TEMPORARY DIAPHRAGM NOTES

1. INSTALL TEMPORARY DIAPHRAGMS BETWEEN END BEAMS AND INTERMEDIATE CONCRETE DIAPHRAGMS BEFORE POURING DIAPHRAGM AND END BEAMS.
2. REMOVE TEMPORARY DIAPHRAGMS AFTER REMOVING DECK OVERHANG BRACKETS.
3. STRUCTURAL TUBES SHALL CONFORM TO ASTM A-501 OR A-500 GRADE B.
4. BOLTS, NUTS, AND WASHERS SHALL CONFORM TO ASTM A-325.
5. PLATES SHALL CONFORM TO ASTM A-36.
6. APPROVED ALTERNATE DESIGNS MAY BE USED FOR TEMPORARY DIAPHRAGMS.
7. TEMPORARY DIAPHRAGMS SHALL BE CONSIDERED INCIDENTAL ITEMS.

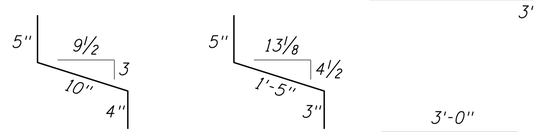

G13~#4
(BULB TEE GIRDER)

G13~#4
(WF GIRDER)

G12~#4

REVISIONS			
NO.	DATE	BY	DESCRIPTION
△			
△			
△			
△			
△			

DESIGNED
DESIGN CHECKED
DETAILED
DWG. CHECKED
CORRECTIONS

SCALES SHOWN ARE FOR 34" X 22" PRINTS ONLY
CADD FILE NO.
\cadds\std_dgns\
b05_3v.dgn
DRAWING DATE:
MAR 2015

ORIGINAL SIGNED BY:
DATE SIGNED: DATE
ORIGINAL STORED AT ITD BRIDGE SECTION

IDAHO TRANSPORTATION DEPARTMENT

English
PROJECT NO.

TEMPORARY DIAPHRAGM DETAILS

BRIDGE PLANS
BRIDGE LRFD MANUAL, PAGE B5.3P
COUNTY
KEY NO.
BRIDGE DRAWING NO.
SHEET
OF