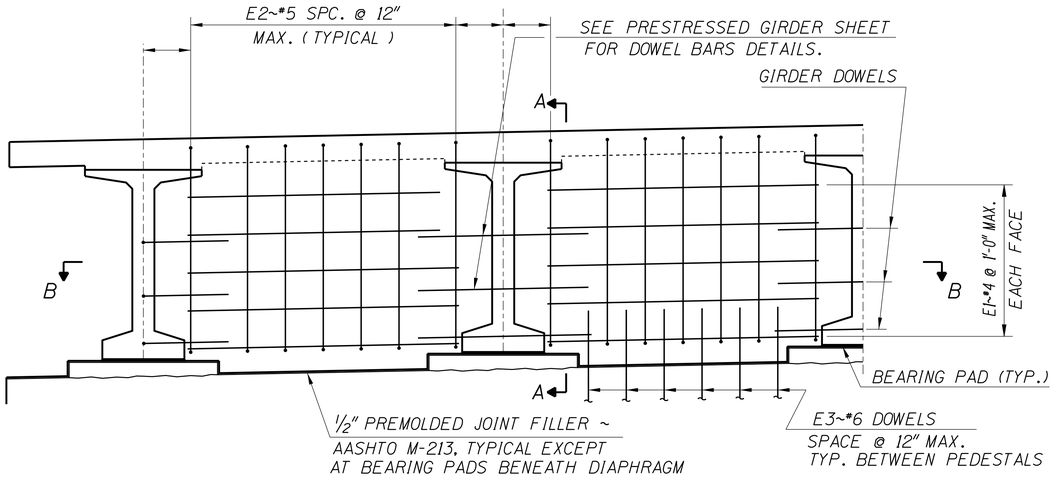

PIER DIAPHRAGM ELEVATION
1/2"=1'-0"

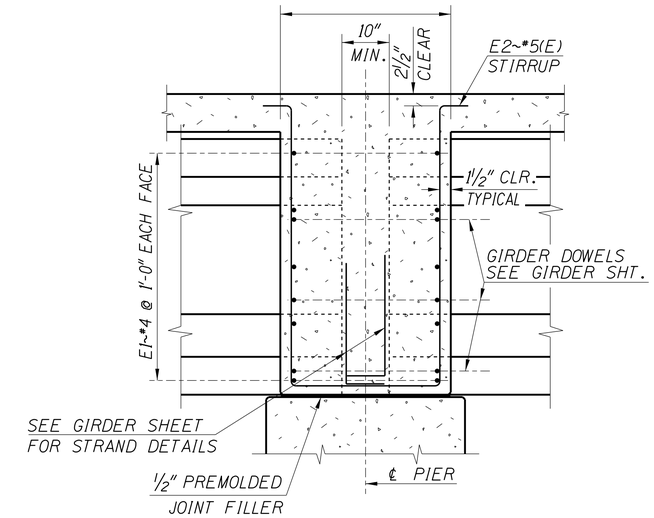

SECTION A-A (THRU PIER DIAPHRAGM)
3/4"=1'-0"

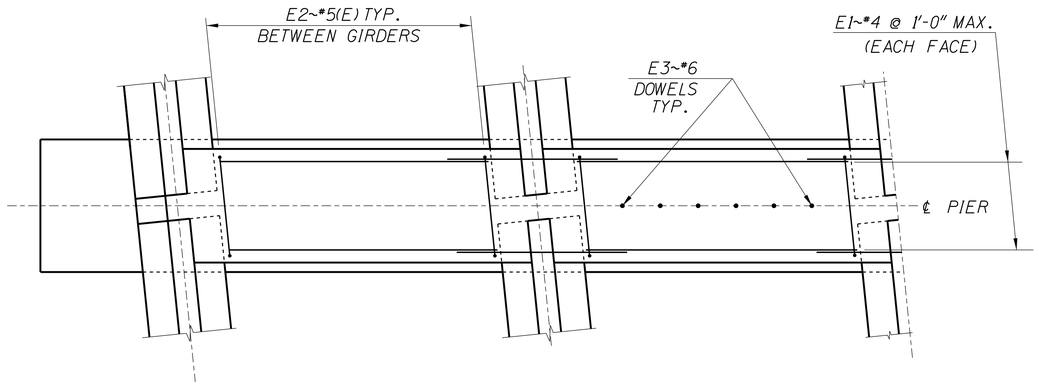

SECTION B-B (THRU PIER DIAPHRAGM PLAN)
1/2" = 1'-0"

NOTE:
NO HORIZONTAL CONSTRUCTION JOINTS ALLOWED BETWEEN TOP SLAB AND PIER DIAPHRAGM.

REVISIONS			
NO.	DATE	BY	DESCRIPTION
△			
△			
△			
△			
△			

DESIGNED
DESIGN CHECKED
DETAILED
DWG. CHECKED
CORRECTIONS

SCALES SHOWN ARE FOR 34" X 22" PRINTS ONLY
CADD FILE NO.
\cadds\std_dgns\
b05_3q.dgn
DRAWING DATE:
MAR 2015

ORIGINAL SIGNED BY:
DATE SIGNED: DATE
~~DATE~~ ~~FINAL STORED AT ITD BRIDGE SECTION~~

IDAHO TRANSPORTATION DEPARTMENT

English
PROJECT NO.

PIER DIAPHRAGM

BRIDGE PLANS
BRIDGE LRFD MANUAL, PAGE B5.3Q
COUNTY
KEY NO.
BRIDGE DRAWING NO.
SHEET
OF