## PRESTRESSED GIRDER SCHEDULE

| GIRDERS | | PRESTRESS FORCE ~ KIPS | | CONCRETE STRENGTH ~ PSI | | GIRDER DIMENSIONS | | | | | | | | END DETAIL | | SKEW | C.G. OF STRAND | |
|---|---|---|---|---|---|---|---|---|---|---|---|---|---|---|---|---|---|---|
| NO. | LOCATION | FINAL AFTER LOSSES | INITIAL BEFORE LOSSES | AT RELEASE f'ci | AT 28 DAYS f'c | Ⓐ | Ⓑ | Ⓒ LEFT | Ⓒ RIGHT | Ⓓ LEFT | Ⓓ RIGHT | Ⓔ | Ⓕ | LEFT | RIGHT | ⓐ | ⓑ ℄ BRG. | ⓐ MID SPAN |
| | | | | | | | | | | | | | | | | | | |
| | | | | | | | | | | | | | | | | | | |
| | | | | | | | | | | | | | | | | | | |
| | | | | | | | | | | | | | | | | | | |

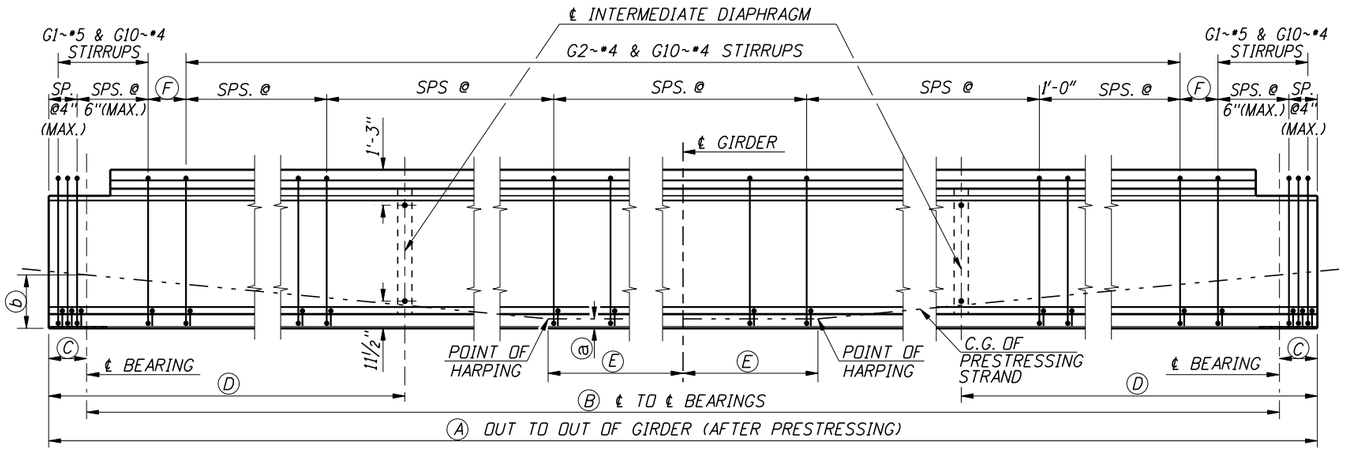


GIRDER ELEVATION AND STIRRUP LAYOUT
⅜"=1'-0"

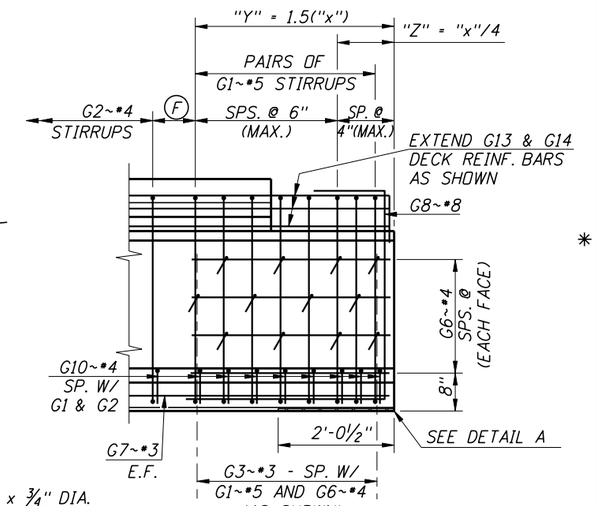


END REINFORCEMENT DETAIL
¾"=1'-0"

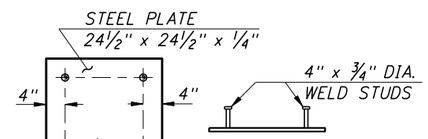


DETAIL A
¾"=1'-0"

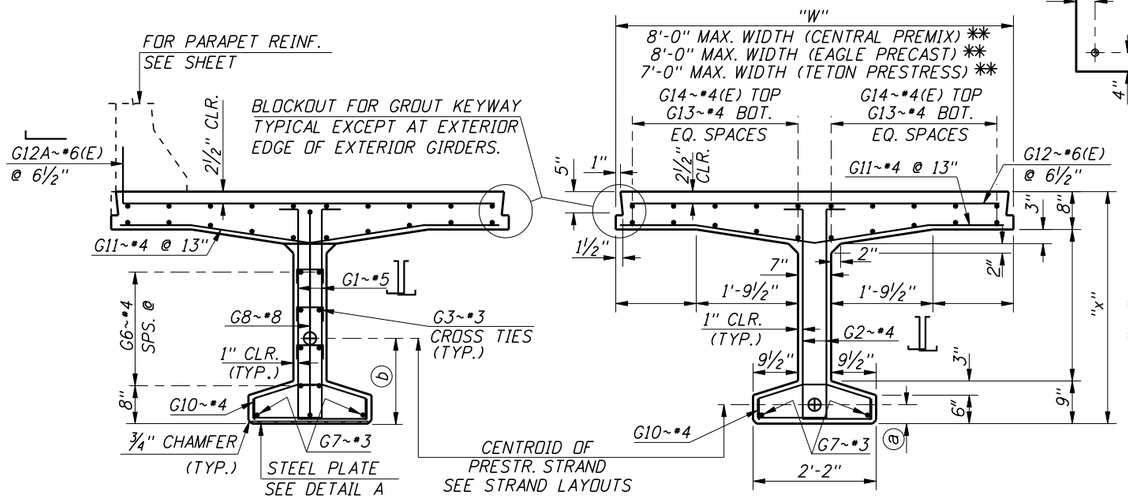


SECTION AT ℄ BEARING
¾"=1'-0"

SECTION AT ℄ SPAN
¾"=1'-0"

** EXACT WIDTH WILL BE SLIGHTLY LESS THAN NOMINAL WIDTH DUE TO GAP BETWEEN TOP FLANGES.

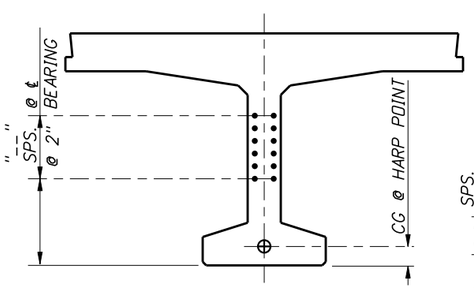


HARP STRAND

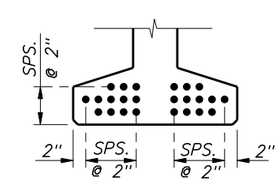


STRAIGHT STRAND

STRAND LAYOUT
N.T.S.

## REINFORCEMENT DIAGRAM

| | MARK | SIZE | GRADE | SKETCH |
|---|---|---|---|---|
| * | G1 | #5 | 60 | "x" - 6"; 1'-2½"; 4¼" |
| * | G2 | #4 | 60 | |
| * | G3 | #3 | 60 | 5" |
| | G5 | #6 | 60 | INT GIRDER |
| | G5A | #6 | 60 | EXT GIRDER |
| | G6 | #4 | 60 | "Y" |
| | G7 | #3 | 60 | Ⓐ - 4" (MINIMUM LAP LENGTH=1'-4") |
| * | G8 | #8 | 60 | "x" - 6"; 3'-6"; 1'-3" |
| | G9 | #4 | 60 | |
| | G9A | #4 | 60 | |
| | G10 | #4 | 60 | 10"; 5"; 4½"; 3; 9½ |
| | G11 | #4 | 60 | 3¾"; 2'-0"; 2'-0" |
| | G12 | #6(E) | 60 | "W" - 6" |
| *** | G12A | #6(E) | 60 | "W" - 6" |
| | G13 | #4 | 60 | Ⓐ - 4" (MINIMUM LAP LENGTH=1'-8") |
| | G14 | #4(E) | 60 | Ⓐ - 4"; 10"; 10" (MINIMUM LAP LENGTH=2'-2") |

### NOTES

ALL DIMENSIONS TO STIRRUPS AND DOWEL BARS ARE GIVEN AT ℄ OF GIRDER.

ALL BEND DETAILS TO BE ACCORDING TO LATEST ACI STANDARD PRACTICE.

* STIRRUP AND TIE HOOK BEND DIMENSIONS. STIRRUPS AND TIES SHALL HAVE A MINIMUM 1" COVER OUTSIDE OF BARS.

SEE SHEET XX FOR ADDITIONAL GIRDER NOTES AND DETAILS.

*** FOR JOINTS OR DISCONTINUITIES IN THE PARAPET, BUNDLE A #4(E) WITH THE G12A BARS FOR A DISTANCE EQUAL TO 8' FROM THE JOINT/DISCONTINUITY.

GIRDER WEIGHT _____ LBS. PER FOOT

| REVISIONS | | | |
|---|---|---|---|
| NO. | DATE | BY | DESCRIPTION |
| △ | | | |
| △ | | | |
| △ | | | |
| △ | | | |
| △ | | | |

DESIGNED
DESIGN CHECKED
DETAILED
DWG. CHECKED
CORRECTIONS

SCALES SHOWN ARE FOR 34" X 22" PRINTS ONLY
CADD FILE NO. \cadds\std_dgn\b05_4b.dgn
DRAWING DATE: JULY 2010

ORIGINAL SIGNED BY:
DATE SIGNED: DATE
ORIGINAL STORED AT ITD BRIDGE SECTION

IDAHO TRANSPORTATION DEPARTMENT

English
PROJECT NO.

PRESTRESSED DECK BULB TEE GIRDER

BRIDGE PLANS
BRIDGE LRFD MANUAL, PAGE B5.4B
COUNTY | KEY NO.
BRIDGE DRAWING NO. | SHEET OF