PRESTRESSED GIRDER SCHEDULE

GIRDERS		PRESTRESS FORCE ~ KIPS		CONCRETE STRENGTH ~ PSI		GIRDERS DIMENSIONS						C.G. OF STRAND
NO.	LOCATION	FINAL AFTER LOSSES	INITIAL BEFORE LOSSES	AT RELEASE f'ci	AT 28 DAYS f'c	(A)	(B)	(C) LEFT	(C) RIGHT	(D) LEFT	(D) RIGHT	(b)

ALL BEND DETAILS TO BE ACCORDING TO LATEST ACI STANDARD PRACTICE.

✳ STIRRUP AND TIE HOOK BEND DIMENSIONS.

APPROXIMATE GIRDER SHIPPING WEIGHT IS 673 LBS. PER LINEAL FOOT.

ALL REBAR SHALL BE EPOXY COATED.

REINFORCEMENT DIAGRAM

	MARK	SIZE	GRADE	SKETCH
✳	G1A	#4	60	11½" 3'-5" 11½"
✳	G1B	#4	60	11½" 3'-5" 11½"
	G2	#4	60	(A) - 4"
✳	G3	#4	60	10½" 2'-0"
✳	G4	#4	60	2'-0" 3'-4" 2'-0"
	G5	#4	60	2'-0" 2½" RAD. 6"

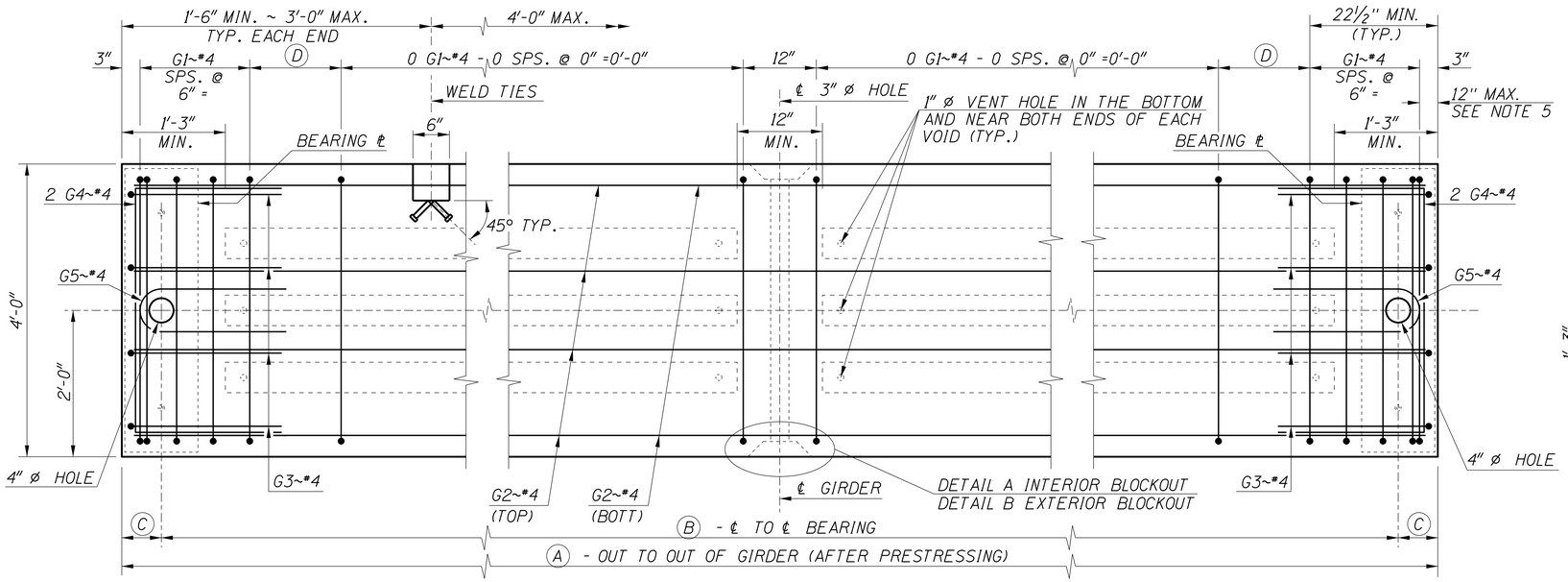

PLAN
1"=1'-0"

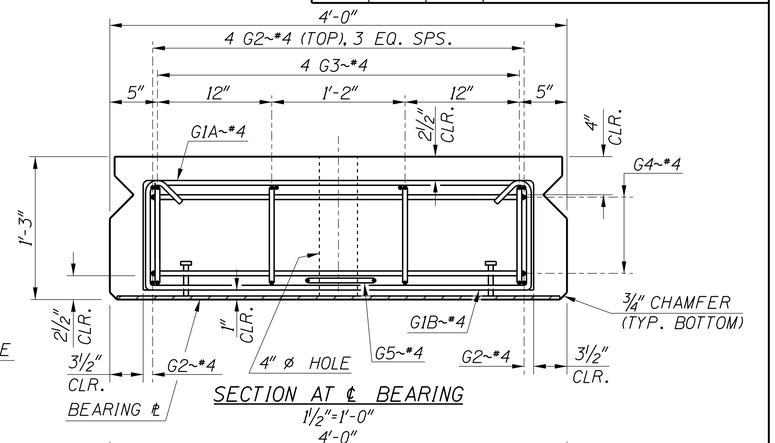

SECTION AT ℄ BEARING
1½"=1'-0"

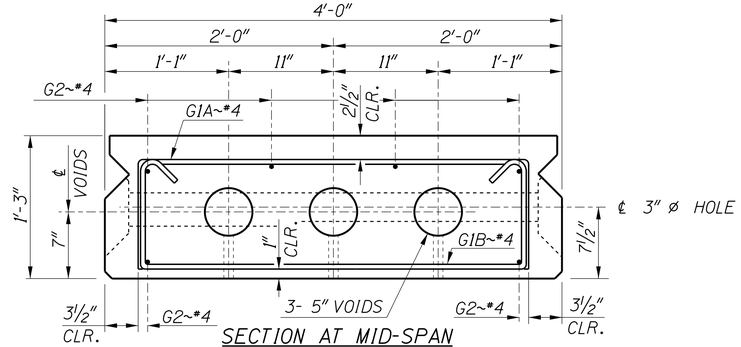

SECTION AT MID-SPAN
1½"=1'-0"

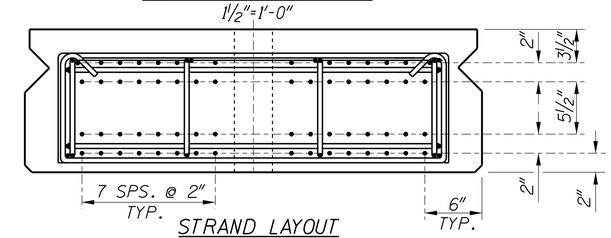

STRAND LAYOUT
1½"=1'-0"

NOTE:
1. ALL DIMENSIONS TO STIRRUPS AND DOWELS ARE GIVEN AT ℄ GIRDER.
2. FOR NOTES, BLOCKOUT, BEARING PLATE AND MISCELLANEOUS DETAILS,
3. SEE PRESTRESSED SLAB DETAILS, SHEET NO. 00.
4. FOR TIE ROD LAYOUT, SEE FRAMING PLAN, SHEET NO. 00.
5. REINFORCEMENT IN ACCORDANCE WITH AASHTO ARTICLE 5.10.10.1.

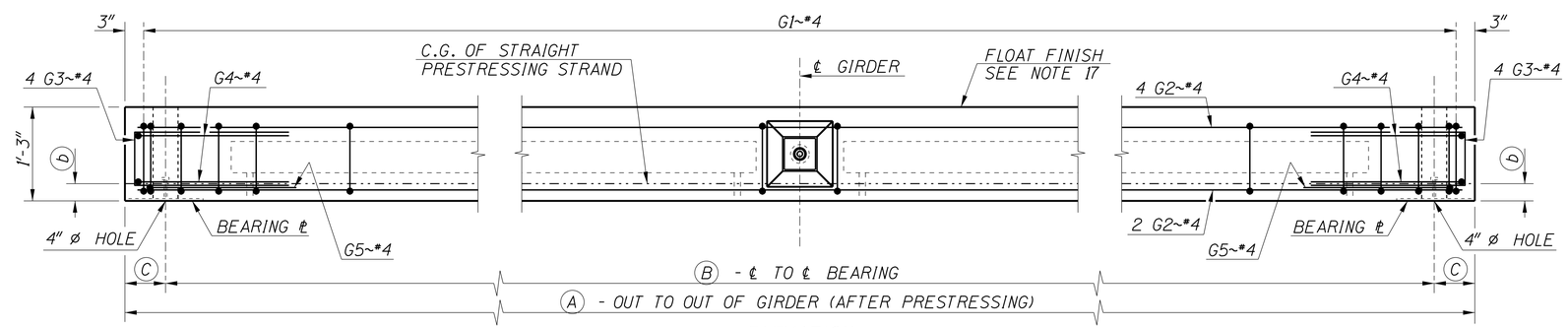

ELEVATION
1"=1'-0"

REVISIONS			
NO.	DATE	BY	DESCRIPTION
△			
△			
△			
△			
△			

DESIGNED
DESIGN CHECKED
DETAILED
DWG. CHECKED
CORRECTIONS

SCALES SHOWN ARE FOR 34" X 22" PRINTS ONLY
CADD FILE NO. \cadds\std_dgns\b05_5b.dgn
DRAWING DATE: JUNE 2013
DATE:

IDAHO TRANSPORTATION DEPARTMENT

English
PROJECT NO.

1'-3" PRESTRESSED VOIDED SLAB

BRIDGE PLANS
BRIDGE LRFD MANUAL, PAGE B5.5B
COUNTY | KEY NO.
BRIDGE DRAWING NO. | SHEET OF