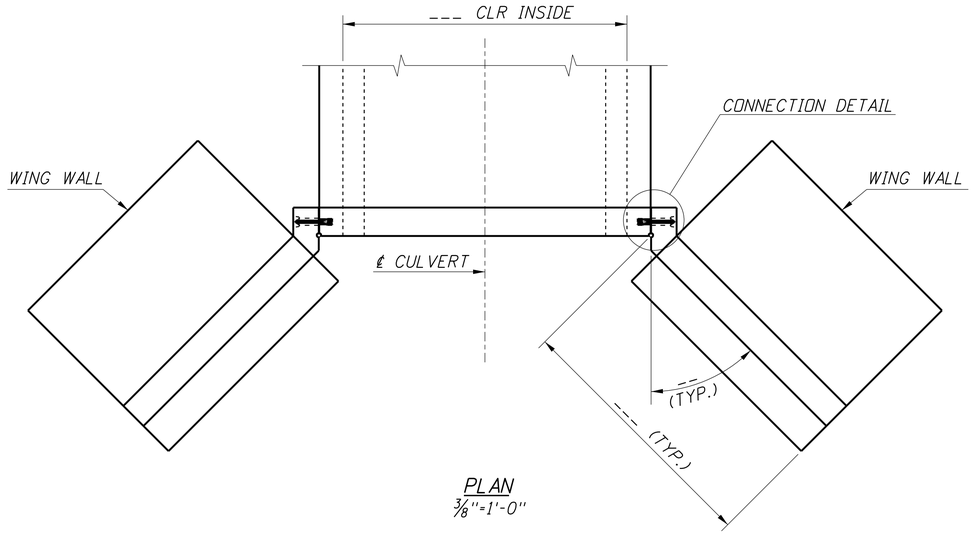

PLAN
3/8"=1'-0"

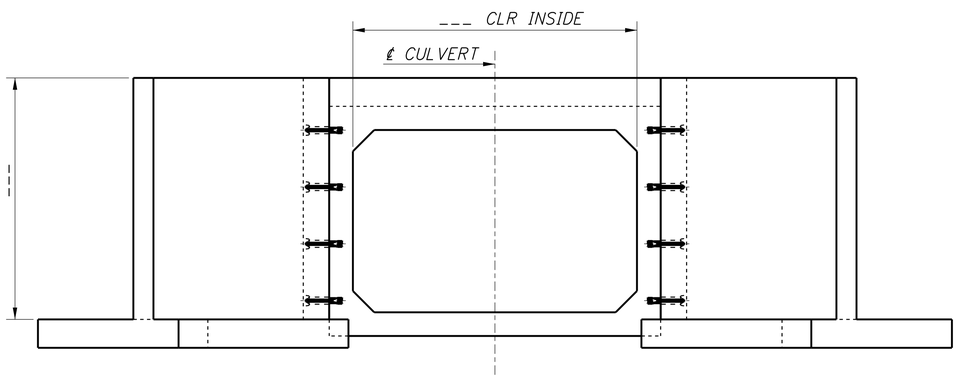

ELEVATION
3/8"=1'-0"

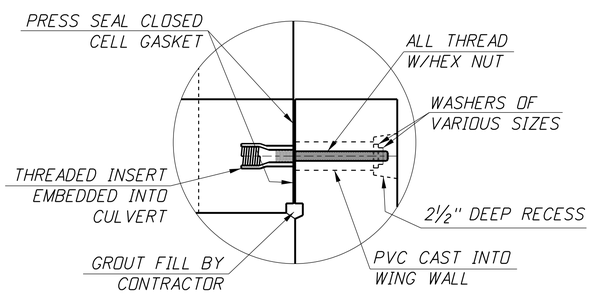

CONNECTION DETAIL
1½"=1'-0"

PRECAST WING WALL

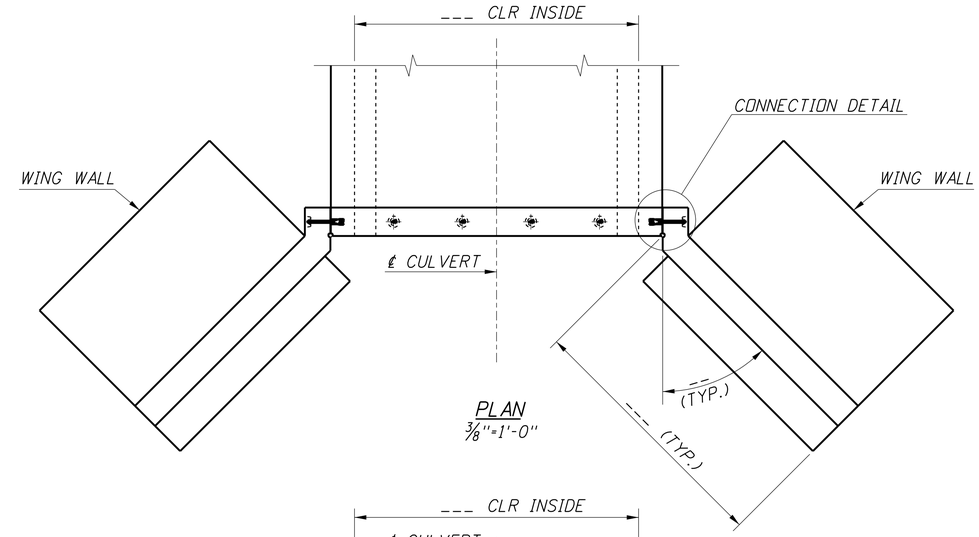

PLAN
3/8"=1'-0"

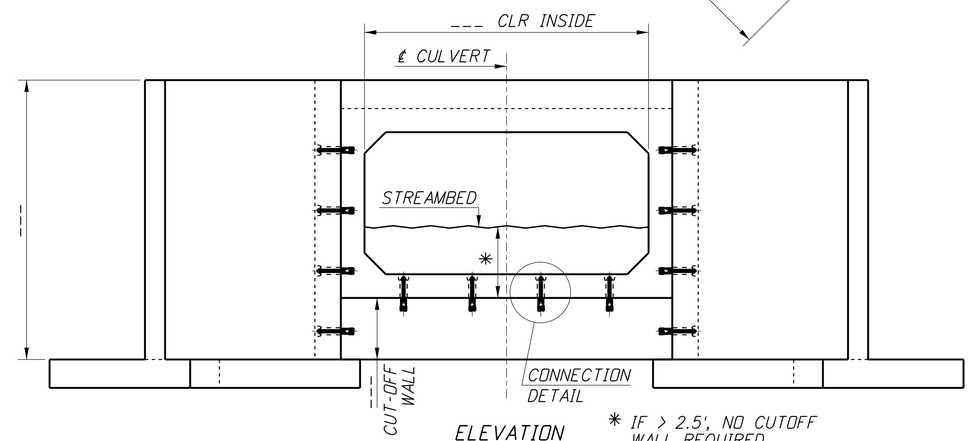

ELEVATION
3/8"=1'-0"

* IF > 2.5', NO CUTOFF WALL REQUIRED.

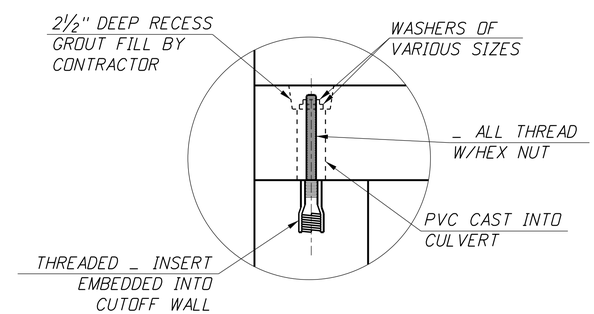

CONNECTION DETAIL
1½"=1'-0"

PRECAST CUT-OFF WALL

REVISIONS			
NO.	DATE	BY	DESCRIPTION
△			
△			
△			
△			
△			

DESIGNED
DESIGN CHECKED
DETAILED
DWG. CHECKED
CORRECTIONS

SCALES SHOWN ARE FOR 34" X 22" PRINTS ONLY

CADD FILE NO.
\cadds\std_dgns\
b12_4.dgn

DRAWING DATE:
MAR 2015

ORIGINAL SIGNED BY:

DATE SIGNED: DATE

ORIGINAL STORED AT ITD BRIDGE SECTION

IDAHO TRANSPORTATION DEPARTMENT

English

PROJECT NO.
_____

MISCELLANEOUS PRECAST CULVERT DETAILS

_____
_____
_____

BRIDGE PLANS

BRIDGE LRFD MANUAL, PAGE B12.4

COUNTY	KEY NO.
_____	_____
BRIDGE DRAWING NO.	SHEET
_____	__ OF __