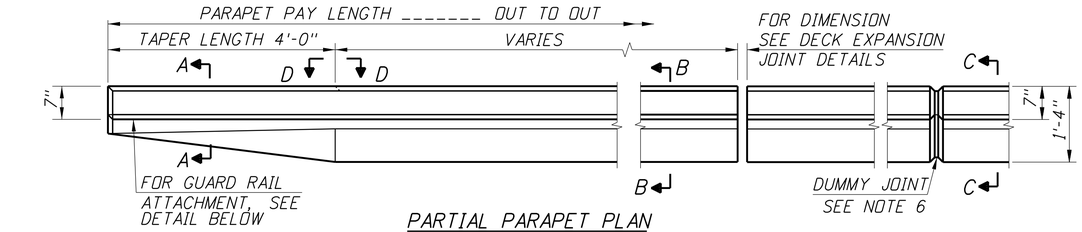

PARTIAL PARAPET PLAN
3/4"=1'-0"

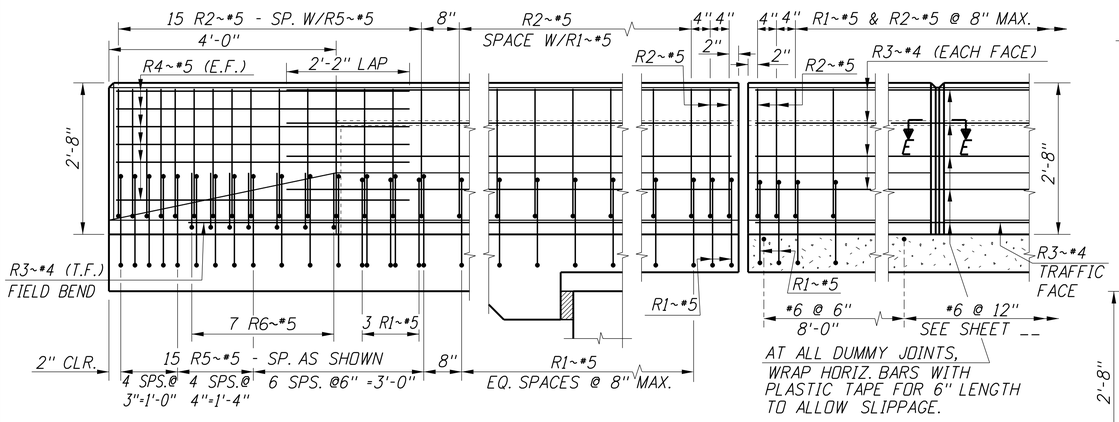

PARTIAL PARAPET ELEVATION
3/4"=1'-0"

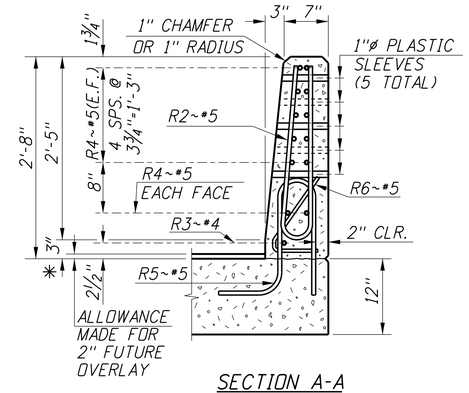

SECTION A-A
1"=1'-0"

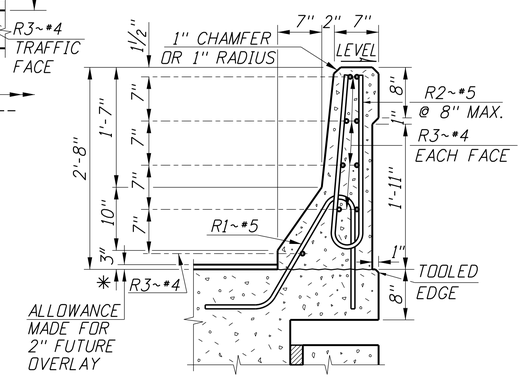

SECTION B-B
1"=1'-0"

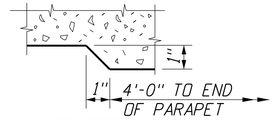

SECTION F-F
NO SCALE

NOTES

1. CONCRETE PARAPET SHALL BE CONCRETE CLASS 40AF.
2. PARAPET SHALL BE CONSTRUCTED SO THAT THE OUTSIDE FACE IS PERPENDICULAR TO THE ROADWAY SLOPE. HEIGHT CONTROL SHALL BE AT THE INSIDE (TRAFFIC) FACE.
3. PARAPET SHALL BE CAST-IN-PLACE; SLIP FORMING WILL NOT BE ALLOWED.
4. WHEN A DECK OVERLAY IS SPECIFIED, PARAPET CONSTRUCTION SHALL BE COMPLETED PRIOR TO PLACING THE DECK OVERLAY.
5. REINFORCEMENT BARS R5~#5 & R1~#5 SHALL BE IN PLACE BEFORE ABUTMENT, APPROACH SLAB, OR DECK SLAB CONCRETE IS PLACED.
6. INTERMEDIATE PARAPET DUMMY JOINTS SHALL BE SPACED UNIFORMLY THROUGHOUT THE LENGTH OF THE BRIDGE. A DUMMY JOINT SHALL BE LOCATED AT EVERY PIER WHERE THE DECK SLAB IS CONTINUOUS. INTERMEDIATE PARAPET JOINT SPACING SHALL NOT BE LESS THAN 6' NOR GREATER THAN 12'.
7. THREADED INSERTS SHALL BE KOHLER, STAR-HOLSIN, RICHMOND ROCKET OR APPROVED EQUAL. INSTALL AS INDICATED ON DETAIL DRAWINGS OR AS DIRECTED BY THE ENGINEER.
8. SEE ROADWAY PLANS FOR LOCATION OF DELINEATORS, IF REQUIRED.
9. THE FOLLOWING ITEMS SHALL BE INCLUDED IN THE BID ITEM "CONCRETE PARAPET":
   1. CONCRETE AND ALL REINFORCING STEEL SHOWN ON THIS SHEET.
   2. ALL PARAPET REINFORCEMENT SHALL BE EPOXY COATED IN ACCORDANCE WITH SUBSECTION 708.02.
10. PARAPETS SHALL BE PLACED AFTER FALSEWORK OR OVERHANG DECK FORMS HAVE BEEN RELEASED AND AS LONG AFTER SUPERSTRUCTURE CONSTRUCTION AS THE PROGRESS OF THE WORK WILL PERMIT.
11. HEIGHT OF PARAPET SHALL BE ADJUSTED TO COMPENSATE FOR THE CAMBER AND LOAD DEFLECTION OF THE SUPERSTRUCTURE. THE AMOUNT OF ADJUSTMENT WILL BE DETERMINED BY THE CONTRACTOR AND APPROVED BY THE ENGINEER.
12. END FACE, EXPANSION JOINTS AND DUMMY JOINTS SHALL BE CONSTRUCTED PERPENDICULAR TO THE ROADWAY GRADE.
13. PARAPET PLACEMENT SHALL FOLLOW THE SAME SEQUENCE AS THE DECK PLACEMENT.
14. THE CONCRETE SURFACE OF THE PARAPET SHALL BE WATER CURED IN ACCORDANCE WITH SUBSECTION 502.03.

* ADJUST CONCRETE AND REINFORCEMENT QUANTITIES IF A WEARING SURFACE IS APPLIED DURING INITIAL BRIDGE CONSTRUCTION AND INCREASE HEIGHT OF 3" LIP OF PARAPET TO MATCH WEARING SURFACE THICKNESS.

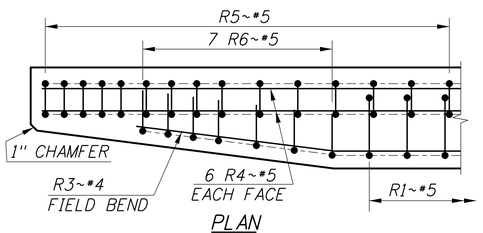

PLAN
NO SCALE

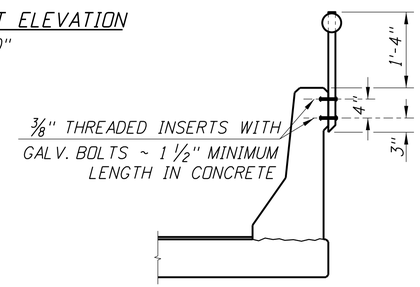

DELINEATOR ATTACHMENT
SEE STANDARD DRAWING G-3
3/4"=1'-0"

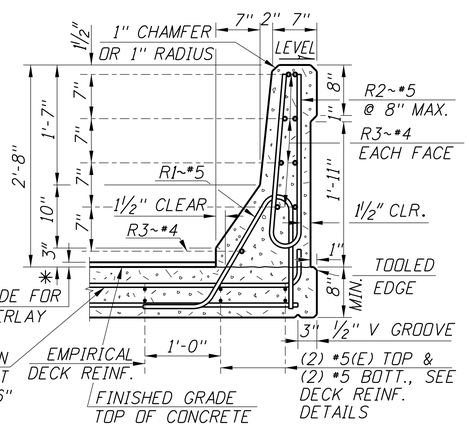

SECTION C-C
1"=1'-0"

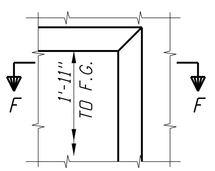

ELEVATION D-D
NO SCALE

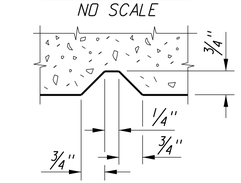

SECTION E-E
DUMMY JOINT
NO SCALE
(TYP. FOR BOTH SIDES & TOP OF PARAPET)

APPROXIMATE PARAPET QUANTITIES

CONCRETE: _____ 2.07 CF/LF
REINFORCEMENT: _____ 27.5 LB/LF

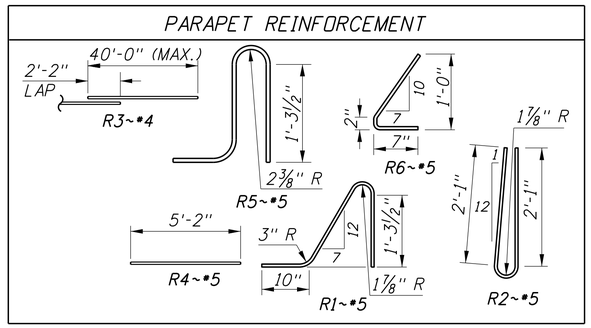

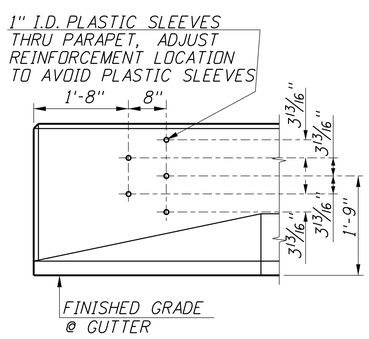

GUARDRAIL ATTACHMENT
3/4"=1'-0"

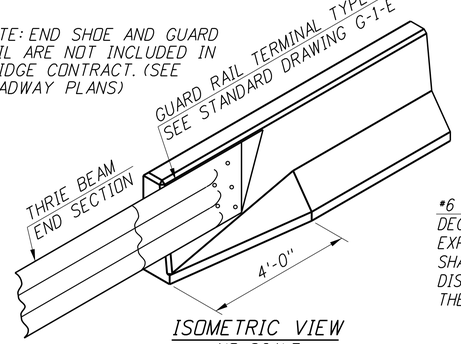

ISOMETRIC VIEW
NO SCALE

REVISIONS			
NO.	DATE	BY	DESCRIPTION
△			
△			
△			
△			
△			

DESIGNED
DESIGN CHECKED
DETAILED
DWG. CHECKED
CORRECTIONS

SCALES SHOWN ARE FOR 34" X 22" PRINTS ONLY
CADD FILE NO. \cadds\std_dgns\ bi3_1c.dgn
DRAWING DATE: MAR 2015

ORIGINAL SIGNED BY:
DATE SIGNED: DATE
DATE FINAL STORED AT ITD BRIDGE SECTION

IDAHO TRANSPORTATION DEPARTMENT

English
PROJECT NO.

CONCRETE PARAPET WITH THRIE BEAM RAIL
WITH APPROACH SLAB

BRIDGE PLANS
BRIDGE LRFD MANUAL, PAGE B13.1C
COUNTY | KEY NO.
BRIDGE DRAWING NO. | SHEET OF