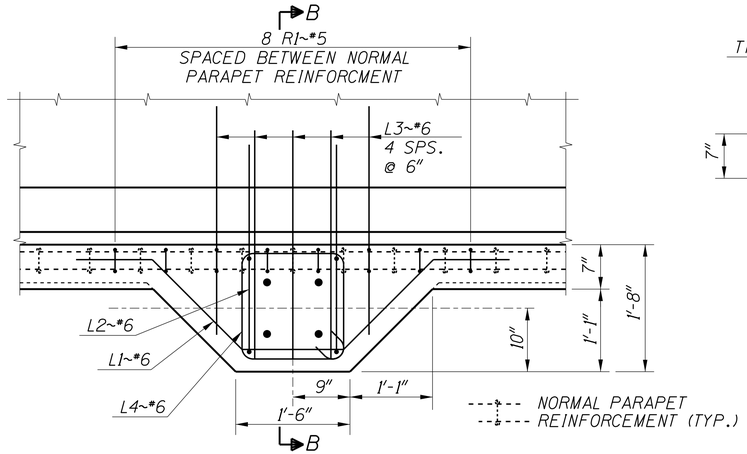

PLAN
1"=1'-0"

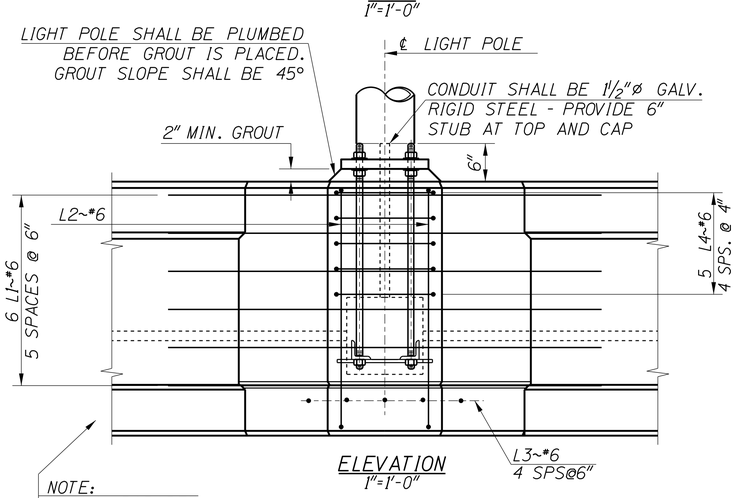

ELEVATION
1"=1'-0"

NOTE:
NORMAL PARAPET
REINFORCMENT NOT
SHOWN FOR CLARITY.

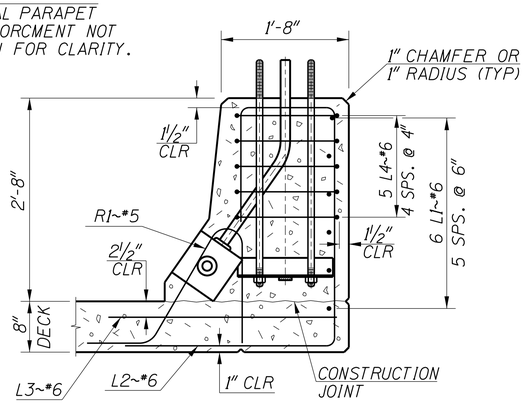

SECTION B-B
1"=1'-0"

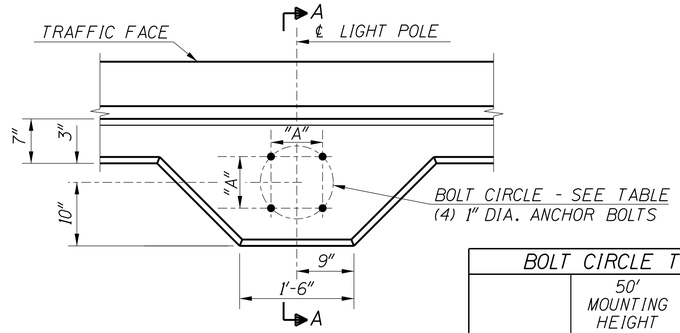

BOLT CIRCLE PLAN
1"=1'-0"

BOLT CIRCLE TABLE		
	50' MOUNTING HEIGHT	40' MOUNTING HEIGHT
DIAMETER	16"	11½"
"A"	11¼"	8⅛"
"B"	5⅝"	4 1/16"

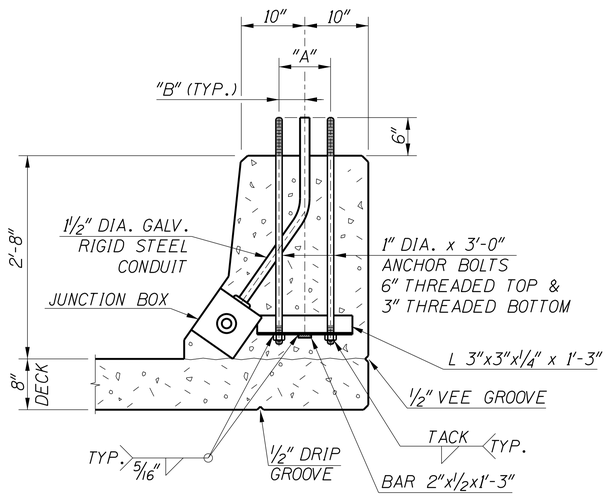

SECTION A-A
ANCHOR BOLT DETAILS
1"=1'-0"

NOTES

1. CONCRETE SHALL BE CLASS 40AF.
2. ANCHOR BOLTS, NUTS, AND WASHERS SHALL CONFORM TO ASTM F-1554, GRADE 55 AND ARE TO BE GALVANIZED IN ACCORDANCE WITH ASTM A-153 UNLESS NOTED OTHERWISE. EACH ANCHOR BOLT SHALL BE FURNISHED WITH 2 NUTS AND 2 WASHERS AT LIGHT POLE BASE PLATE AND 1 NUT AT EMBEDDED END.
3. ANGLES AND PLATES SHALL BE AASHTO M-270, GRADE 36.
4. ALL REINFORCEMENT SHALL BE EPOXY COATED IN ACCORDANCE WITH SUBSECTION 708.02.
5. GROUT SHALL CONFORM TO TYPE B CLASS 1 AS SPECIFIED IN SUBSECTION 506.03 PARAGRAPH H.
6. SEE CONCRETE PARAPET DRAWING FOR NORMAL PARAPET REINFORCEMENT.
7. THE LOCATION OF LIGHT POLE SUPPORTS MAY BE FIELD ADJUSTED ±3 FEET TO AVOID CONFLICT.
8. SEE ROADWAY PLANS FOR LIGHT POLE DETAILS. FURNISHING AND INSTALLING LIGHT POLES AND ALL ELECTRICAL ITEMS IS A ROADWAY PAY ITEM.
9. CONCRETE, REINFORCING STEEL, ANCHOR BOLT ASSEMBLIES, AND GROUT FOR LIGHT POLE SUPPORTS SHALL BE INCIDENTAL TO BID ITEM "CONCRETE PARAPET".
10. MAXIMUM MOUNTING HEIGHT IS 50 FEET. MAXIMUM ARM LENGTH IS 15 FEET.

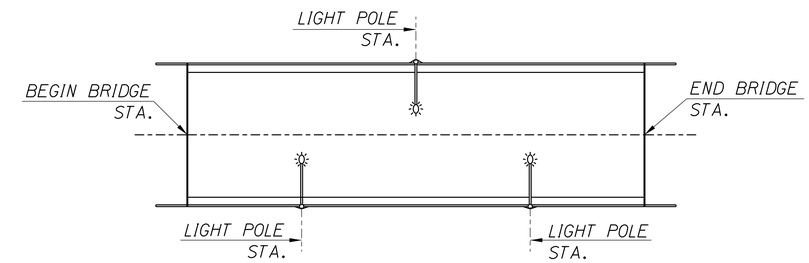

LIGHT POLE LAYOUT
N.T.S.

LIGHT POLE SUPPORT REINFORCEMENT

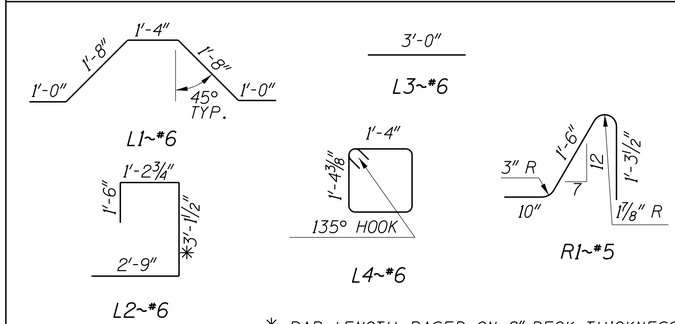

* BAR LENGTH BASED ON 8" DECK THICKNESS.

REVISIONS			
NO.	DATE	BY	DESCRIPTION
△			
△			
△			
△			
△			

DESIGNED
DESIGN CHECKED
DETAILED
DWG. CHECKED
CORRECTIONS

SCALES SHOWN ARE FOR 34" X 22" PRINTS ONLY
CADD FILE NO.
\cadds\std_dgns\
b13_1e.dgn
DRAWING DATE:
JUNE 2013

DATE:

IDAHO TRANSPORTATION DEPARTMENT

English

PROJECT NO.

CONCRETE PARAPET LIGHT POLE SUPPORT

BRIDGE PLANS
BRIDGE LRFD MANUAL, PAGE B13.1E
COUNTY
KEY NO.
BRIDGE DRAWING NO.
SHEET
OF