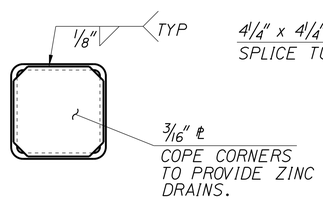

RAIL CAP DETAILS
3"=1'-0"

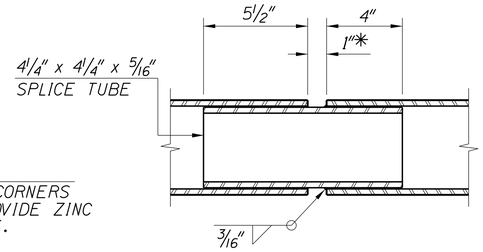

* RAIL SPLICE SHALL BE PROVIDED IN PANEL THAT HAS DECK EXPANSION JOINT. ADJUST DIMENSION FOR EXPANSION JOINT.

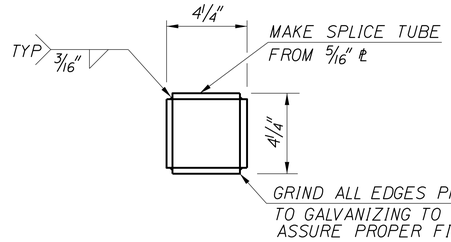

RAIL SPLICE DETAILS
3"=1'-0"

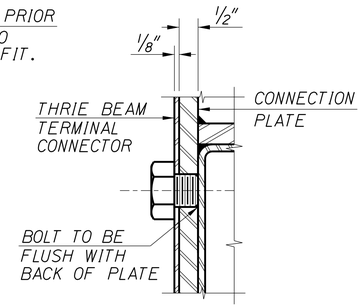

DETAIL "B"
HALF SCALE

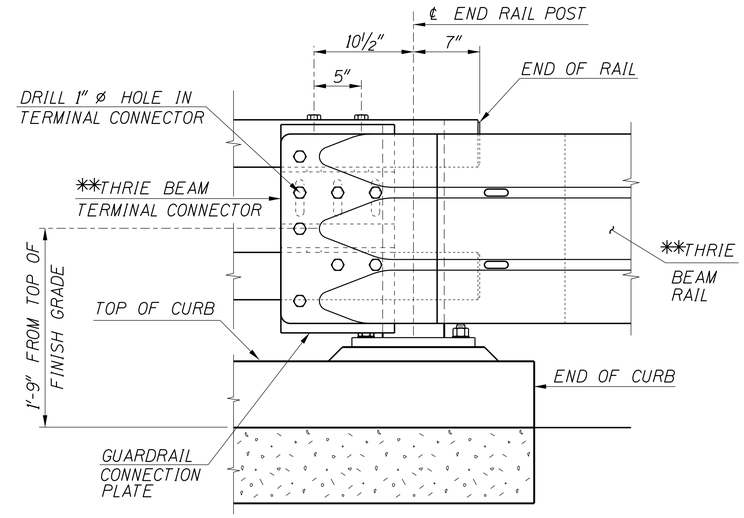

**FOR DETAILS, SEE ROADWAY PLANS G-1-E

TERMINAL CONNECTOR
1 1/2"=1'-0"

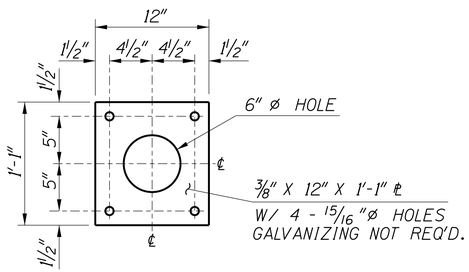

ANCHOR PLATE DETAILS
1 1/2"=1'-0"

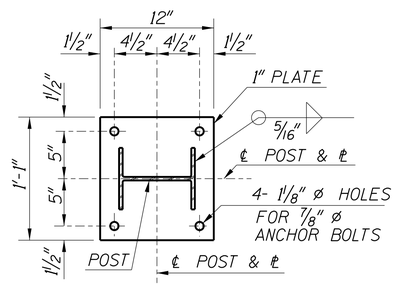

BASE PLATE DETAILS
1 1/2"=1'-0"

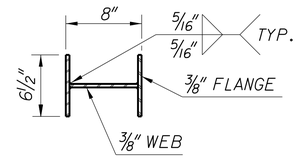

ALTERNATE POST "S"
1 1/2"=1'-0"

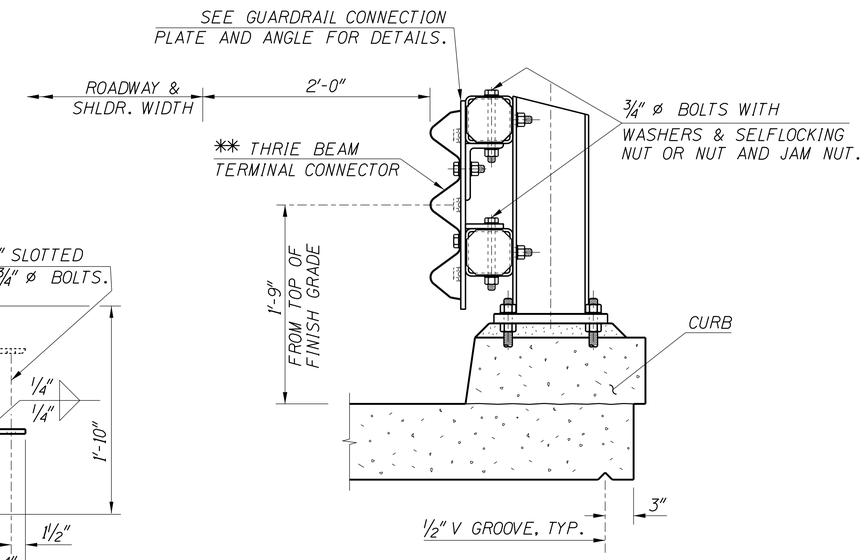

GUARDRAIL CONNECTION DETAIL
1 1/2"=1'-0"

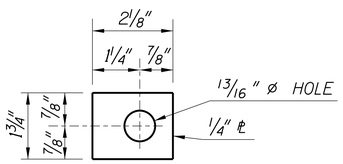

PLATE WASHER "C"
HALF SCALE

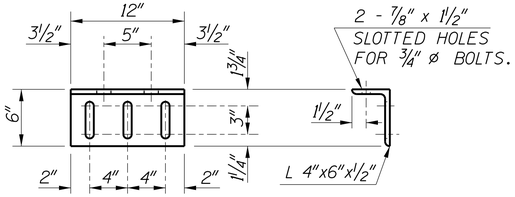

GUARDRAIL CONNECTION ANGLE
1 1/2"=1'-0"

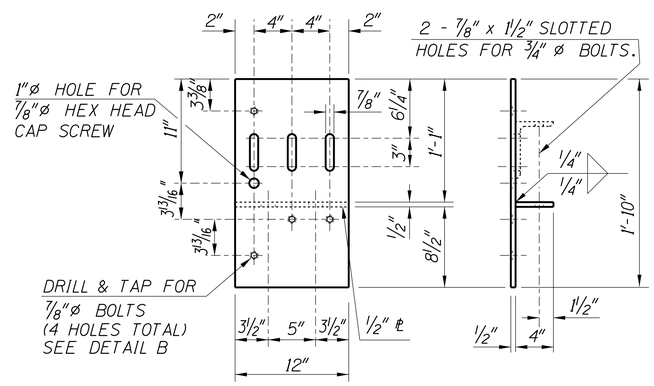

GUARDRAIL CONNECTION PLATE
1 1/2"=1'-0"

REVISIONS				DESIGNED	SCALES SHOWN ARE FOR 34" X 22" PRINTS ONLY	ORIGINAL SIGNED BY:	IDAHO TRANSPORTATION DEPARTMENT	English	TWO-TUBE CURB MOUNT RAIL W/ THRIE BEAM END CONNECTION - SHT. 2 OF 2	BRIDGE PLANS
NO.	DATE	BY	DESCRIPTION	DESIGN CHECKED	CADD FILE NO. \cadds\std_dgns\ b13_2b.dgn			PROJECT NO.		BRIDGE LRFD MANUAL, PAGE B13.2B
△				DETAILED						COUNTY / KEY NO.
△				DWG. CHECKED	DRAWING DATE: MAR 2015	DATE SIGNED: DATE				BRIDGE DRAWING NO. / SHEET OF
△				CORRECTIONS		ORIGINAL STORED AT ITD BRIDGE SECTION				