GENERAL NOTES

1. CONCRETE FOR PARAPET SHALL BE CONCRETE CLASS 40AF.
2. ALL PARAPET REINFORCING BARS SHALL BE EPOXY COATED IN ACCORDANCE WITH SUBSECTION 708.02.
3. BOTH FACES OF PARAPET SHALL RECEIVE A RUBBED SURFACE FINISH, ACCORDING TO SUBSECTION 502.03 PART I OF THE STANDARD SPECIFICATIONS.
4. THE BID ITEM "COMBINATION PEDESTRIAN/BICYCLE & TRAFFIC RAILING" SHALL CONSIST OF FURNISHING ALL MATERIAL AND LABOR NECESSARY FOR THE CONSTRUCTION OF THE CONCRETE PARAPET AND METAL RAILING AS SHOWN ON THE PLANS, COMPLETE IN PLACE.
5. PARAPET PLACEMENT SHALL FOLLOW THE SAME SEQUENCE AS THE DECK PLACEMENT.
6. THE CONCRETE SURFACE OF THE PARAPET SHALL BE WATER CURED IN ACCORDANCE WITH SUBSECTION 502.03.
7. HEIGHT OF PARAPET SHALL BE ADJUSTED TO COMPENSATE FOR THE CAMBER AND LOAD DEFLECTION OF THE SUPERSTRUCTURE. THE AMOUNT OF ADJUSTMENT WILL BE DETERMINED BY THE CONTRACTOR AND APPROVED BY THE ENGINEER.

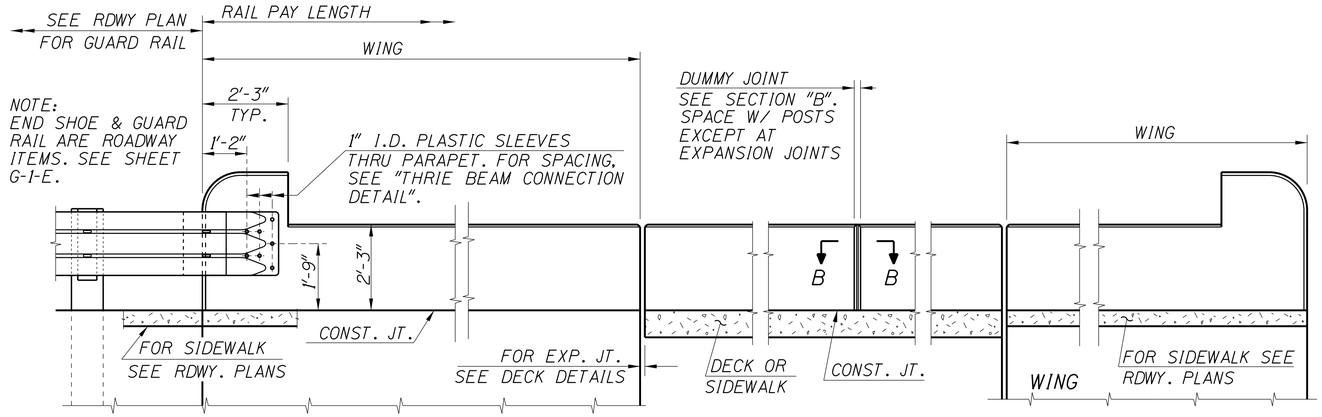

WITH THRIE BEAM GUARD RAIL CONNECTION

WITH CONCRETE GUARD RAIL CONNECTION OR WITHOUT GUARD RAIL CONNECTION

ELEVATION OF CONCRETE PARAPET
1/2"=1'-0"

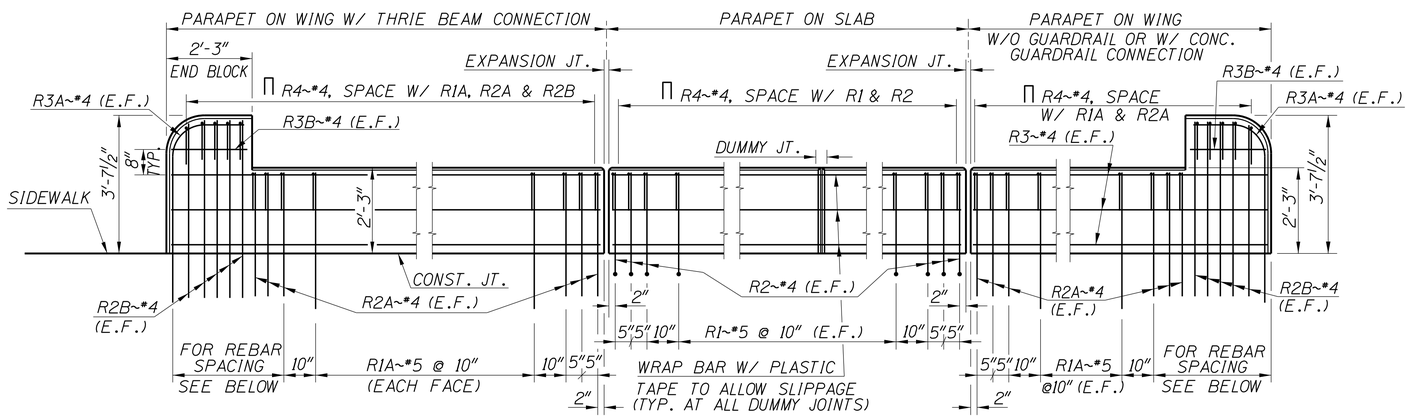

ELEVATION OF PARAPET REINFORCEMENT
1/2"=1'-0"

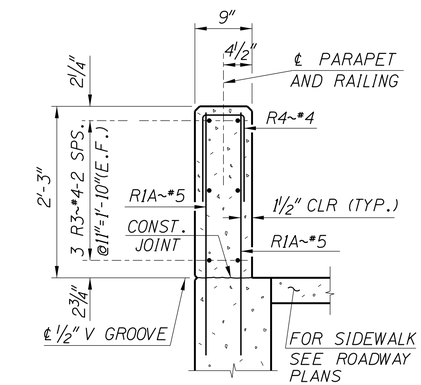

SECTION THRU WING
1"=1'-0"

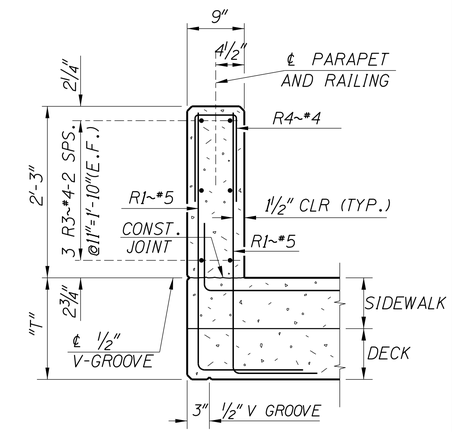

SECTION THRU DECK
1"=1'-0"

APPROXIMATE PARAPET QUANTITIES	
STRUCTURAL STEEL : (INCL. RAILING & CHANNEL)	12 LB./L.F.
CONCRETE:	1.70 FT^3 /L.F.
REINFORCEMENT:	15.5 LB./L.F.

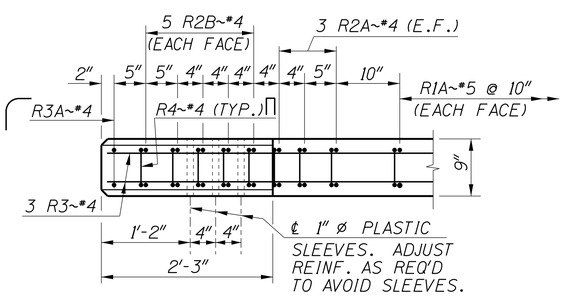

PLAN - END BLOCK
1"=1'-0"

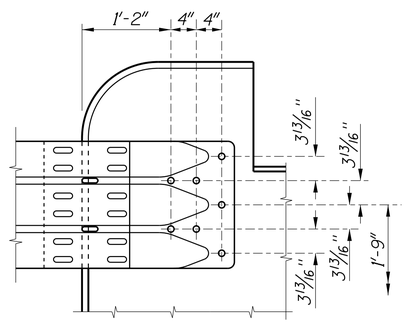

THRIE BEAM CONNECTION DETAIL
1"=1'-0"

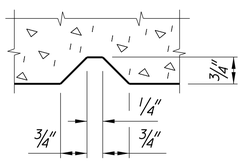

DUMMY JOINT ~ SECTION B-B
(TYPICAL @ BOTH SIDES OF PARAPET)
NO SCALE

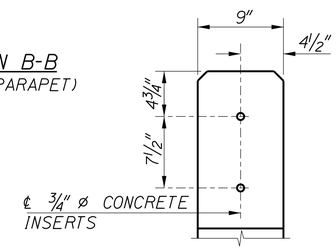

RAILING INSERTS DETAIL
1"=1'-0"

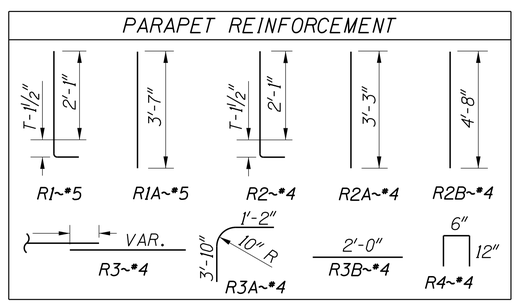

REVISIONS			
NO.	DATE	BY	DESCRIPTION
△			
△			
△			
△			
△			

DESIGNED
DESIGN CHECKED
DETAILED
DWG. CHECKED
CORRECTIONS

SCALES SHOWN ARE FOR 34" X 22" PRINTS ONLY
CADD FILE NO. \cadds\std_dgns\ b13_3c.dgn
DRAWING DATE: JUNE 2013

DATE: _____

IDAHO TRANSPORTATION DEPARTMENT

English

PROJECT NO.

CONCRETE PARAPET FOR COMBINATION RAILING

WITHOUT APPROACH SLAB

BRIDGE PLANS

BRIDGE LRFD MANUAL, PAGE B13.3C

COUNTY | KEY NO.

BRIDGE DRAWING NO. | SHEET OF