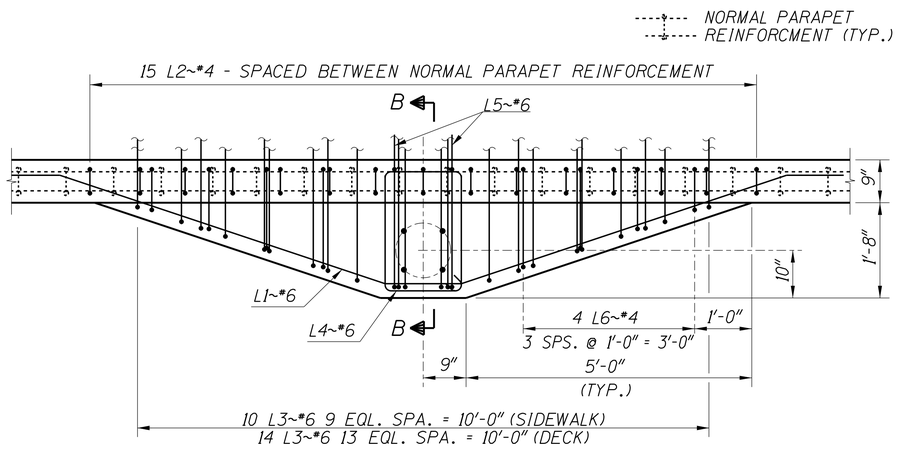

PLAN
3/4"=1'-0"

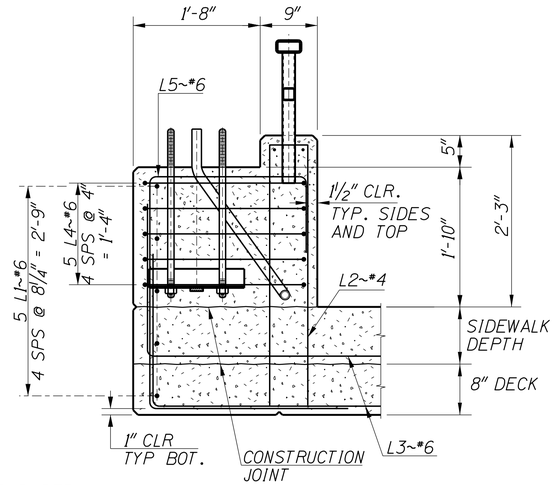

NOTE:
NORMAL PARAPET
REINFORCMENT NOT
SHOWN FOR CLARITY.

SECTION B-B
1"=1'-0"

NOTES

1. CONCRETE SHALL BE CLASS 40AF.
2. ANCHOR BOLTS, NUTS, AND WASHERS SHALL CONFORM TO ASTM F-1554, GRADE 55 AND ARE TO BE GALVANIZED IN ACCORDANCE WITH ASTM A-153 UNLESS NOTED OTHERWISE. EACH ANCHOR BOLT SHALL BE FURNISHED WITH 2 NUTS AND 2 WASHERS AT LIGHT POLE BASE PLATE AND 1 NUT AT EMBEDDED END.
3. ANGLES AND PLATES SHALL BE AASHTO M-270, GRADE 36.
4. ALL REINFORCEMENT SHALL BE EPOXY COATED IN ACCORDANCE WITH SUBSECTION 708.02.
5. GROUT SHALL CONFORM TO TYPE B CLASS 1 AS SPECIFIED IN SUBSECTION 506.03 PARAGRAPH H.
6. SEE COMBINATION RAILING DRAWING FOR NORMAL PARAPET REINFORCEMENT.
7. THE LOCATION OF LIGHT POLE SUPPORTS MAY BE FIELD ADJUSTED ±3 FEET TO AVOID CONFLICT.
8. SEE ROADWAY PLANS FOR LIGHT POLE DETAILS. FURNISHING AND INSTALLING LIGHT POLES AND ALL ELECTRICAL ITEMS IS A ROADWAY PAY ITEM.
9. CONCRETE, REINFORCING STEEL, ANCHOR BOLT ASSEMBLIES, AND GROUT FOR LIGHT POLE SUPPORTS SHALL BE INCIDENTAL TO BID ITEM "COMBINATION PEDESTRIAN/BICYCLE AND TRAFFIC RAILING".
10. MAXIMUM MOUNTING HEIGHT IS 50 FEET. MAXIMUM ARM LENGTH IS 15 FEET.

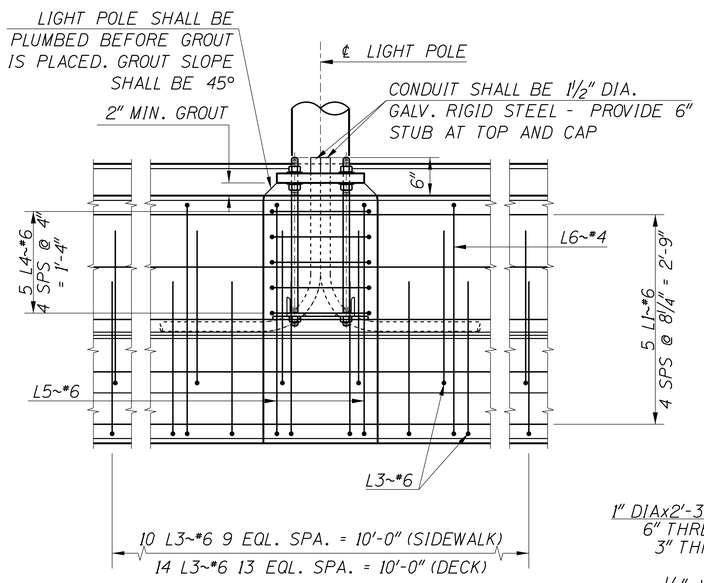

NOTE:
NORMAL PARAPET REINFORCMENT
NOT SHOWN FOR CLARITY.

ELEVATION
1"=1'-0"

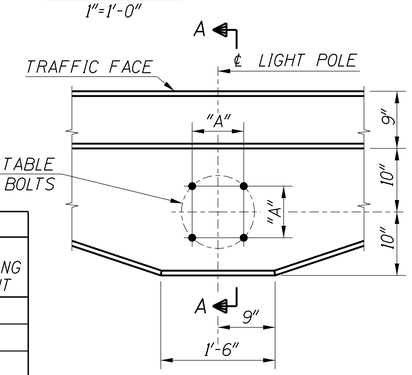

BOLT CIRCLE PLAN
1"=1'-0"

BOLT CIRCLE TABLE	50' MOUNTING HEIGHT	40' MOUNTING HEIGHT
DIAMETER	16"	11½"
"A"	11¼"	8⅛"
"B"	5⅝"	4 1/16"

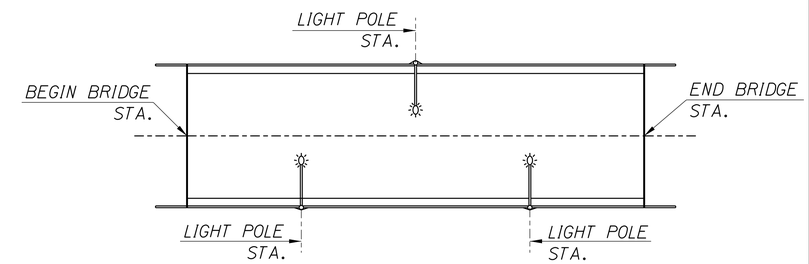

LIGHT POLE LAYOUT
N.T.S.

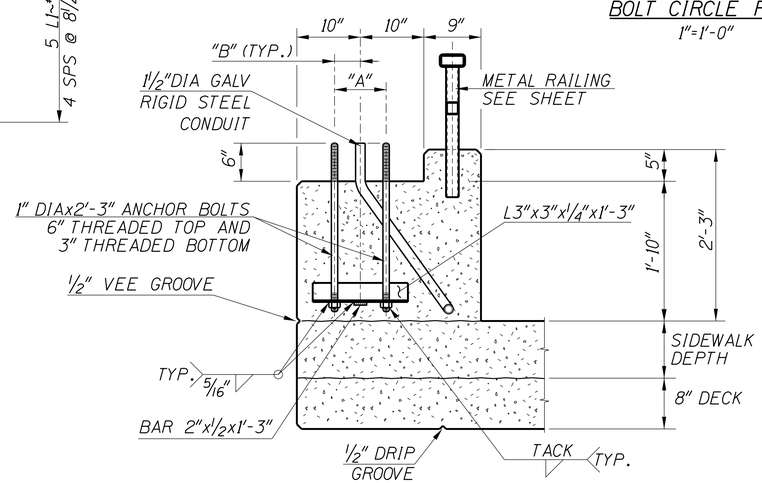

SECTION A-A ANCHOR BOLT DETAILS
1"=1'-0"

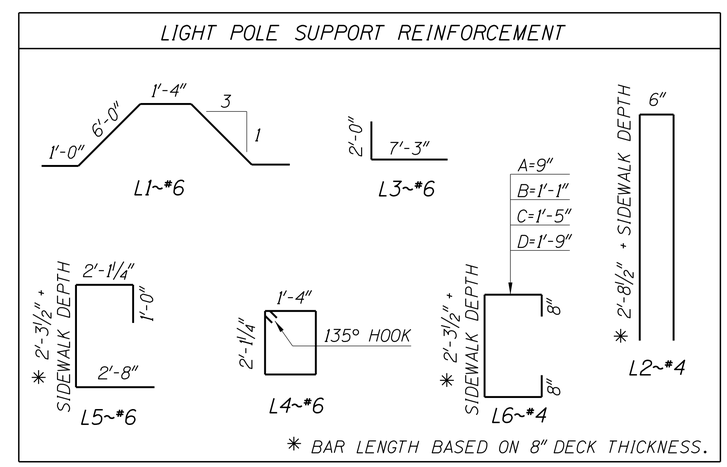

REVISIONS			
NO.	DATE	BY	DESCRIPTION
△			
△			
△			
△			
△			

DESIGNED
DESIGN CHECKED
DETAILED
DWG. CHECKED
CORRECTIONS

SCALES SHOWN ARE FOR 34" X 22" PRINTS ONLY
CADD FILE NO.
\cadds\std_dgns\
b13_3e.dgn
DRAWING DATE:
JUNE 2013

DATE:

IDAHO TRANSPORTATION DEPARTMENT

English

PROJECT NO.

COMBINATION RAIL LIGHT POLE SUPPORT

BRIDGE PLANS
BRIDGE LRFD MANUAL, PAGE B13.3E
COUNTY | KEY NO.
BRIDGE DRAWING NO. | SHEET
OF