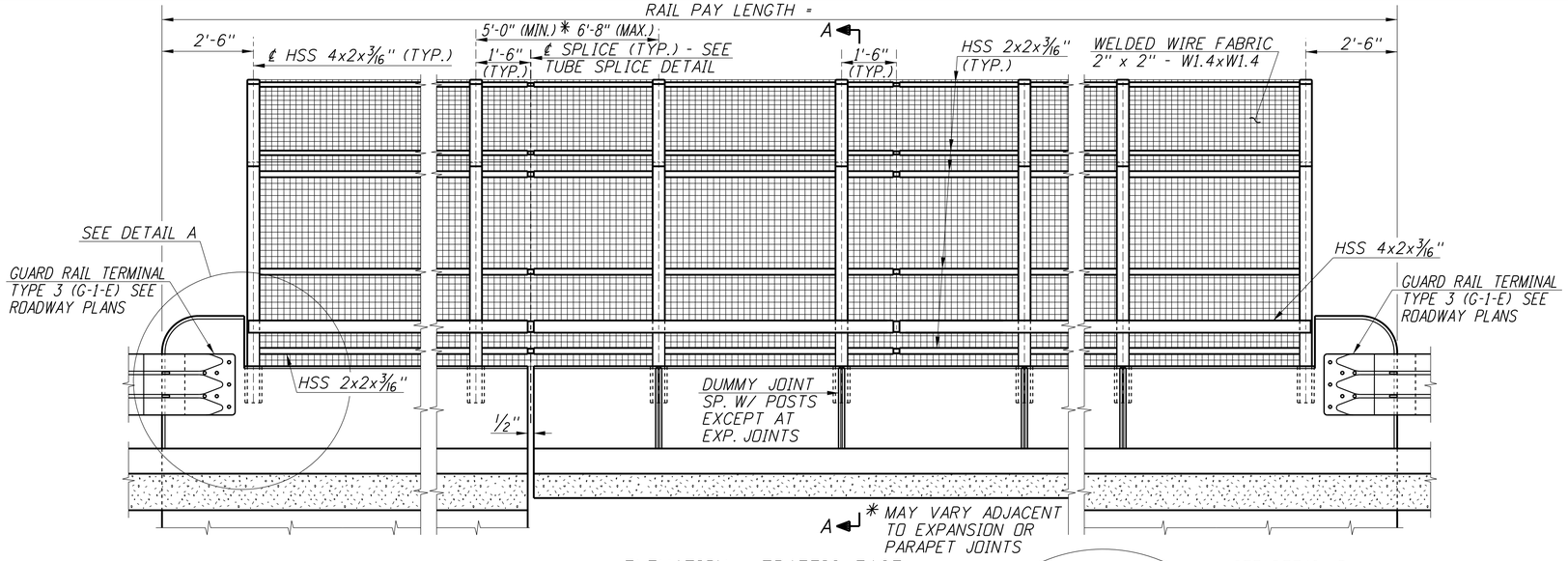


ELEVATION - TRAFFIC FACE
1/2"=1'-0"

## GENERAL NOTES

1. RAILING SHALL BE FABRICATED FROM A.S.T.M. A-500 GRADE B OR A.S.T.M. A-501 STEEL. PLATES AND SLEEVES TO BE A.S.T.M. A-36 STEEL.
2. THE RAILING SHALL BE FABRICATED IN A PLANT EXPERIENCED IN PRODUCING RAILINGS AND ARCHITECTURAL METAL WORK AND SHALL BE ERECTED BY SKILLED WORKMEN EXPERIENCED IN THIS TYPE OF WORK.
3. FABRICATION AND ERECTION OF THE RAILING SHALL CONFORM TO THE REQUIREMENTS OF THE AASHTO SPECIFICATIONS FOR HIGHWAY BRIDGES AND ITD STANDARD SPECIFICATIONS.
4. SHOP DRAWINGS SHALL BE SUBMITTED TO THE ENGINEER ELECTRONICALLY IN PDF FORMAT IN ACCORDANCE WITH SECTION 504 AND SHALL INCLUDE COMPLETE DIMENSIONS AND DETAILS OF FABRICATION INCLUDING AN ERECTION DIAGRAM. MATERIALS BEING USED SHALL BE CLEARLY SPECIFIED. BEFORE PROJECT COMPLETION, THE CONTRACTOR SHALL FURNISH THE ENGINEER ELECTRONIC AS-BUILT SHOP DRAWINGS IN PDF FORMAT.
5. ALL POSTS SHALL BE PLUMB.
6. RAILINGS AND SLEEVES SHALL BE GALVANIZED AFTER FABRICATION IN ACCORDANCE WITH A.S.T.M. SPECIFICATION A-123 AND A.S.T.M. A-385. ALL WELDED AREAS SHALL BE THOROUGHLY CLEANED PRIOR TO GALVANIZING TO REMOVE ALL SLAG OR OTHER MATERIAL THAT WOULD INTERFERE WITH THE ADHERENCE OF THE ZINC. THE GALVANIZED SURFACES SHALL BE FREE OF FINS, ABRASIONS, ROUGH OR SHARP EDGES OR OTHER SURFACE DFECTS.
7. ALL ENDS OF TUBE SECTIONS AT SPLICES SHALL BE SAWED OR MILLED. CUT ENDS SHALL BE TRUE, SMOOTH AND FREE FROM BURRS OR RAGGED EDGES.
8. VENT HOLES FOR GALVANIZING SHALL BE PROVIDED AS REQUIRED AND SHOWN ON THE SHOP DRAWINGS. VENT HOLES SHALL BE DRILLED AWAY FROM TRAFFIC FACE AND NOT ON THE TOP SURFACE OF THE HORIZONTAL TUBES.
9. AFTER THE RAILING IS IN PLACE AND THE POSTS ARE SET PLUMB, THE POST BLOCKOUTS SHALL BE GROUTED USING TYPE B CLASS 1 NON-METALLIC NON-SHRINK GROUT AS SPECIFIED IN SUBSECTION 705.02.
10. ALTERNATE SPLICE DETAILS MAY BE SUBMITTED FOR APPROVAL ON THE SHOP DRAWINGS.
11. EACH RAIL SECTION SHALL BE ATTACHED TO A MINIMUM OF TWO POSTS, BUT PREFERABLY THREE OR MORE. RAILING SYSTEM SHALL BE CONTINUOUS FROM END TO END. HORIZONTAL RAIL SPLICES FOR EACH END OF RAIL SECTION SHALL BE POSITIONED TO ALIGN VERTICALLY.
12. THE RAILING SYSTEM, INCLUDING THE WELDED WIRE FABRIC AND FASTENERS, SHALL BE POWDER COATED AFTER GALVANIZING WITH A MINIMUM THICKNESS OF 3 MILS. THE COLOR SHALL BE RAL 9005 (JET BLACK). THE CONTRACTOR SHALL SUBMIT A COLOR SAMPLE FOR APPROVAL.
13. THE WELDED WIRE FABRIC SHALL CONFORM WITH A.S.T.M. A-185 AND SHALL BE SUPPLIED IN SHEET FORM.
14. THE WELDED WIRE FABRIC SHALL BE GALVANIZED IN ACCORDANCE WITH A.S.T.M. DESIGNATION A-123.
15. SECURE WELDED WIRE FABRIC TO POSTS AND RAILS WITH 3/8" DIAMETER X 1" STAINLESS STEEL THREADED STUDS AND NUT AT 1'-0" MAX SPACING. USE A 3/16" X 3/4" X 1 3/4" PLATE WASHER MADE OF STAINLESS STEEL OR HOT DIPPED GALVANIZED STEEL AT EACH THREADED STUD. ALTERNATE FASTENING METHODS MAY BE SUBMITTED FOR APPROVAL ON THE SHOP DRAWINGS.
16. SEE B13.3C OR B13.3D FOR CONCRETE PARAPET DETAILS.

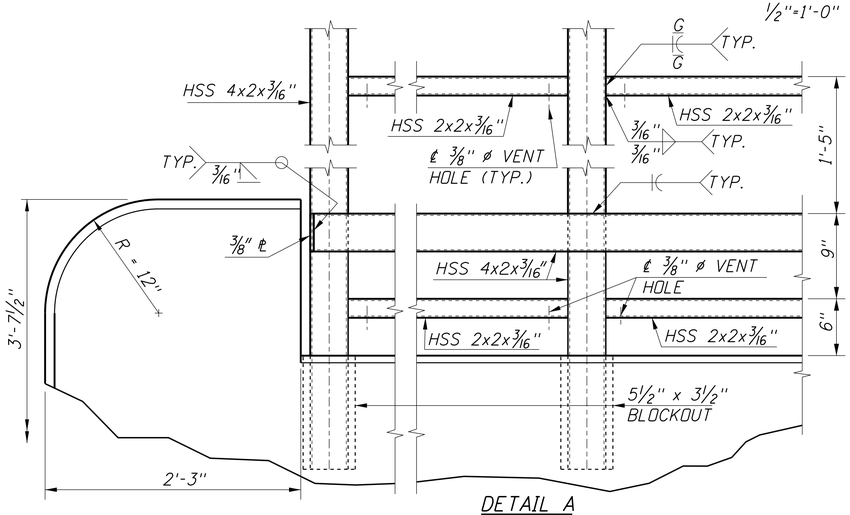


DETAIL A
1 1/2"=1'-0"

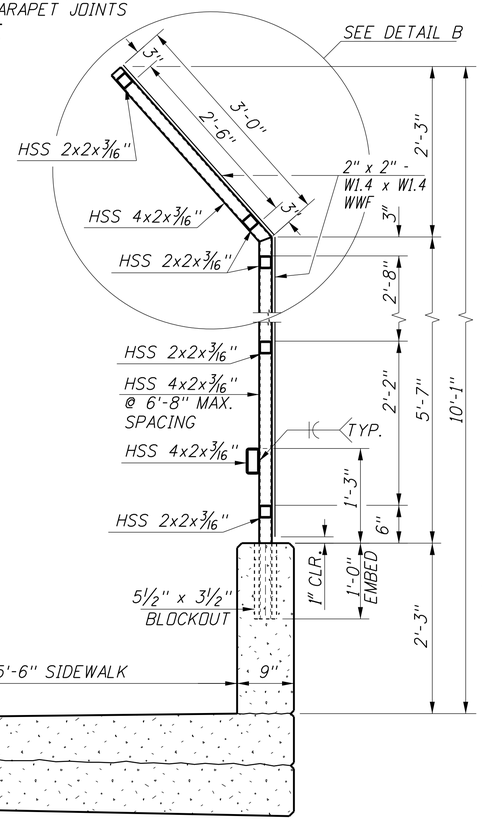


SECTION A-A
1"=1'-0"

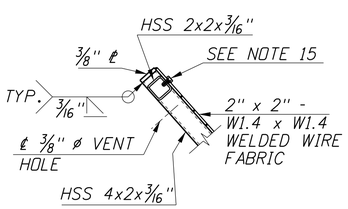


DETAIL C
1 1/2"=1'-0"

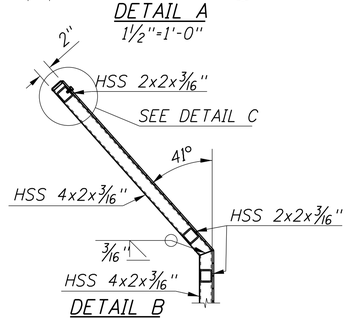


DETAIL B
1"=1'-0"

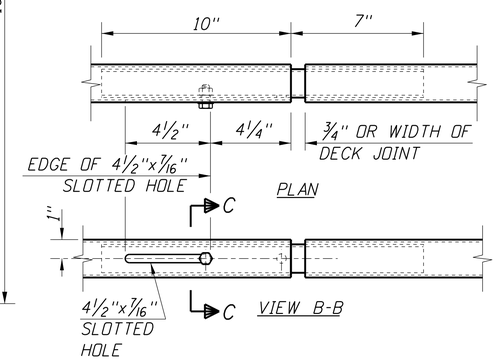


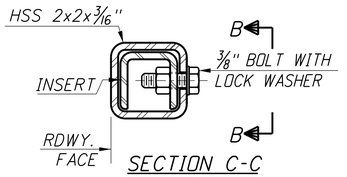


SECTION C-C
N.T.S.

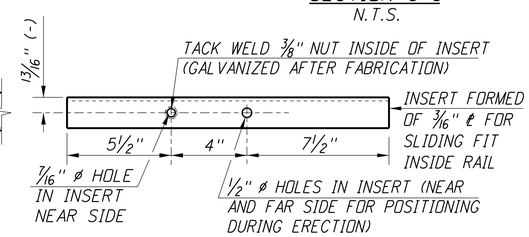


INSERT DETAIL

TUBE SPLICE DETAILS
2"x2" TUBES AS SHOWN, 4"x2" TUBES SIMILAR
3"=1'-0"

| REVISIONS | | | |
|---|---|---|---|
| NO. | DATE | BY | DESCRIPTION |
| △ | | | |
| △ | | | |
| △ | | | |
| △ | | | |
| △ | | | |

DESIGNED
DESIGN CHECKED
DETAILED
DWG. CHECKED
CORRECTIONS

SCALES SHOWN ARE FOR 34" X 22" PRINTS ONLY
CADD FILE NO. \cadds\std_dgns\ b13_3f.dgn
DRAWING DATE: MAR 2015

ORIGINAL SIGNED BY:
DATE SIGNED: DATE
ORIGINAL STORED AT ITD BRIDGE SECTION

IDAHO TRANSPORTATION DEPARTMENT

English
PROJECT NO.
0000

PROTECTIVE PEDESTRIAN FENCE FOR COMBINATION RAIL CONCRETE PARAPET
PROJECT
LOCATION
STA

BRIDGE PLANS
BRIDGE LRFD MANUAL, PAGE B13.3F

| COUNTY | KEY NO. |
|---|---|
| ABC | 0000 |
| BRIDGE DRAWING NO. | SHEET |
| 00000 | 0 OF 0 |