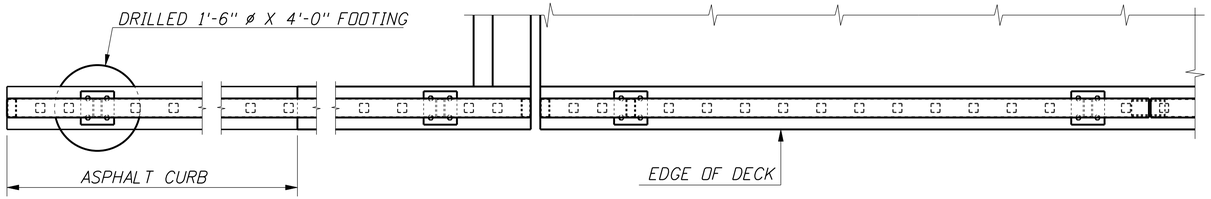

PARTIAL PLAN
3/4"=1'-0"

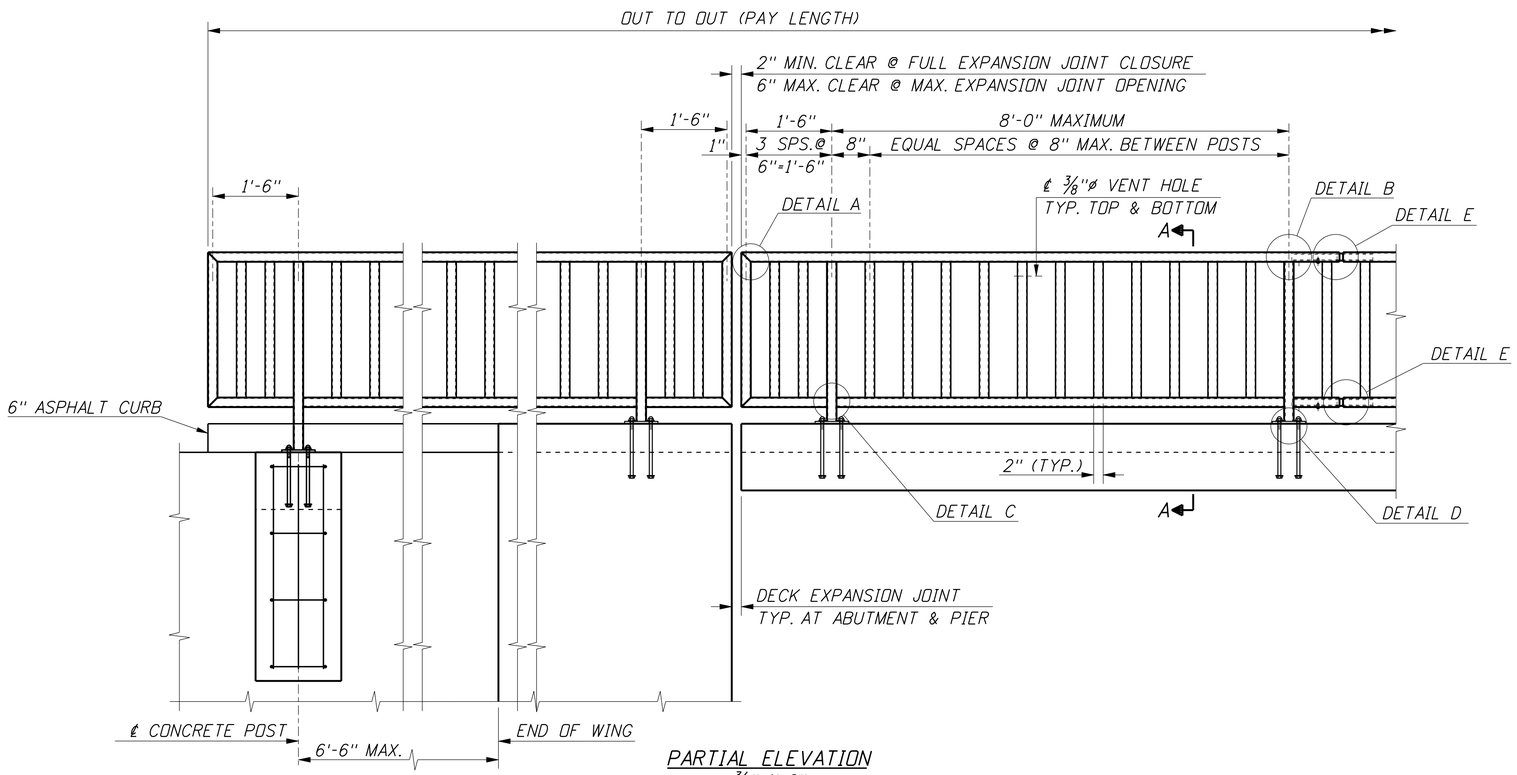

PARTIAL ELEVATION
3/4"=1'-0"

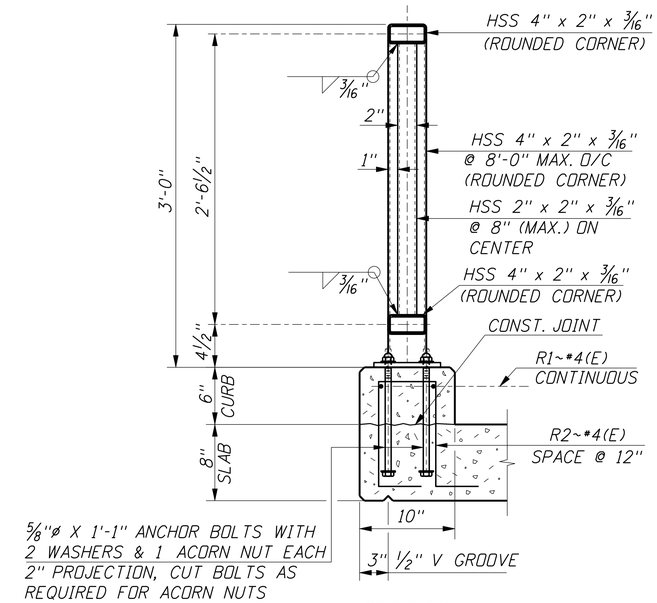

SECTION A-A
1 1/2"=1'-0"

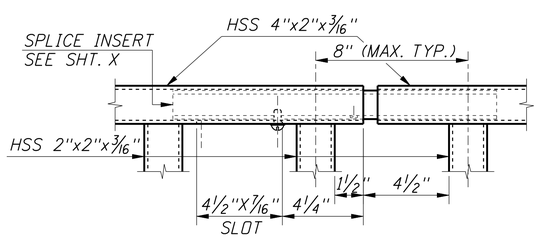

UPPER SPLICE CONNECTION ELEVATION
3"=1'-0"

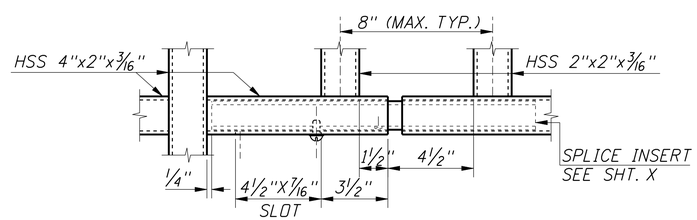

LOWER SPLICE CONNECTION ELEVATION
3"=1'-0"

NOTE:
SEE SHEET NO. * FOR ALL DETAILS, NOTES AND REINFORCEMENT DETAILS.

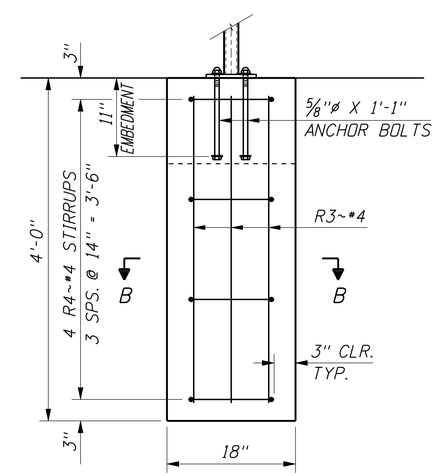

ELEVATION

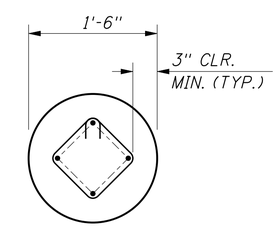

SECTION B-B

DRILLED CONCRETE POST BASE DETAIL
1"=1'-0"

REVISIONS			
NO.	DATE	BY	DESCRIPTION
△			
△			
△			
△			
△			

DESIGNED
DESIGN CHECKED
DETAILED
DWG. CHECKED
CORRECTIONS

SCALES SHOWN ARE FOR 34" X 22" PRINTS ONLY
CADD FILE NO. \cadds\std_dgns\ b13_4b.dgn
DRAWING DATE: MAR 2011

ORIGINAL SIGNED BY:
DATE SIGNED: DATE
ORIGINAL STORED AT ITD BRIDGE SECTION

IDAHO TRANSPORTATION DEPARTMENT

English
PROJECT NO.

STANDARD PEDESTRIAN/BICYCLE RAILING

BRIDGE PLANS
BRIDGE LRFD MANUAL, PAGE B13.4B
COUNTY | KEY NO.
BRIDGE DRAWING NO. | SHEET OF