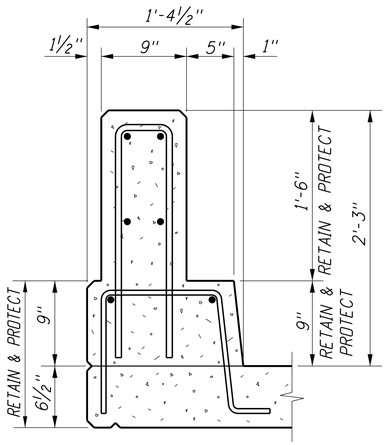

EXISTING TYP. DECK SECTION
NTS

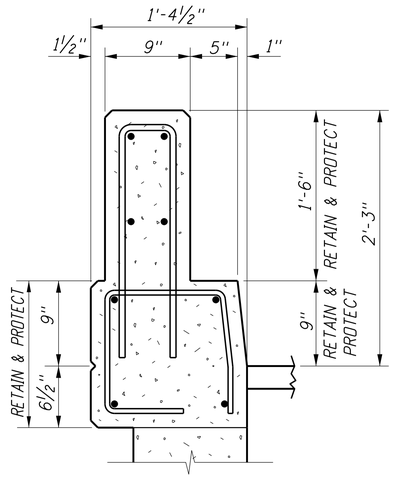

EXISTING TYP. WINGWALL SECTION
NTS

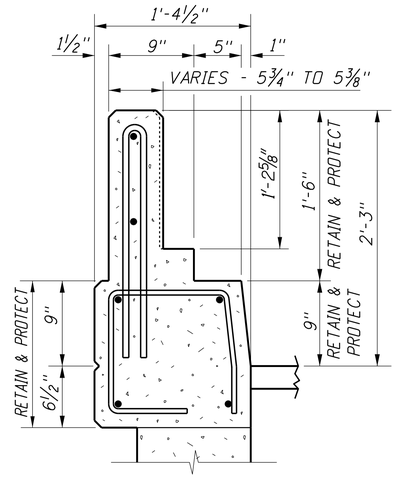

EXISTING TYP. WINGWALL END SECTION
NTS

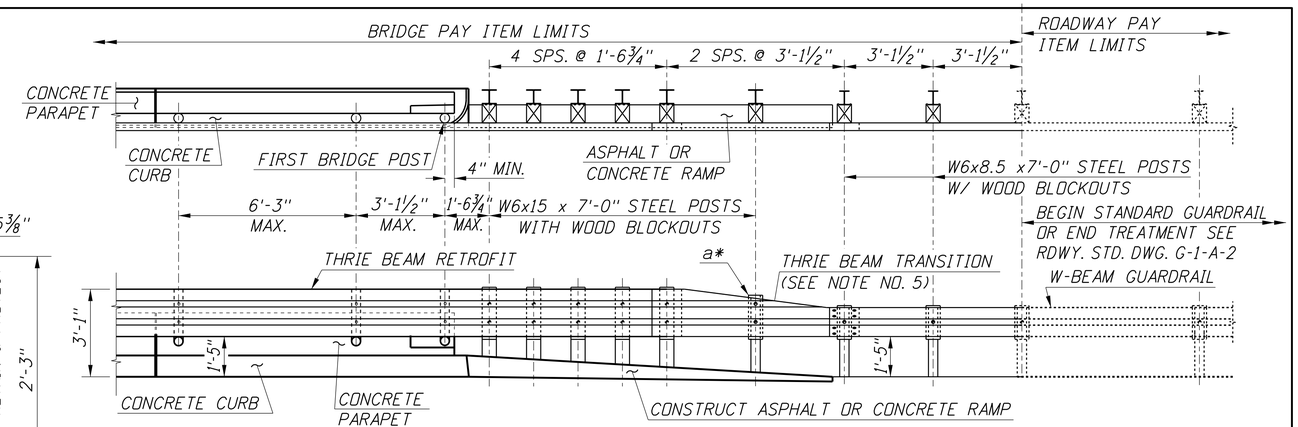

THRIE BEAM TO W-BEAM GUARDRAIL TRANSITION
(TYPICAL FOR APPROACH AND TRAILING END OF BRIDGE)
NTS

*a TOP OF POST AND BLOCK SHALL BE TRIMMED TO FIT THE SLOPE ON THE THRIE BEAM TRANSITION.

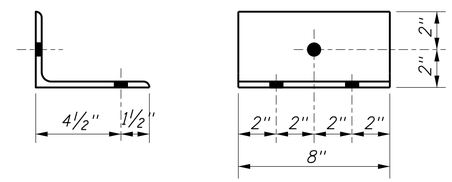

DETAIL A
3"=1'-0"

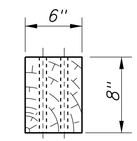

PLAN

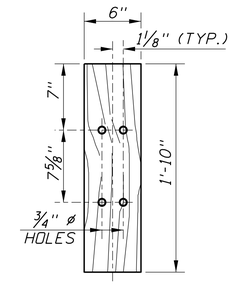

ELEVATION

W6x15 POST WOOD BLOCK
(SEE NOTE 6)
1½"=1'-0"

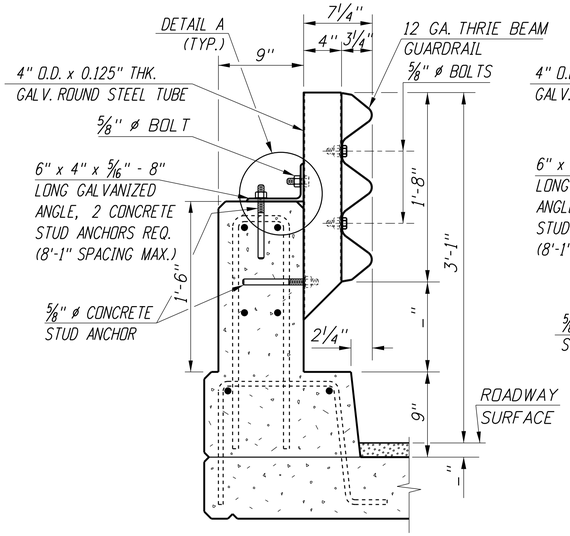

THRIE BEAM RETROFIT TYPE 4
DECK SECTION
NTS

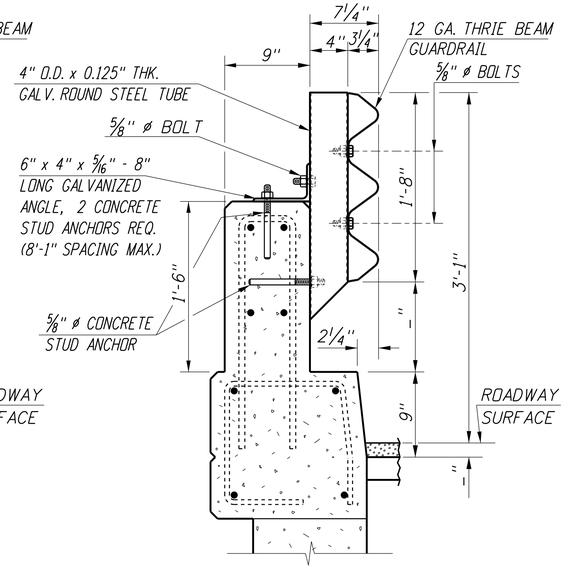

THRIE BEAM RETROFIT TYPE 4
WINGWALL SECTION
NTS

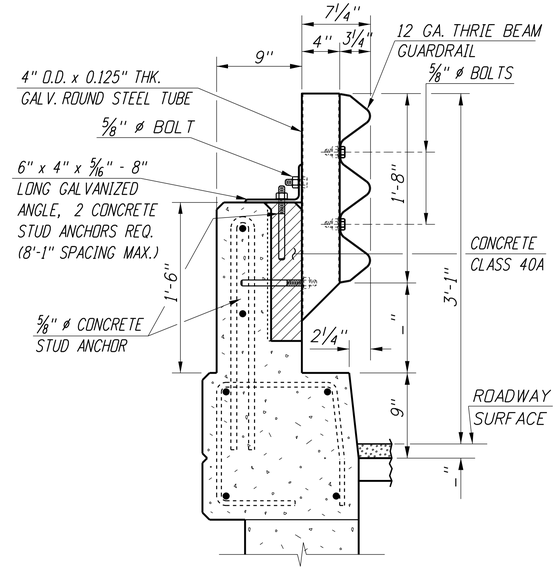

THRIE BEAM RETROFIT TYPE 4
WINGWALL END SECTION
NTS

NOTES

1. FIELD CUTS AND FIELD DRILLED HOLES SHALL BE CLEANED AND PAINTED WITH 5 MILS MINIMUM THICKNESS OF FORMULA 2 ZINC RICH PAINT IN ACCORDANCE WITH SECTION 627 AND SECTION 707.
2. BOLT HOLES ON POST SIDE OF ROUND TUBE SHALL BE 3" VERTICAL SLOT.
3. THIS DRAWING REQUIRES STANDARD DRAWINGS G-1-A-1 THROUGH G-1-A-5 AND IS SUBJECT TO THE W-BEAM AND THRIE BEAM GUARDRAIL INSTALLATION/REQUIREMENTS AND HARDWARE/ACCESSORY SPECIFICATIONS.
4. THE COST OF THE ASPHALT OR CONCRETE RAMP AND ALL HARDWARE INCLUDING SPACER BLOCKS, NUTS, BOLTS, ETC. NECESSARY TO PROVIDE A COMPLETE INSTALLATION SHALL BE CONSIDERED INCIDENTAL TO THE COST OF THIS ITEM.
5. TRANSITION SECTION SHALL BE ASYMMETRICAL. REFER TO ROADWAY STANDARD DRAWING G-1-A-5 FOR DETAILS.
6. SEE ROADWAY STANDARD DRAWING G-1-A-3, NOTE 7 FOR USE OF POLYETHYLENE BLOCKOUTS.

REVISIONS			
NO.	DATE	BY	DESCRIPTION
△			
△			
△			
△			
△			

DESIGNED
DESIGN CHECKED
DETAILED
DWG. CHECKED
CORRECTIONS

SCALES SHOWN ARE FOR 34" X 22" PRINTS ONLY
CADD FILE NO. \cadds\std_dgns\ b13_7c.dgn
DRAWING DATE: MAY 2014

ORIGINAL SIGNED BY:
DATE SIGNED: DATE
ORIGINAL STORED AT ITD BRIDGE SECTION

IDAHO TRANSPORTATION DEPARTMENT

English
PROJECT NO.

G-2-F TYPE 4 RAIL RETROFIT DETAILS
29" RAIL HEIGHT

BRIDGE PLANS
BRIDGE LRFD MANUAL, PAGE B13.7C
COUNTY | KEY NO.
BRIDGE DRAWING NO. | SHEET OF