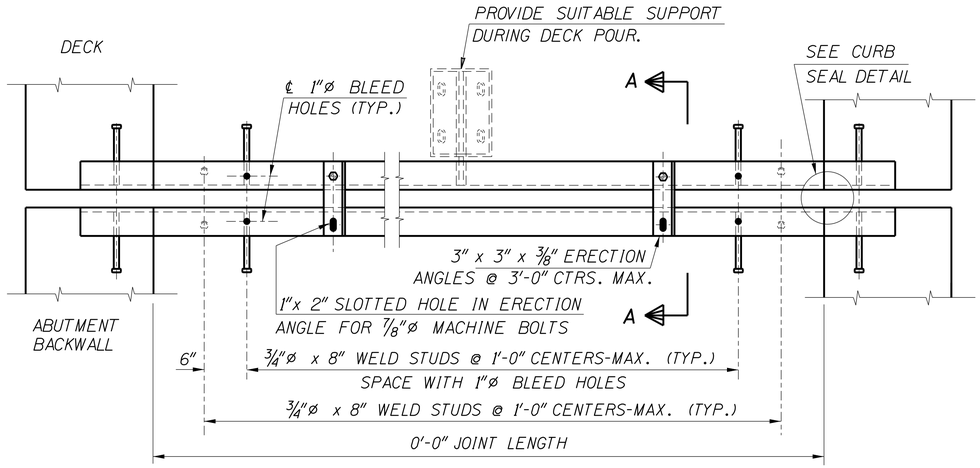

PLAN
NO SCALE

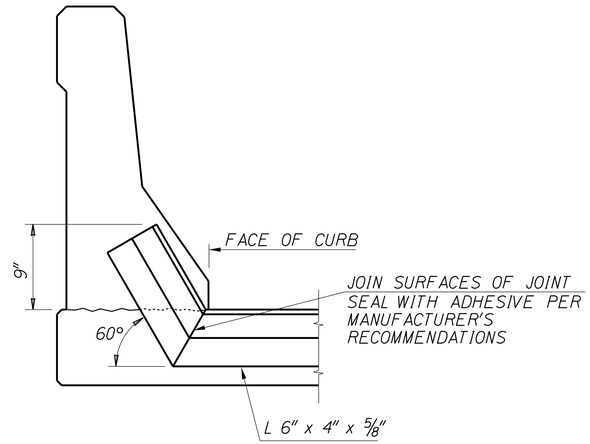

TYPICAL CURB SEAL DETAIL
NO SCALE

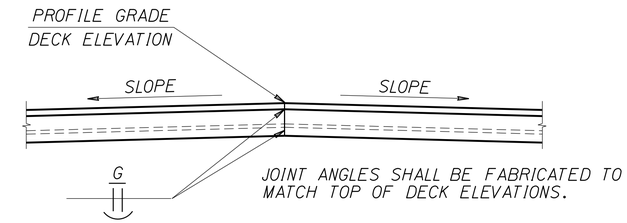

CROWN DETAIL
NO SCALE

EXPANSION JOINT NOTES

1. ALL STRUCTURAL STEEL SHALL CONFORM TO AASHTO M270, GRADE 36, AND SHALL BE GALVANIZED IN ACCORDANCE WITH AASHTO M111.
2. THE TOP OF THE JOINT ANGLE SHALL BE INSTALLED PARALLEL TO THE PROFILE GRADE.
3. JOINT ANGLES SHALL HAVE A MINIMUM THICKNESS OF 5/8".
4. CONTRACTOR SHALL PROVIDE SUITABLE SUPPORT DURING DECK POUR AND SHOP PLANS SHALL INCLUDE SUPPORT SYSTEM DETAILS.
5. DIMENSIONS * MARKED ARE PER MANUFACTURER'S RECOMMENDATIONS.
6. THE EXPANSION JOINT SHALL BE ADJUSTED 0" FOR EVERY 10° CHANGE IN TEMPERATURE FROM THE MEDIAN TEMPERATURE OF 60°F AT THE TIME OF INSTALLATION OF THE JOINT.
7. WHEN A DECK OVERLAY IS SPECIFIED, JOINT INSTALLATION SHALL BE COMPLETED PRIOR TO PLACING THE DECK OVERLAY.
8. JOINT SEAL SHALL BE CONTINUOUS BETWEEN FACE OF CURBS.
9. WHEN THE JOINT ANGLES EXCEEDS 60' IN LENGTH, A MAXIMUM OF TWO FIELD SPLICES WILL BE PERMITTED. THE FIELD SPLICE SHALL NOT BE LOCATED IN THE WHEEL PATH, AND THE LOCATION SHALL BE SHOWN ON THE SHOP DRAWINGS.
10. THE SEAL SHALL BE INSTALLED AS PER MANUFACTURER'S RECOMMENDATIONS USING AN ADHESIVE LUBRICANT. ADHESIVE SHALL MEET THE REQUIREMENTS OF ASTM D-4070.
11. PREFORMED EXPANSION JOINT SEAL SHALL CONFORM TO AASHTO M-297.
12. SHOP DRAWINGS SHALL BE SUBMITTED TO THE ENGINEER ELECTRONICALLY IN PDF FORMAT IN ACCORDANCE WITH SECTION 504 AND SHALL INCLUDE COMPLETE DIMENSIONS AND DETAILS OF FABRICATION INCLUDING AN ERECTION DIAGRAM. MATERIALS BEING USED SHALL BE CLEARLY SPECIFIED. BEFORE PROJECT COMPLETION, THE CONTRACTOR SHALL FURNISH THE ENGINEER ELECTRONIC AS-BUILT SHOP DRAWINGS IN PDF FORMAT.
13. THE COMPLETED JOINT ASSEMBLY, INCLUDING ALL COMPONENTS AND SUBASSEMBLIES, SHALL BE FABRICATED BY ONE MANUFACTURER.

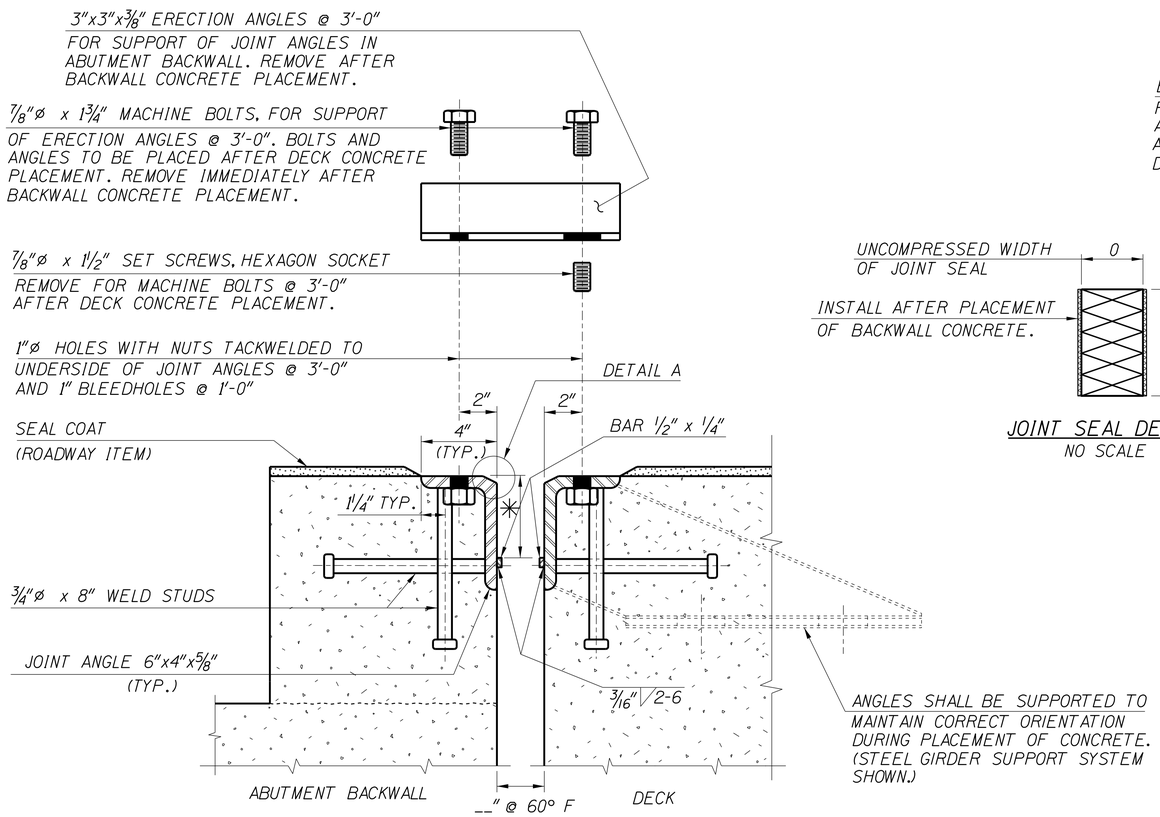

SECTION A-A
3"=1'-0"

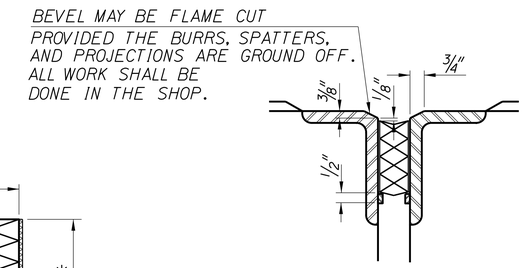

DETAIL "A"
NO SCALE

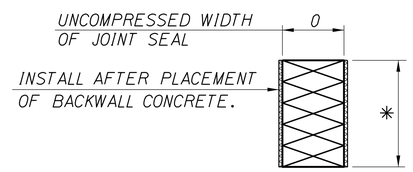

JOINT SEAL DETAIL
NO SCALE

APPROXIMATE STEEL WEIGHT 48 LB./FT.

RECOMMENDED MANUFACTURERS OF THE SHOWN JOINT ASSEMBLY						
LOCATION	MANUFACTURER	STYLE	SEAL SIZE - INCHES		INSTALLATION WIDTH NORMAL TO JOINT	
			WIDTH	DEPTH	MIN.	MAX.
	WATSON BOWMAN ACME					
	D.S. BROWN					
	LYMTAL INTERNATIONAL					

REVISIONS			
NO.	DATE	BY	DESCRIPTION

DESIGNED
DESIGN CHECKED
DETAILED
DWG. CHECKED
CORRECTIONS

SCALES SHOWN ARE FOR 34" X 22" PRINTS ONLY
CADD FILE NO. \cadds\std_dgns\ b14_1a.dgn
DRAWING DATE: MAR 2015

ORIGINAL SIGNED BY:
DATE SIGNED: DATE
ORIGINAL STORED AT ITD BRIDGE SECTION

IDAHO TRANSPORTATION DEPARTMENT

English
PROJECT NO.

COMPRESSION SEAL EXPANSION JOINT

SKEW <= 10°

BRIDGE PLANS
BRIDGE LRFD MANUAL, PAGE B14.1A
COUNTY | KEY NO.
BRIDGE DRAWING NO. | SHEET OF