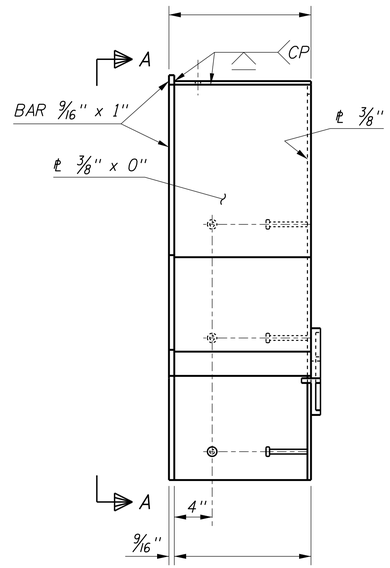


ELEVATION

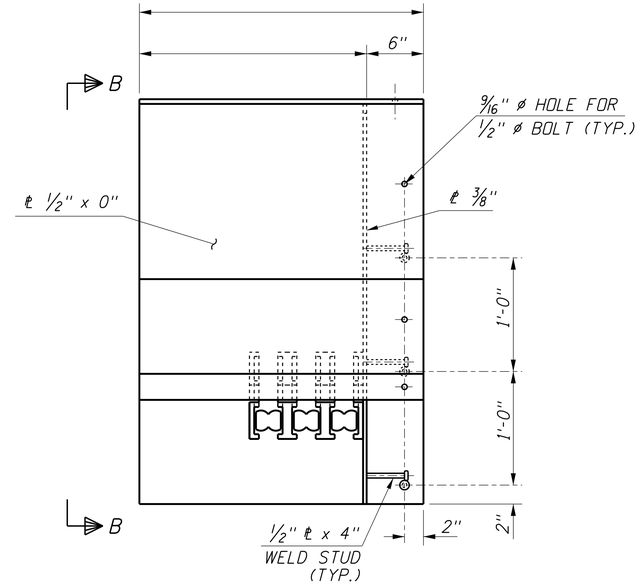


ELEVATION

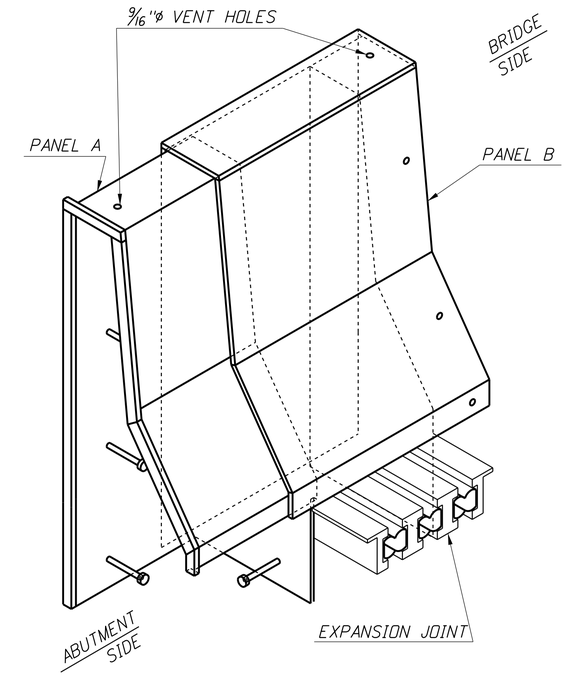


ASSEMBLED PARAPET EXPANSION JOINT

N.T.S.

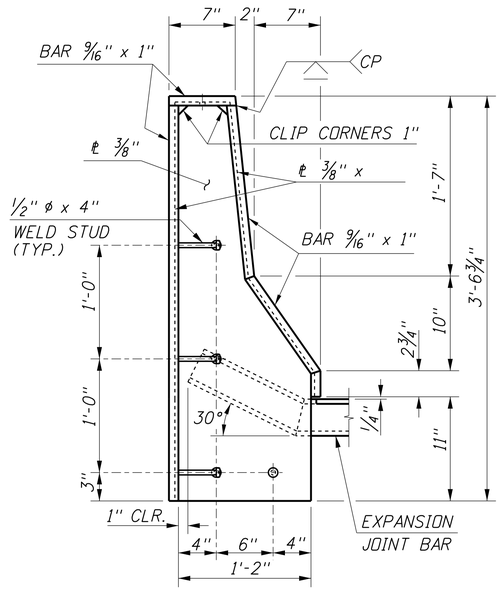


VIEW A-A

PANEL "A"

1 1/2"=1'-0"

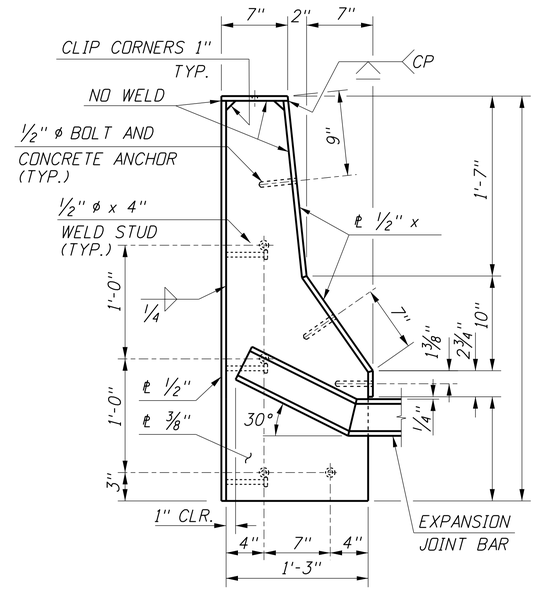


VIEW B-B

PANEL "B"

1 1/2"=1'-0"

## NOTES

1. ALL STEEL PLATES SHALL CONFORM TO AASHTO M270, GRADE 36.
2. FOR DETAILS OF EXPANSION JOINT, SEE SHEET NO. _.
3. ALL METAL PARTS SHALL BE PAINTED IN ACCORDANCE WITH SECTION 627 OF THE STANDARD SPECIFICATIONS AND USING PAINT SYSTEM NO. A, EXCEPT THE COLOR OF THE FINAL COAT SHALL BE COLOR 26492 (GRAY), FEDERAL STANDARD NUMBER 595.
4. SHOP DRAWINGS SHALL BE SUBMITTED TO THE ENGINEER ELECTRONICALLY IN PDF FORMAT IN ACCORDANCE WITH SECTION 504 AND SHALL INCLUDE COMPLETE DIMENSIONS AND DETAILS OF FABRICATION INCLUDING AN ERECTION DIAGRAM. MATERIALS BEING USED SHALL BE CLEARLY SPECIFIED. BEFORE PROJECT COMPLETION, THE CONTRACTOR SHALL FURNISH THE ENGINEER ELECTRONIC AS-BUILT SHOP DRAWINGS IN PDF FORMAT.
5. PAYMENT FOR THE PARAPET COVER PLATE ASSEMBLY SHALL BE INCLUDED IN THE UNIT PRICE FOR BID ITEM S501-06A "MODULAR EXPANSION JOINT".

| REVISIONS | | | |
|---|---|---|---|
| NO. | DATE | BY | DESCRIPTION |
| △ | | | |
| △ | | | |
| △ | | | |
| △ | | | |
| △ | | | |

DESIGNED
DESIGN CHECKED
DETAILED
DWG. CHECKED
CORRECTIONS

SCALES SHOWN ARE FOR 34" X 22" PRINTS ONLY

CADD FILE NO. \cadds\std_dgns\ b14_4a.dgn

DRAWING DATE: MAR 2015

ORIGINAL SIGNED BY:

DATE SIGNED: DATE

DATE FINAL STORED AT ITD BRIDGE SECTION

IDAHO TRANSPORTATION DEPARTMENT

English

PROJECT NO.

PARAPET COVER PLATES

FOR MODULAR JOINT

BRIDGE PLANS

BRIDGE LRFD MANUAL, PAGE B14.4A

COUNTY | KEY NO.

BRIDGE DRAWING NO. | SHEET OF