STRUCTURE WIDTH

BRIDGES – NO SIDEWALK

Concrete Parapet

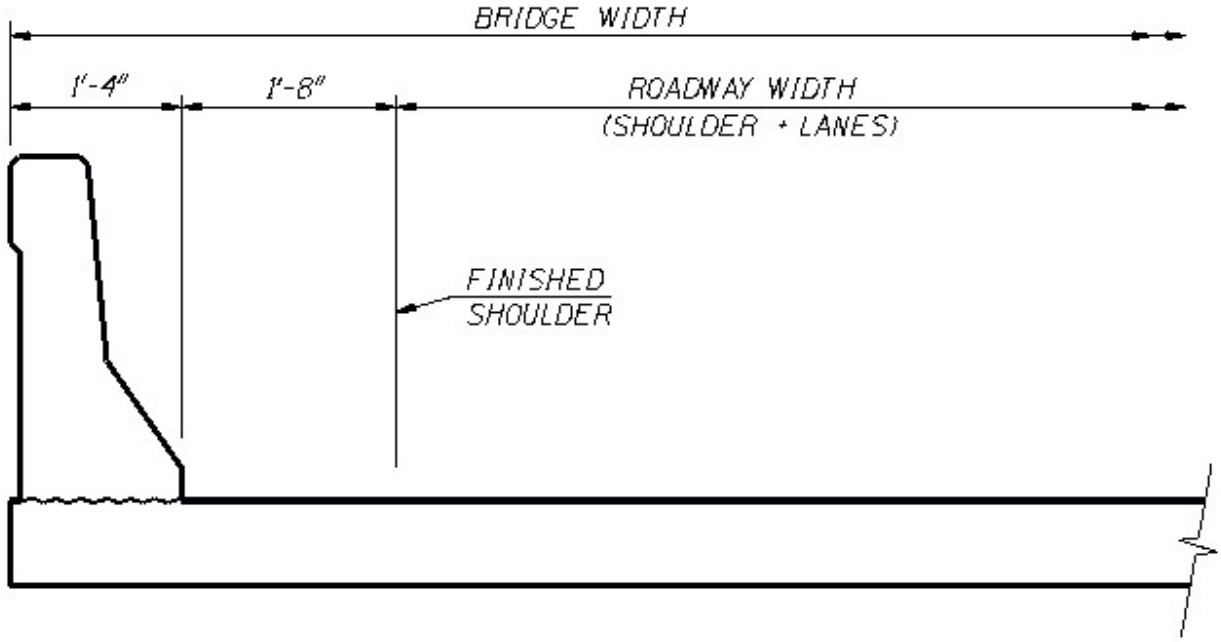

Two Tube Curb Mount Rail

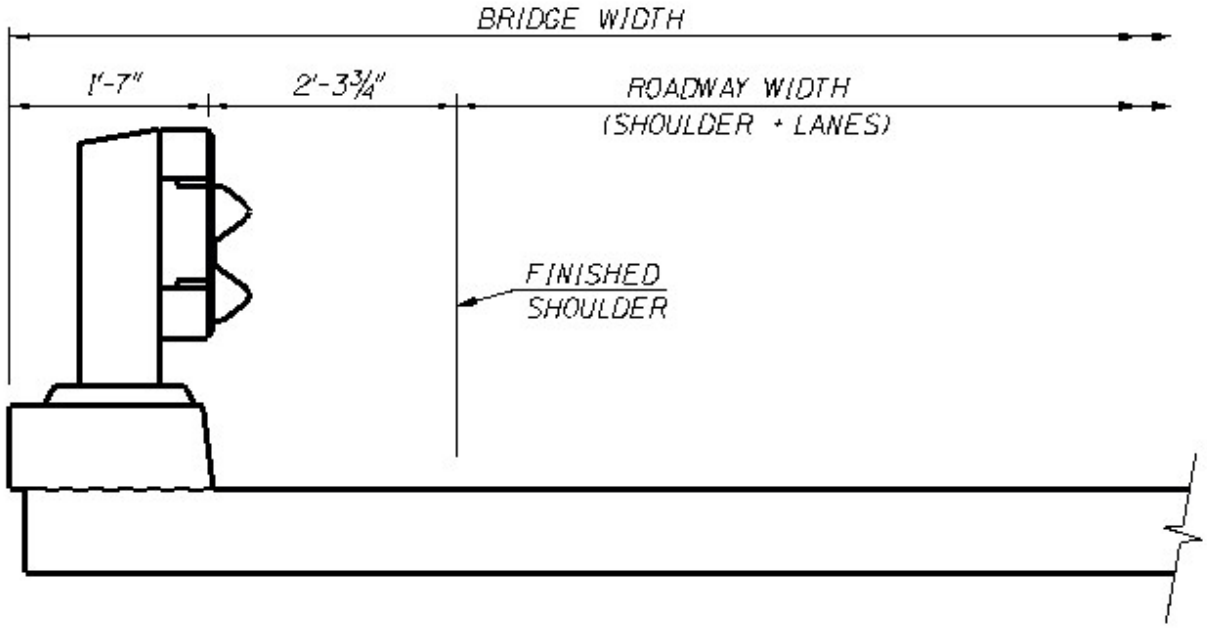

BRIDGES – RAISED SIDEWALK WITH SPEEDS 45mph AND LOWER

Combination Rail

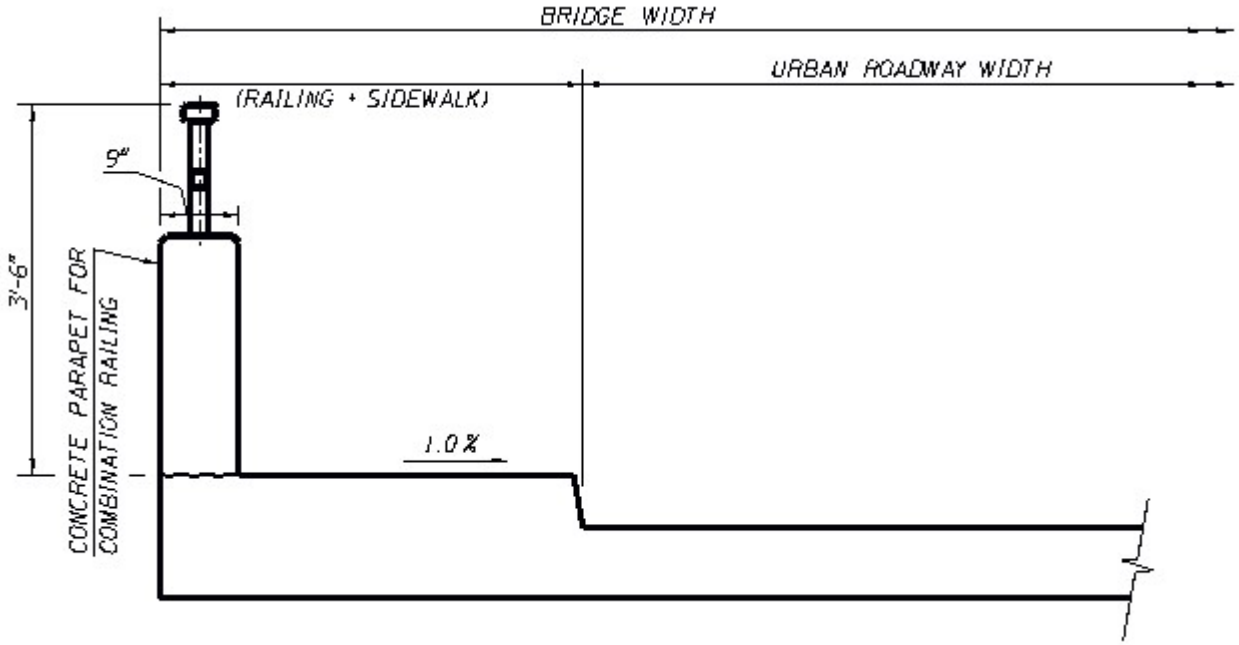

BRIDGES – AT-GRADE SIDEWALK FOR SPEEDS OVER 45mph

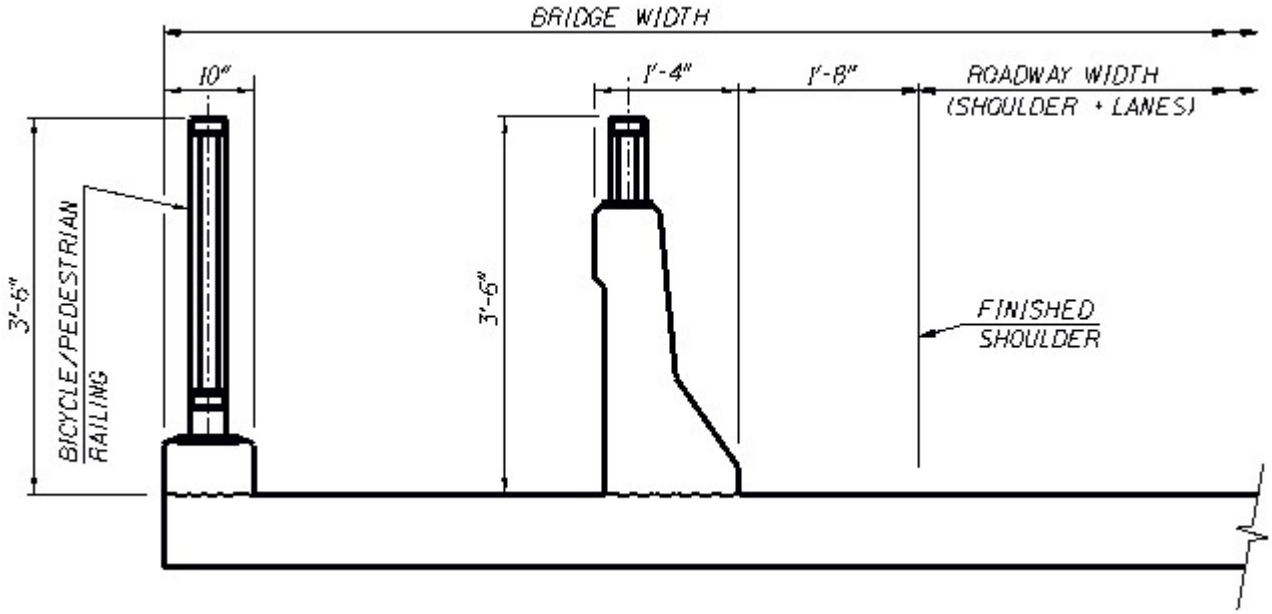

CULVERTS – CLEAR ZONE PROVIDED

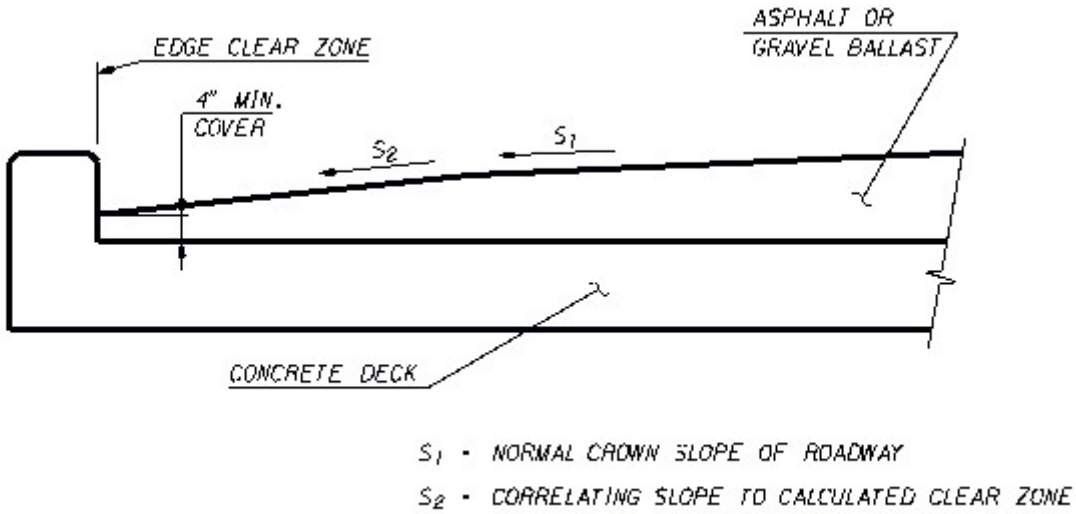

CULVERTS – CLEAR ZONE NOT PROVIDED
Test Level 3 Rail

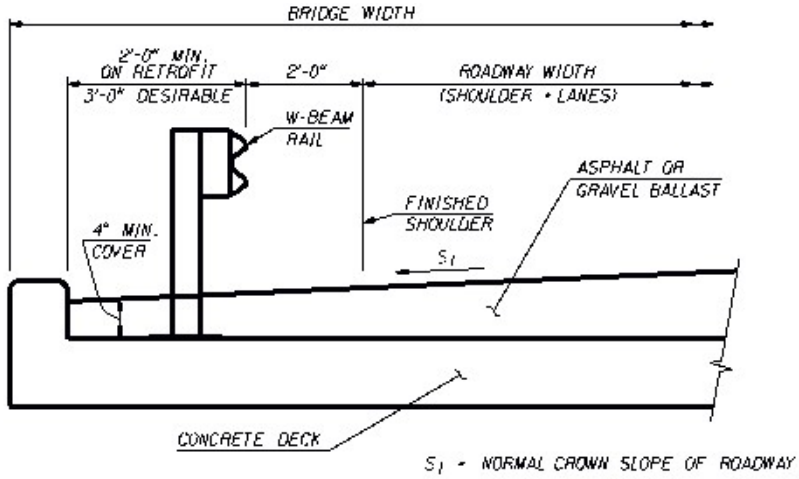

Test Level 4 Rail

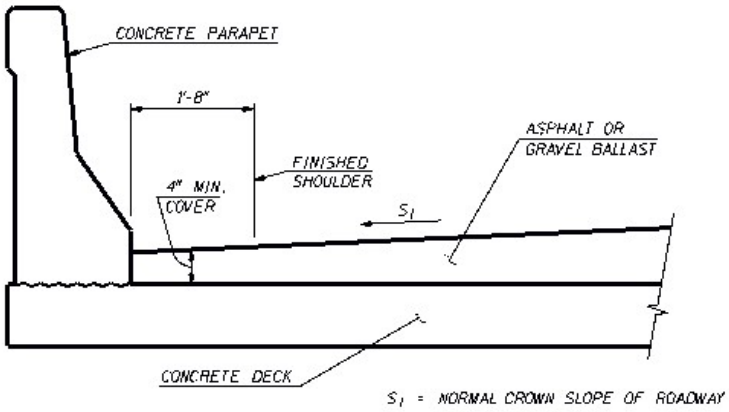

Staked Concrete Shoulder Barrier – Standard Drawing G-2-A-1

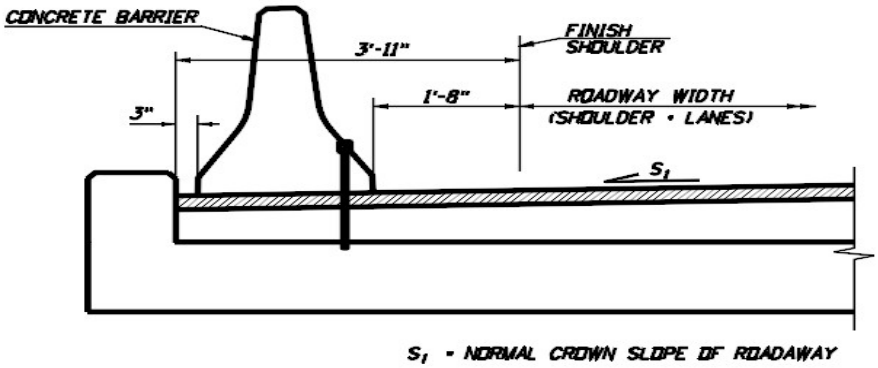

MSE WALLS

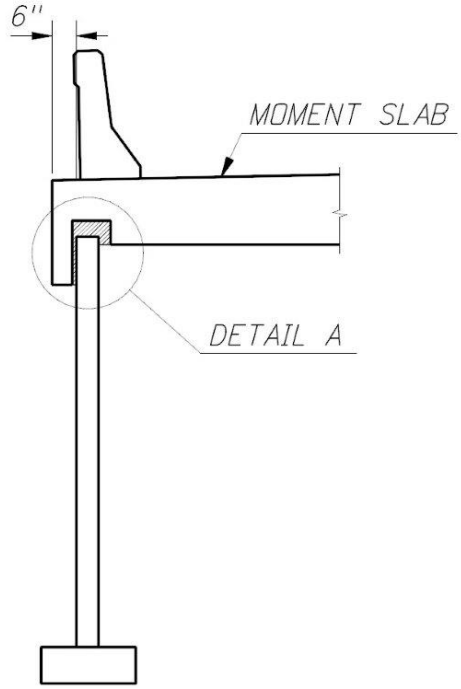
6"
MOMENT SLAB
DETAIL A

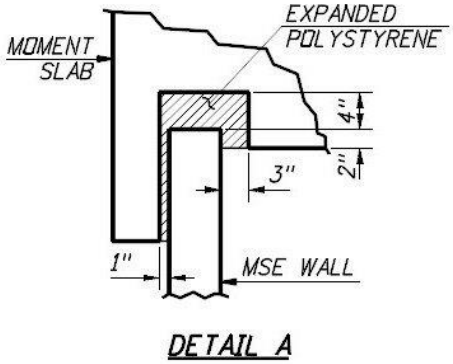
EXPANDED POLYSTYRENE
MOMENT SLAB
4"
2"
3"
1"
MSE WALL
DETAIL A

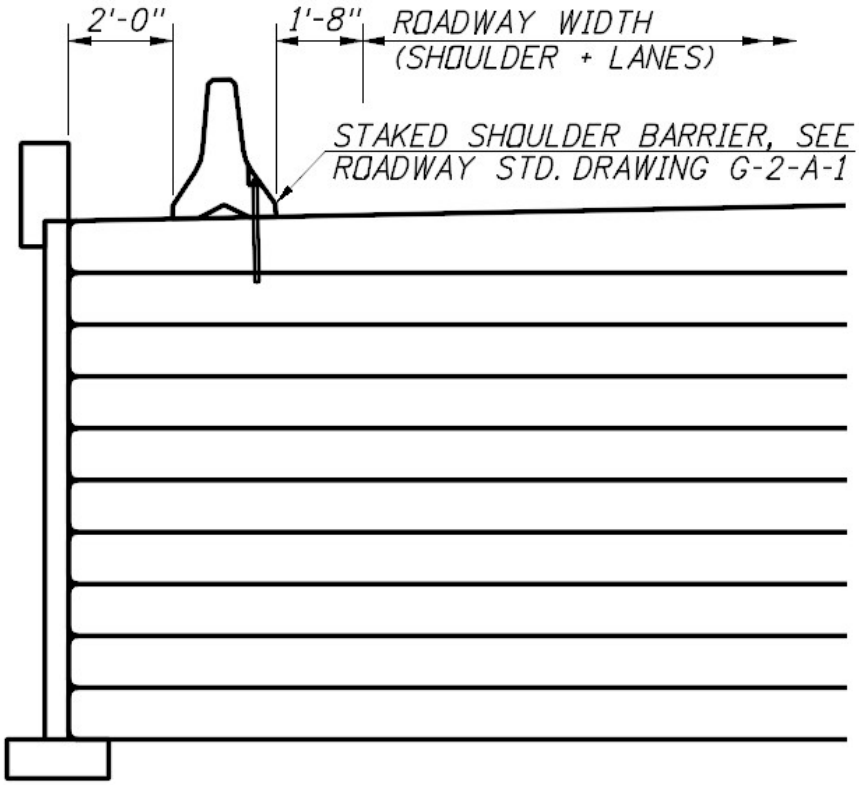
2'-0"
1'-8"
ROADWAY WIDTH
(SHOULDER + LANES)
STAKED SHOULDER BARRIER, SEE
ROADWAY STD. DRAWING G-2-A-1

MSE WALLS

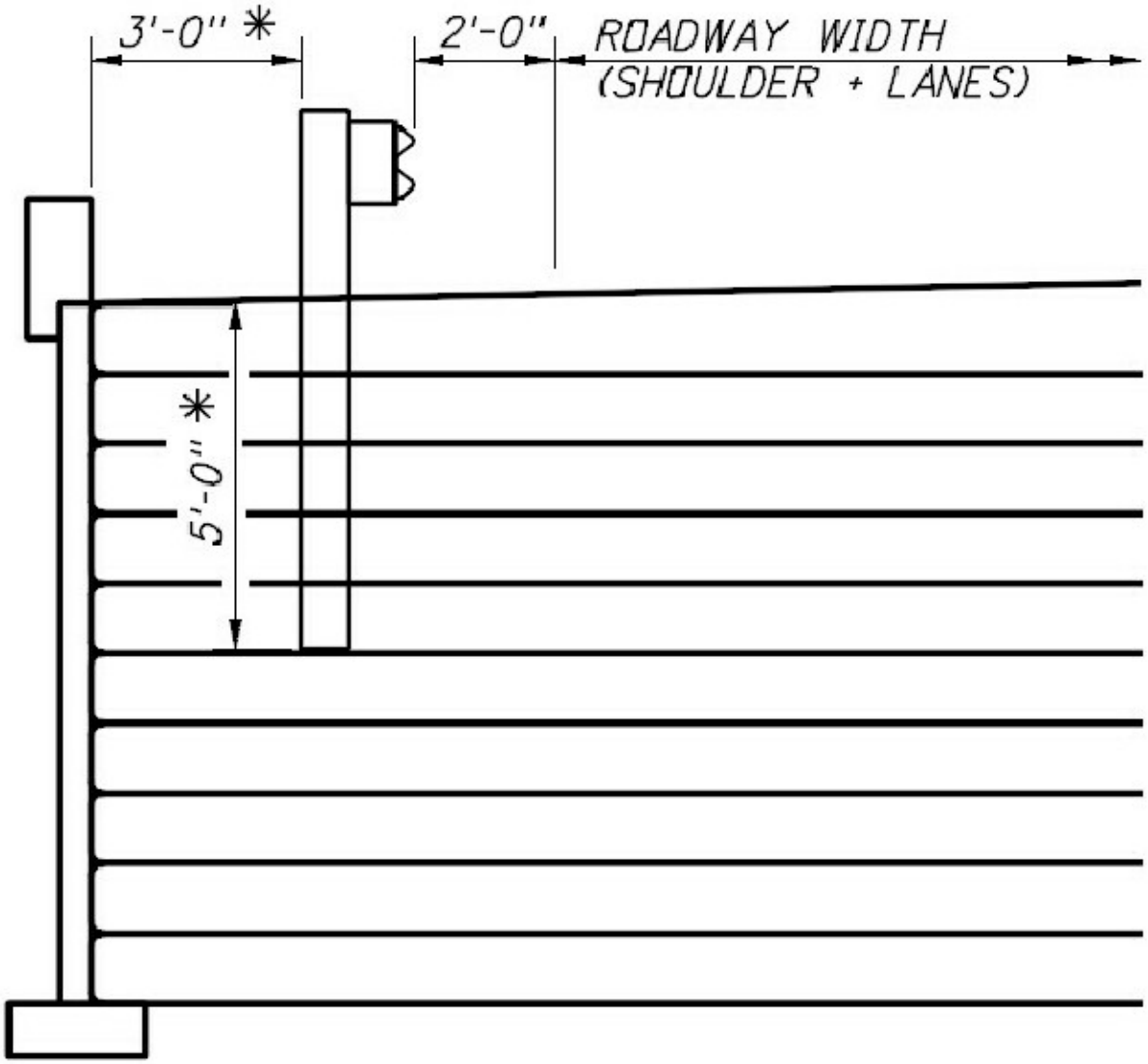

* AASHTO LRFD BRIDGE DESIGN SPECIFICATIONS
ARTICLE 11.10.10.2