IDAHO TRANSPORTATION DEPARTMENT

MATERIALS LAB MODIFICATION

DISTRICT 5

5151 S. 5th Avenue
Pocatello, Idaho 83442

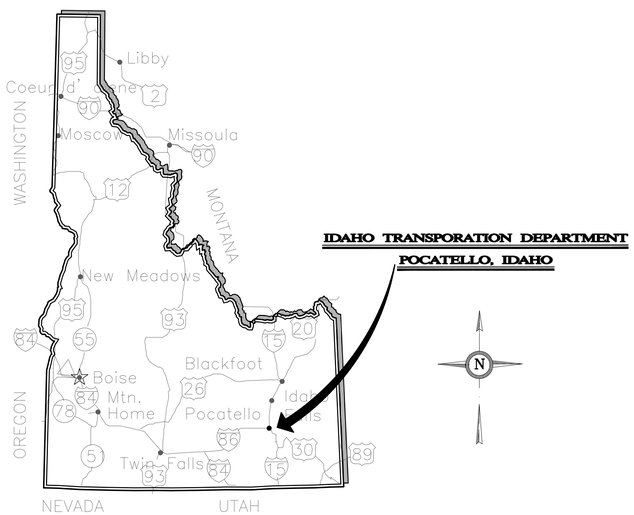

INDEX OF DRAWINGS

SHEET	DESCRIPTION
G0.0	Project Title Sheet
E0.0	Electrical Title Sheet
E1.0	Materials Lab Mechanical Power Plan
M0.0	Mechanical Title Sheet
M1.0	Materials Lab Mechanical Floor Plan
M2.0	Materials Lab Mechanical Roof Plan
M3.0	Mechanical Details
M3.1	Mechanical Details
M4.0	Mechanical Details & Schedules

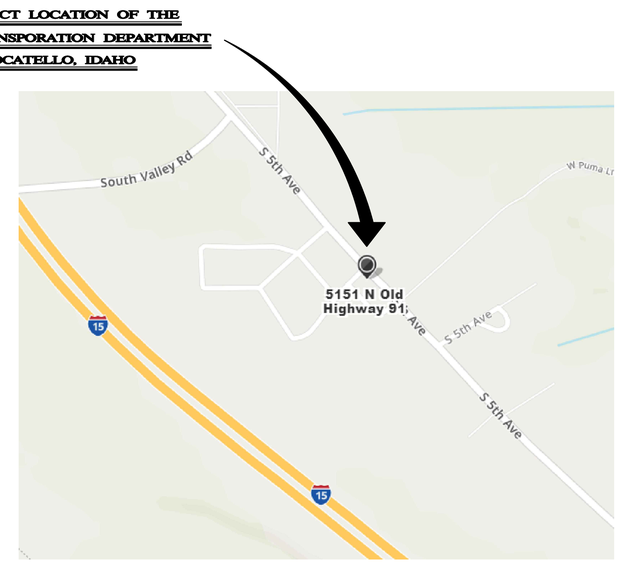

Pocatello, Idaho

Partial Vicinity Map

no scale

Pocatello, Idaho

ITD Campus Map

no scale

NO.	REVISIONS	DATE

PROFESSIONAL ENGINEER
LICENSED
16683
10/26/2020
STATE OF IDAHO
CHRISTOPHER DYKE

MUSGROVE
ENGINEERING, P.A.
234 S. Whisperwood Way
Boise, Idaho 83709
208.384.0585
musgrovepa.com
OVER 40 YEARS OF EXCELLENCE

IDAHO TRANS. DEPT.
MATERIALS LAB MODIFICATION
5151 S 5TH AVE.
POCATELLO, IDAHO

PROJECT	20-229
DRAWN	CD
CHECKED	TN
DATE	20-10-22
SCALE	SEE PLANS
SHEET	G0.0

DEVICES

S	SWITCH, TYPE AS INDICATED. +46"AFF
	2 DOUBLE POLE
	3 3-WAY
	4 4-WAY
	K KEYED
	P PILOT LIGHT
	D DIMMER
	HP HORSEPOWER RATED
	TO THERMAL OVERLOAD
	LV LOW VOLTAGE
	OS OCCUPANCY SENSOR
	OR LOW VOLTAGE, MOMENTARY OVERRIDE
	VS VACANCY SENSOR
	a SUPERSCRIPT INDICATES LIGHTS TO BE SWITCHED TOGETHER
$	DUAL LEVEL SWITCHING, INSIDE AND OUTSIDE LAMPS OF FIXTURE TO BE SWITCHED SEPARATELY.
$	DUAL LEVEL SWITCHING WITH OCCUPANCY SENSOR, INSIDE AND OUTSIDE LAMPS OF FIXTURE TO BE SWITCHED SEPARATELY.
S	OCCUPANCY SENSOR WITH MANUAL DIMMING, SET FOR 50% AUTOMATIC ON, AUTOMATIC OFF, WITH MANUAL DIMMING.
	SINGLE CONVENIENCE OUTLET, +18" AFF UNO
	FLOOR MOUNT SINGLE CONVENIENCE OUTLET
	DUPLEX CONVENIENCE OUTLET, +18" AFF UNO
	FLOOR MOUNT DUPLEX CONVENIENCE OUTLET
	EMERGENCY DUPLEX CONVENIENCE OUTLET, +18" AFF UNO
	SWITCHED DUPLEX CONVENIENCE OUTLET, +18" AFF UNO
	FLOOR MOUNTED SWITCHED DUPLEX CONVENIENCE OUTLET
	USB DUPLEX CONVENIENCE OUTLET, +18" AFF UNO
	USB FOURPLEX CONVENIENCE OUTLET, +18" AFF UNO
	FOURPLEX CONVENIENCE OUTLET. +18"AFF UNO
	FLOOR MOUNT FOURPLEX CONVENIENCE OUTLET
	CONNECTION POINT TO EQUIPMENT SPECIFIED, ELECTRICAL CONTRACTOR TO SUPPLY RACEWAY AND CONDUCTORS AND MAKE FINAL CONNECTION TO EQUIPMENT UNDER THIS SECTION. UNO
	FLOOR MOUNTED CONNECTION POINT, SEE NOTE ABOVE FOR REQUIREMENTS
	FLOOR MOUNTED JUNCTION BOX
	JUNCTION BOX
	WALL MOUNTED PUSH BUTTON, MOUNT AT SWITCH HEIGHT UNO
HC	WALL MOUNTED PUSH BUTTON, HANDICAPPED MOUNT AT SWITCH HEIGHT UNO
	WALL MOUNTED PUSH BUTTON, MOUNT AT SWITCH HEIGHT UNO
	MOTOR STARTER/CONTACTOR, SIZE/POLES NEMA 1 UNO AS INDICATED
	COMBINATION STARTER AND DISCONNECT, SIZE/POLES, STARTER SIZE AS INDICATED, NEMA 1 UNO
F	FUSED DISCONNECT SWITCH, SIZE/POLES, FUSE SIZES AS INDICATED, NEMA 1 UNO
	NON-FUSED DISCONNECT SIZE/ POLES AS INDICATED, NEMA 1 UNO
T X-X	THERMOSTAT, +46" AFF PROVIDE CONDUIT, J-BOX, CONDUCTORS AS REQUIRED TO CONTROL ASSOCIATED UNITS. UNO COORDINATE WITH DIVISION 15.
	POWER POLE - DUAL CHANNEL
T	TRANSFORMER
	PANELBOARD. SEE SCHEDULE FOR TYPE.
	EQUIPMENT CABINET, SURFACE MOUNTED
	EQUIPMENT CABINET FLUSH MOUNTED
	SURFACE MULTI-OUTLET RACEWAY
# # # #	MECHANICAL EQUIPMENT CALL OUT
#	KITCHEN EQUIPMENT CALLOUT

CIRCUITING SYMBOLS

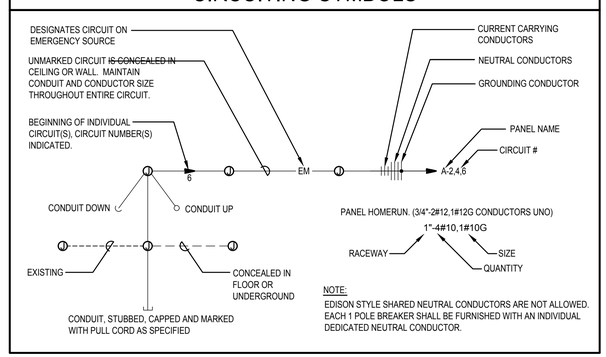

NOTE:
EDISON STYLE SHARED NEUTRAL CONDUCTORS ARE NOT ALLOWED. EACH 1 POLE BREAKER SHALL BE FURNISHED WITH AN INDIVIDUAL DEDICATED NEUTRAL CONDUCTOR.

ELECTRICAL ABBREVIATIONS

A	AMPERES
AC	6" ABOVE BACKSPLASH
AFF	ABOVE FINISHED FLOOR
AFG	ABOVE FINISHED GRADE
AF	AMP FRAME
AIC	AMPS INTERRUPTING CAPACITY
AT	AMP TRIP
ATS	AUTOMATIC TRANSFER SWITCH
AWG	AMERICAN WIRE GAUGE
BD	BOTTOM OF DECK
BS	BOTTOM OF STRUCTURE
C	CEILING MOUNTED
C	CONDUIT
CB	CIRCUIT BREAKER
CF	COMPACT FLUORESCENT
CKT	CIRCUIT
CO	CONDUIT ONLY, PROVIDE PULL-LINE
CT	CURRENT TRANSFORMER
CTL	CONTROL
DC	DIRECT CURRENT
(D)	DEMOLITION
DEMO	DEMOLITION
DET	DETAIL
DTT	DOUBLE TWIN TUBE
E	EMERGENCY
(E)	EXISTING
EC	ELECTRICAL CONTRACTOR
EL	EMERGENCY LIGHT
F	FUSE
(F)	FUTURE
FACP	FIRE ALARM CONTROL PANEL
G/GND	GROUND
GFCI	GROUND FAULT CIRCUIT INTERRUPTER
GFI	GROUND FAULT INTERRUPTER
HH	HAND HOLE
HID	HIGH INTENSITY DISCHARGE
HOA	HAND-OFF-AUTO
HPS	HIGH PRESSURE SODIUM
HVAC	HEATING, VENTILATION, & AIR CONDITIONING
IG	ISOLATED GROUND
IPCO	IDAHO POWER COMPANY
J-BOX	JUNCTION BOX
KA	KILOAMP
KVA	KILO VOLT-AMP
KW	KILOWATT
KWH	KILOWATT HOUR
LCP	LIGHTING CONTROL PANEL
MB	MAIN BREAKER
MBR	MAIN CIRCUIT BREAKER
MCC	MOTOR CONTROL CENTER
MDP	MAIN DISTRIBUTION PANEL
MLO	MAIN LUGS ONLY
MMC	MODULAR METERING CENTER
MH	METAL HALIDE
MSB	MAIN SWITCH BOARD
MTG	MOUNTING
N	NEUTRAL
(N)	NEW
NC	NORMALLY CLOSED
NEC	NATIONAL ELECTRICAL CODE
NIC	NOT IN CONTRACT
NL	NIGHT LIGHT
NO	NORMALLY OPEN
NTS	NOT TO SCALE
OH	OVERHEAD
OS	OCCUPANCY SENSOR
P	POLES
PC	PHOTO-CONTROL
PVC	POLYVINYL CHLORIDE
PWR	POWER
RE:	REFERENCE
REC	RECEPTACLE
(R)	RELOCATED
SF	SQUARE FEET
TBD	TO BE DETERMINED
TDR	TIME DELAY RELAY
TK	TOE KICK
TSP	TWISTED SHIELDED PAIR
TRT	TRIPLE TUBE
TTB	TELEPHONE TERMINAL BOARD
(TYP.)	TYPICAL
UC	UNDERCABINET
UG	UNDERGROUND
U.N.O.	UNLESS NOTED OTHERWISE
V	VOLT
VA	VOLT-AMPERE
W	WATT
WG	WIRE GUARD
WP	WEATHER PROOF/NEMA 3R
PROVIDED/ PROVIDE BY INSTALLED/ INSTALL	PROVIDE AND INSTALL / PROVIDED AND INSTALLED BY / PROVIDE AND INSTALL

NOTE: THIS IS A STANDARD LIST OF COMMONLY USED ELECTRICAL ABBREVIATIONS. SOME OF THE ABBREVIATIONS SHOWN ABOVE MAY NOT BE USED IN THIS DRAWING PACKAGE.

ELECTRICAL GENERAL NOTES

A. THESE ELECTRICAL DRAWINGS ARE DIAGRAMMATIC IN NATURE; THEREFORE, THE ELECTRICAL CONTRACTOR SHALL COORDINATE ALL ELECTRICAL EQUIPMENT AND DEVICE LOCATIONS WITH ARCHITECTURAL, MECHANICAL, AND PLUMBING DIVISIONS PRIOR TO ROUGH-IN. REFER TO AND COORDINATE WITH ARCHITECTURAL, MECHANICAL, AND PLUMBING DRAWINGS FOR ADDITIONAL WORK THAT IS REQUIRED BY THE ELECTRICAL CONTRACTOR.

B. ALL CONDUIT AND JUNCTION BOXES ARE TO BE CONCEALED UNLESS LOCATED WITHIN DEDICATED ELECTRICAL OR MECHANICAL ROOMS. USE OF SURFACE MOUNTED RACEWAYS IN ALL OTHER SPACES MUST BE APPROVED BY THE ARCHITECT FOR EACH LOCATION. WHERE SURFACE RACEWAYS ARE APPROVED, UTILIZE WIREMOLD, OR APPROVED EQUAL. SURFACE MOUNTED RACEWAYS PAINTED TO MATCH SURROUNDING WALLS.

C. REFER TO ARCHITECTURAL ELEVATIONS FOR OUTLET HEIGHTS WHERE THE SPECIFIC OUTLET HEIGHT IS NOT INDICATED. REFER TO THE ELECTRICAL LEGEND FOR THE DEFAULT OUTLET HEIGHT WHEN NOT INDICATED ON ELEVATIONS OR ON AT THE DEVICES.

D. PROVIDE PULL-LINE IN ALL EMPTY CONDUITS.

E. TERMINATE ALL LOW-VOLTAGE CONDUITS WITH INSULATED THROAT BUSHING.

F. MECHANICAL EQUIPMENT INDICATED IS SHOWN IN AN APPROXIMATE LOCATION. COORDINATE EXACT LOCATION WITH MECHANICAL CONTRACTOR PRIOR TO ROUGH-IN.

DEMO:

G. THE ELECTRICAL DEMOLITION DRAWING(S) PROVIDED ARE INTENDED TO ASSIST THE ELECTRICAL CONTRACTOR IN ESTABLISHING AREAS REQUIRING DISCONNECTION, REMOVAL, OR RELOCATION OF ELECTRICAL EQUIPMENT, OUTLETS, WIRING, DEVICES, FIXTURES, ETC. AND MAY NOT INDICATE ALL DEVICES OR THE FULL EXTENT OF DEMOLITION AND RECONNECTION WHICH MAY BE REQUIRED. THE ELECTRICAL CONTRACTOR SHALL VISIT THE JOB SITE AND THOROUGHLY EXAMINE ALL REQUIRED DEMOLITION WORK AND INCLUDE ALL LABOR AND INCIDENTALS THAT WILL BE NECESSARY TO PERFORM DEMOLITION RECONNECTION AND TEMPORARY POWER CONNECTIONS IN THE BID.

H. ALL ELECTRICAL DEVICES AND WALLS INDICATED ON THE ELECTRICAL DEMOLITION DRAWING(S) ARE TO REMAIN UNLESS OTHERWISE NOTED.

SHEET INDEX

E0.0	ELECTRICAL COVER SHEET
E1.0	MATERIALS LAB MECHANICAL POWER PLAN

LEGEND IS GENERAL IN NATURE. NOT ALL OF THE SYMBOLS SHOWN ARE USED IN THIS PROJECT.

NOTE: THIS IS A STANDARD LIST OF COMMONLY USED ELECTRICAL SYMBOLS. SOME OF THE SYMBOLS SHOWN MAY NOT HAVE BEEN USED IN THIS DRAWING PACKAGE.

NO.	REVISIONS	DATE

PROFESSIONAL ENGINEER
REGISTERED
13299
10/23/2020
STATE OF IDAHO
MATTHEW N. BRADLEY

MUSGROVE
ENGINEERING, P.A.
234 S. Whisperwood Way
Boise, Idaho 83709
208.384.0585
musgrovepa.com
OVER 40 YEARS OF EXCELLENCE

IDAHO TRANS. DEPT.
MATERIALS LAB MODIFICATION
5151 S 5TH AVE.
POCATELLO, IDAHO

PROJECT	20-229
DRAWN	DH
CHECKED	MB
DATE	20-08-21
SCALE	SEE PLANS
SHEET	E0.0

PANEL:	LB32 (EXISTING)	PROJECT:	IDAHO TRANSPORTATION DEPARTMENT MATERIALS LAB MODIFICATION - POCATELLO		
VOLTAGE:	208Y/120	3 PH	4 WIRE	AMPERE RATING: 250 MBR	SC RATING:
CKT NOTES:				REMARKS:	MOUNTING: SURFACE
1. RED HANDLE, LOCKABLE BREAKER		5. EXISTING BREAKER			
2. GFCI FOR PERSONNEL PROTECTION (5mA)					
3. GFEP FOR EQUIPMENT PROTECTION (30mA)					
4. AFCI COMBINATION STYLE BREAKER					

CKT	DESCRIPTION	CKT NOTE	LOAD AMPS	AMPS/ POLES		PHASE (AMPS) A	B	C	AMPS/ POLES		LOAD AMPS	CKT NOTE	DESCRIPTION	CKT
40	OVEN	5		30	2	0			20	2		5	SPARE	39
38	***	5		**	*		0		**	*		5	***	37
36	OUTLET BELOW	5		30	2			0	30	2		5	SPARE	35
34	***	5		**	*	0			**	*		5	***	33
32	AGG OVEN ROOM LARGE OVEN NW	5		60	2		0		??	1		5	SPARE	31
30	***	5		**	*			0	**	1		5	***	29
28	FAN COIL UNIT ROOM 32 OR SPARE?	5		20	1	0			??	1		5	SPARE	27
26	FAN COIL UNIT MATERIAL LAB ROOM 31	5		20	1		0		**	1		5	***	25
24	ISLAND REC	5		20	1			0	20	1		5	??	23
22	ISLAND REC	5		20	1	0			50	1		5	50A TRAILER PLUG	21
20	ISLAND REC	5		20	1		0		**	1		5	**	19
18	ISLAND REC	5		20	1			0	20	1		5	??	17
16	??	5		20	1	0			??	1		5	240V HEATER NUCLEAR STORAGE RM	15
14	??	5		20	1		0		**	1		5	***	13
12	NCAT BOTTOM RT S WALL	5		30	2			0	20	1		5	NECLEAR RECEPT STOR ROOM	11
10	***	5		**	*	0			20	1		5	NUCLEAR LIGHTS STOR RM	9
8	NCAT TOP WEST S WALL	5		30	2		0		20	1		5	ASPHALT MIX ROOM MICROWAVE OUTLE	7
6	***	5		**	*			0	20	1		5	??	5
4	??	5		60	1	0			20	1		5	??	3
2	***	5		**	1		0		20	1		5	EXHAUST FAN NCATS	1
						0.0	0.0	0.0	AMPS					
						0.0	0.0	0.0	KW			0	TOTAL KW	

PANEL:	LB32 (REVISED)	PROJECT:	IDAHO TRANSPORTATION DEPARTMENT MATERIALS LAB MODIFICATION - POCATELLO		
VOLTAGE:	208Y/120	3 PH	4 WIRE	AMPERE RATING: 250 MBR	SC RATING:
CKT NOTES:				REMARKS:	MOUNTING: SURFACE
1. RED HANDLE, LOCKABLE BREAKER		5. EXISTING BREAKER		EXISTING SQUARE D QO PANEL	
2. GFCI FOR PERSONNEL PROTECTION (5mA)				CONTRACTOR TO TRACE ALL CIRCUITS AND PROVIDE UPDATED, TYPEWRITTEN	
3. GFEP FOR EQUIPMENT PROTECTION (30mA)				SCHEDULE	
4. PROVIDE NEW BREAKER					

CKT	DESCRIPTION	CKT NOTE	LOAD AMPS	AMPS/ POLES		PHASE (AMPS) A	B	C	AMPS/ POLES		LOAD AMPS	CKT NOTE	DESCRIPTION	CKT
40	OVEN	5		30	2	0			15	3		4	MAU-1	39
38	***	4		**	*		0		**	*		4		37
36	OUTLET BELOW	5		30	2			0	**	*		4		35
34	***	5		**	*	0			20	1		4	EXHAUST FAN EF-2	33
32	AGG OVEN ROOM LARGE OVEN NW	5		60	2		0		??	1		5	SPARE	31
30	***	5		**	*			0	**	1		5	***	29
28	FCU RM 32 OR SPARE/ FCU MAT LAB 31			20/20	1	0			??	1		5	SPARE	27
26	ISLAND REC/ ISLAND REC			20/20	1		0		**	1		5	***	25
24	ISLAND REC/ ISLAND REC			20/20	1			0	20	1		5	??	23
22	EXHAUST FAN EF-1	4	11.0	20	1	11			50	1		5	50A TRAILER PLUG	21
20		4	11.0	**	1		11		**	1		5	**	19
18		4	11.0	**	1			11	20	1		5	EXISTING	17
16	EXISTING	5		20	1	0			??	1		5	240V HEATER NUCLEAR STORAGE RM	15
14	EXISTING	5		20	1		0		***	1		5	***	13
12	NCAT BOTTOM RT S WALL	5		30	2			0	20	1		5	NECLEAR RECEPT STOR ROOM	11
10	***	5		**	*	0			20	1		5	NUCLEAR LIGHTS STOR RM	9
8	NCAT TOP WEST S WALL	5		30	2		0		20	1		5	ASPHALT MIX ROOM MICROWAVE OUTLE	7
6	***	5		**	*			0	20	1		5	EXISTING	5
4	EXISTING	5		60	1	0			20	1		5	EXISTING	3
2	***	5		**	1		0		20	1		5	EXHAUST FAN NCATS	1
						11.0	11.0	11.0	AMPS					
						1.3	1.3	1.3	KW			3.96	TOTAL KW	

PANEL:	HVAC-0 (EXISTING)	PROJECT:	IDAHO TRANSPORTATION DEPARTMENT MATERIALS LAB MODIFICATION - POCATELLO		
VOLTAGE:	208Y/120	3 PH	4 WIRE	AMPERE RATING: 250 MBR	SC RATING:
CKT NOTES:				REMARKS:	MOUNTING: SURFACE
1. RED HANDLE, LOCKABLE BREAKER		5. EXISTING BREAKER			
2. GFCI FOR PERSONNEL PROTECTION (5mA)					
3. GFEP FOR EQUIPMENT PROTECTION (30mA)					
4. AFCI COMBINATION STYLE BREAKER					

CKT	DESCRIPTION	CKT NOTE	LOAD AMPS	AMPS/ POLES		PHASE (AMPS) A	B	C	AMPS/ POLES		LOAD AMPS	CKT NOTE	DESCRIPTION	CKT
1	HP-1	5		50	2	0			20	2		5	COMPUTER RM WINDOW AIR COND 220V	2
3	***	5		**	*		0		**	*		5	***	4
5	CU-1	5		40	2			0	30	2		5	COMPUTER RM AC UNIT	6
7	***	5		**	*	0			**	*		5	***	8
9	BREAK ROOM MICROWAVE	5		20	1		0		20	1		5	120 TO COMP ROOM	10
11	BREAK ROOM MICROWAVE	5		20	1			0	20	1		5	GAS HEATER	12
13	OFFICE REC NORTH OF BREAK ROOM	5		20	1	0			20	1		5	SPARE	14
15	BREAK ROOM NORTH WALL (WEST REC)	5		20	1		0		20	1		5	??	16
17	GLYCOL FEED RECEP	5		20	1			0	20	1		5	ASPHALT LAB FANS	18
19	AIR DRYER	5		20	1	0			20	1		5	ASPHALT LAB FANS	20
21	S WEST OUTLET	5		20	1		0		20	1		5	NE WEST OUTLET	22
23	BLANK				1			0	20	1		5	COUNTER DUPLEX OUTLET	24
25	BLANK				1	0			25	2		5	HEATER OFFICE #24	26
27	BLANK				1		0		**	*		5	***	28
29	BLANK				1			0	**	*			BLANK	30
31	BLANK				1	0				1			BLANK	32
33	BLANK				1		0			1			BLANK	34
35	BLANK				1			0		1			BLANK	36
37	BLANK				1	0				1			BLANK	38
39	BLANK				1		0			1			BLANK	40
								0						
						0.0	0.0	0.0	AMPS					
						0.0	0.0	0.0	KW			0	TOTAL KW	

PANEL:	HVAC-0 (REWORKED)	PROJECT:	IDAHO TRANSPORTATION DEPARTMENT MATERIALS LAB MODIFICATION - POCATELLO		
VOLTAGE:	208Y/120	3 PH	4 WIRE	AMPERE RATING: 250 MBR	SC RATING:
CKT NOTES:				REMARKS:	MOUNTING: SURFACE
1. RED HANDLE, LOCKABLE BREAKER		5. EXISTING BREAKER		EXISTING SQUARE D QO PANEL	
2. GFCI FOR PERSONNEL PROTECTION (5mA)				CONTRACTOR TO TRACE ALL CIRCUITS AND PROVIDE UPDATED, TYPEWRITTEN	
3. GFEP FOR EQUIPMENT PROTECTION (30mA)				SCHEDULE	
4. PROVIDE NEW BREAKER					

CKT	DESCRIPTION	CKT NOTE	LOAD AMPS	AMPS/ POLES		PHASE (AMPS) A	B	C	AMPS/ POLES		LOAD AMPS	CKT NOTE	DESCRIPTION	CKT
1	HP-1	5		50	2	0			20	2		5	COMPUTER RM WINDOW AIR COND 220V	2
3	***	5		**	*		0		**	*		5	***	4
5	CU-1	5		40	2			0	30	2		5	COMPUTER RM AC UNIT	6
7	***	5		**	*	0			**	*		5	***	8
9	BREAK ROOM MICROWAVE	5		20	1		0		20	1		5	120 TO COMP ROOM	10
11	BREAK ROOM MICROWAVE	5		20	1			0	20	1		5	GAS HEATER	12
13	OFFICE REC NORTH OF BREAK ROOM	5		20	1	0			20	1		5	SPARE	14
15	BREAK ROOM NORTH WALL (WEST REC)	5		20	1		0		20	1		5	??	16
17	GLYCOL FEED RECEP	5		20	1			0	20	1		5	ASPHALT LAB FANS	18
19	AIR DRYER	5		20	1	0			20	1		5	ASPHALT LAB FANS	20
21	S WEST OUTLET	5		20	1		0		20	1		5	NE WEST OUTLET	22
23	BLANK				1			0	20	1		5	COUNTER DUPLEX OUTLET	24
25	BLANK				1	0			25	2		5	HEATER OFFICE #24	26
27	BLANK				1		0		**	*		5	***	28
29	BLANK				1			0	**	*			BLANK	30
31	BLANK				1	0				1			BLANK	32
33	BLANK				1		0			1			BLANK	34
35	RP-1	4	0.1	20	1			0.092		1			BLANK	36
37	WATER HEATER	4	2.0	30	2	2				1			BLANK	38
39	***	4	2.0	**	*		2			1			BLANK	40
						2.0	2.0	0.1	AMPS					
						0.2	0.2	0.0	KW			0.49	TOTAL KW	

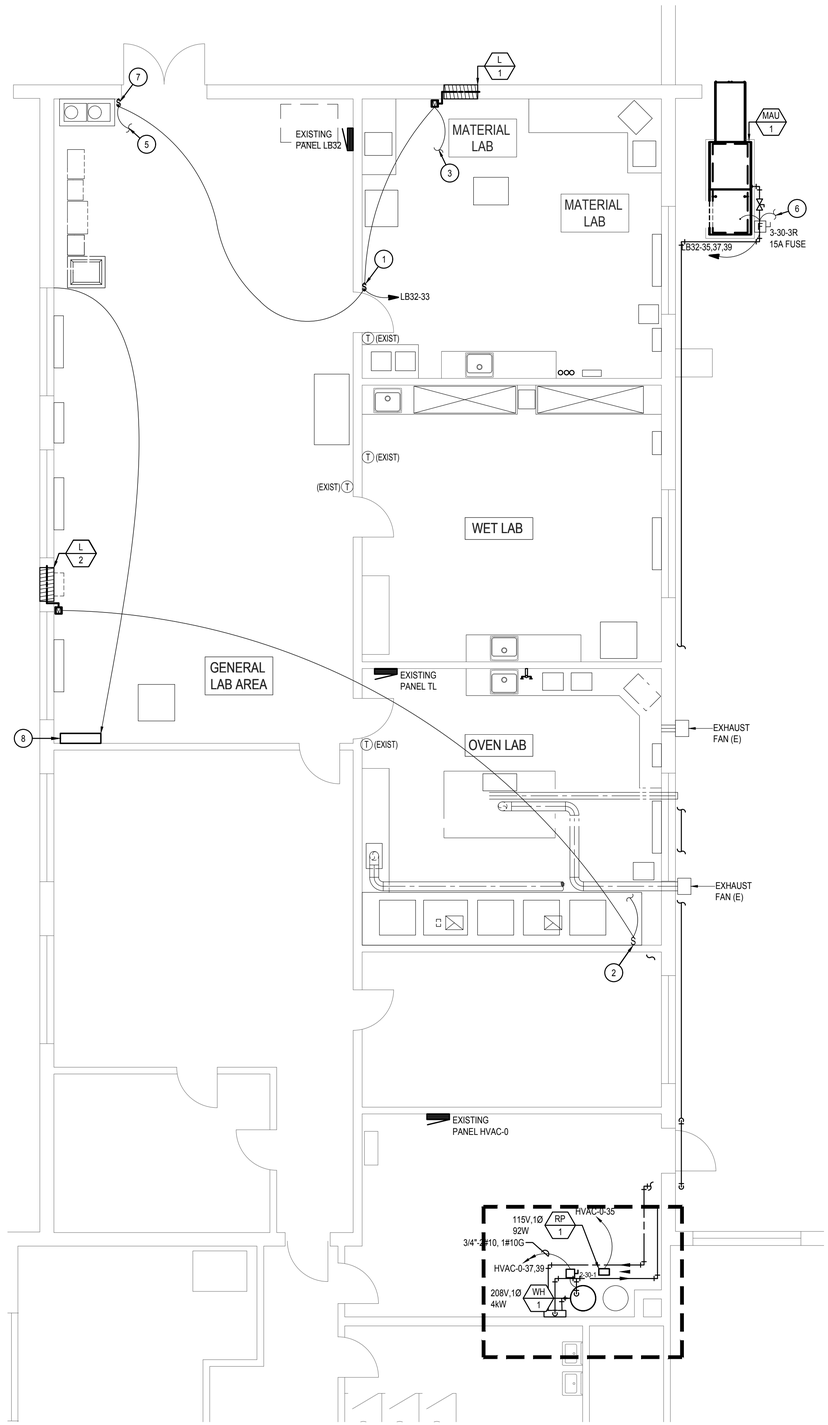

MATERIALS LAB MECHANICAL POWER PLAN

3/16" = 1'-0"

NORTH

KEYED NOTES:

(#) SYMBOL USED FOR NOTE CALLOUT.

1. INTERLOCK EXHAUST FAN EF-2 WITH LOUVER L-1 FROM WALL SWITCH.
2. 3/4"C 2#12,1#12G INTERLOCK LOUVER L-2 WITH EXISTING EXHAUST HOOD SWITCH. CONNECT TO EXISTING CIRCUIT.
3. 3/4"C 2#12,1#12G DOWN / UP TO EXHAUST FAN EF-2.
4. SIZE 1 COMBINATION MOTOR STARTER DISCONNECT WITH 120 VOLT CONTROL VOLTAGE. INTERLOCK EF-1, MAU-1 AND L-1.
5. 3/4"C 2#12,1#12G INTERLOCK DOWN /UP TO SWITCH AND L-1.
6. 3/4"C 2#12,1#12G INTERLOCK DOWN/UP TO MAU-1.
7. INTERLOCK EF-1, MAU-1 AND L-1 FROM WALL SWITCH.
8. RELOCATE EXISTIG WALL HEATER AND BRACH CIRCUIT TO LOCATION SHOWN.

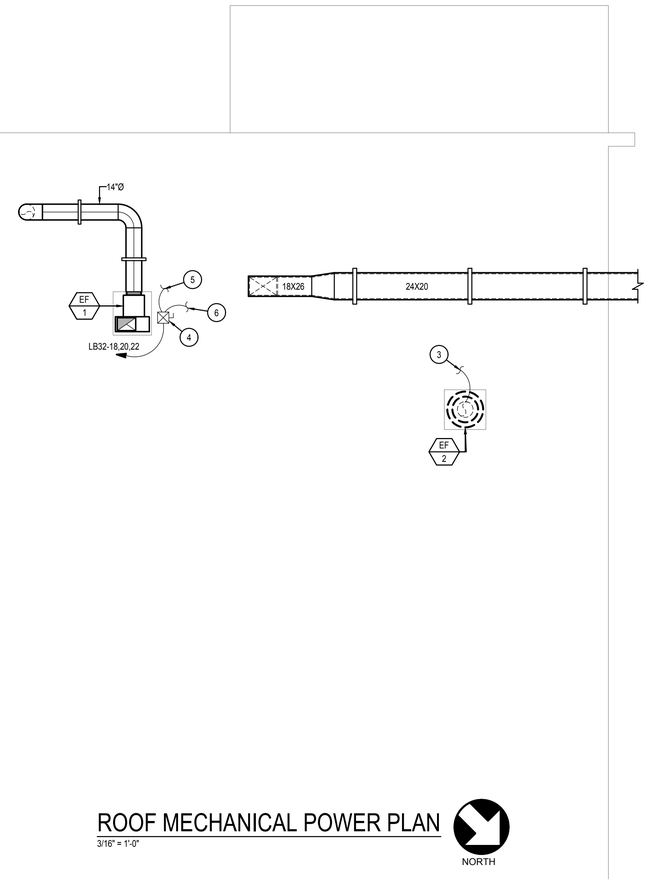

ROOF MECHANICAL POWER PLAN

3/16" = 1'-0"

NORTH

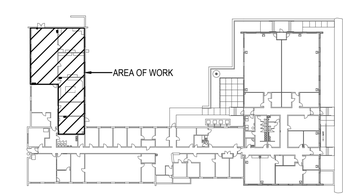

ITD POCATELLO KEY PLAN

NTS

NORTH

NO.	REVISIONS	DATE

PROFESSIONAL ENGINEER REGISTERED 13299 10/23/2020 STATE OF IDAHO MATTHEW N. BRADLEY

MUSGROVE ENGINEERING, P.A.
234 S. Whisperwood Way
Boise, Idaho 83709
208.384.0585
musgrovepa.com
OVER 40 YEARS OF EXCELLENCE

IDAHO TRANS. DEPT.
MATERIALS LAB MODIFICATION
5151 S 5TH AVE.
POCATELLO, IDAHO

PROJECT	20-229
DRAWN	DH
CHECKED	MB
DATE	20-08-21
SCALE	SEE PLANS
SHEET	E1.0

MECHANICAL ABBREVIATIONS

A/C or AC	AIR CONDITIONING	KW	KILOWATT
AFF	ABOVE FINISHED FLOOR	KWH	KILOWATT HOUR
AHU	AIR HANDLING UNIT		
ASHRAE	AMERICAN SOCIETY OF HEATING, REFRIGERATION, AND AIR CONDITIONING ENGINEERS	LAT	LEAVING AIR TEMPERATURE
		LAV	LAVATORY
BTU	BRITISH THERMAL UNITS	LEED	LEADERSHIP IN ENERGY AND ENVIRONMENTAL DESIGN
BTUH	BTUS PER HOUR	LWT	LEAVING WATER TEMPERATURE
CA	COMBUSTION AIR	MAX	MAXIMUM
CC	COOLING COIL	MCA	MINIMUM CIRCUIT AMPS
CFM	AIR FLOW RATE (CUBIC FEET PER MINUTE)	MOCP	MAXIMUM OVERCURRENT PROTECTION
CHWR	CHILLED WATER RETURN	MIN	MINIMUM
CHWS	CHILLED WATER SUPPLY		
CLG	CEILING	NC	NOISE CRITERIA
CW	COLD WATER	NFPA	NATIONAL FIRE PROTECTION ASSOCIATION
		NTS	NOT TO SCALE
DEG or °	DEGREE		
DIA or Ø	DIAMETER	OSA	OUTSIDE AIR
DB	DRY BULB		
		PD	PRESSURE DROP
EA	EXHAUST AIR	PH or Ø	PHASE
EAT	ENTERING AIR TEMPERATURE	PRV	PRESSURE REDUCING VALVE
EER	ENERGY EFFICIENCY RATIO		
ESP	EXTERNAL STATIC PRESSURE	RA	RETURN AIR
EWT	ENTERING WATER TEMPERATURE	RPM	REVOLUTIONS PER MINUTE
		RTU	ROOFTOP UNIT
FCO	FLOOR CLEANOUT		
FD	FIRE DAMPER	SA	SUPPLY AIR
FLA	FULL LOAD AMPS	SEER	SEASONAL ENERGY EFFICIENCY RATIO
FLR	FLOOR	SFD	COMBINATION SMOKE/FIRE DAMPER
FPM	FEET PER MINUTE	SP	STATIC PRESSURE
FT	FEET	SYM	SYMBOL
GA	GAUGE	T & P	TEMPERATURE AND PRESSURE
GCO	GRADE CLEANOUT	TEMP	TEMPERATURE
GPM	WATER FLOW RATE (GALLONS PER MINUTE)	TYP	TYPICAL
HC	HEATING COIL	UMC	UNIFORM MECHANICAL CODE
HP	HORSE POWER	UPC	UNIFORM PLUMBING CODE
HVAC	HEATING, VENTILATING, AIR CONDITIONING	URL	URINAL
HW	HOT WATER		
HWR	HOT WATER RETURN	VTR	VENT THROUGH ROOF
HWS	HOT WATER SUPPLY	V	VOLTS
IBC	INTERNATIONAL BUILDING CODE	W/	WITH
IEEC	INTERNATIONAL ENERGY CONSERVATION CODE	WB	WET-BULB
IFC	INTERNATIONAL FIRE CODE	WC	WATER CLOSET
IFGC	INTERNATIONAL FUEL GAS CODE	WCO	WALL CLEANOUT
IMC	INTERNATIONAL MECHANICAL CODE	WH	WATER HEATER
IPC	INTERNATIONAL PLUMBING CODE		

NOTE: THIS IS A STANDARD LIST OF COMMONLY USED MECHANICAL ABBREVIATIONS. SOME OF THE ABBREVIATIONS SHOWN ABOVE MAY NOT BE USED IN THIS DRAWING PACKAGE.

MECHANICAL GENERAL NOTES

1. ALL MECHANICAL EQUIPMENT AND SYSTEMS SHALL BE INSTALLED IN ACCORDANCE WITH THE INTERNATIONAL MECHANICAL CODE (IMC) LATEST EDITION, AND ALL LOCAL & STATE CODES.
2. ALL PLUMBING EQUIPMENT AND SYSTEMS SHALL BE INSTALLED IN ACCORDANCE WITH THE LATEST ADOPTED PLUMBING CODE, AND ALL LOCAL & STATE CODES.
3. ALL MECHANICAL AND PLUMBING EQUIPMENT SHALL BE INSTALLED PER THE MANUFACTURER'S RECOMMENDATIONS.
4. MECHANICAL CONTRACTORS SHALL RECEIVE PRIOR APPROVAL FROM THE STRUCTURAL ENGINEER BEFORE MAKING CUTS THROUGH ANY STRUCTURAL MEMBER.
5. MECHANICAL CONTRACTORS SHALL COORDINATE INSTALLATION WITH CONSTRUCTION SUPERVISOR AND WITH ALL OTHER TRADES TO AVOID CONFLICTS.
6. THE MECHANICAL CONTRACTORS SHALL VERIFY MOTOR VOLTAGES WITH THE ELECTRICAL DRAWINGS BEFORE ORDERING MOTORIZED EQUIPMENT AND CONTROLS.
7. SEE MECHANICAL SCHEDULE SHEET FOR SCHEDULED CAPACITIES OF ALL MECHANICAL EQUIPMENT AND MATERIALS SPECIFIED.
8. THE EXISTING DOMESTIC WATER SERVICE IS PROVIDED WITH BACKFLOW PREVENTER.
9. ALL MECHANICAL EQUIPMENT TO BE PROPOSED MUST BE ON THE APPROVED LIST PRIOR TO SUBMITTALS. ALL APPROVED MANUFACTURERS MUST BE CAPABLE OF MEETING THE REQUIREMENTS OF THE SPECIFIED EQUIPMENT.
10. RUNOUT AND HOOKUP SIZES TO INDIVIDUAL PLUMBING FIXTURE CAN BE FOUND ON THE PLUMBING FIXTURE SCHEDULE.
11. PROVIDE REMOTE CEILING ACCESS BALANCE DAMPERS WITH CONCEALED CHROME PLATE COVERS FOR BALANCE DAMPERS LOCATED ABOVE HARD CEILINGS.
12. MAINTAIN MINIMUM OF 10'-0" DISTANCE BETWEEN ALL FRESH AIR INTAKES AND EXHAUST OR GAS FLUE DISCHARGES.
13. THE PLUMBING CONTRACTOR IS RESPONSIBLE FOR ALL BACKFLOW DEVICES TO BE INSPECTED BY A CERTIFIED BACKFLOW TECHNICIAN BEFORE THE USE OF THE BUILDING POTABLE WATER SYSTEM.
14. THE CONTRACTOR SHALL BE HELD RESPONSIBLE FOR VERIFICATION OF EXISTING JOB CONDITIONS PRIOR TO BID. NO ADDITIONAL COST SHALL BE AWARDED TO THE SUCCESSFUL CONTRACTOR (OR THEIR SUBCONTRACTORS) AFTER BIDS HAVE BEEN SUBMITTED AND CONTRACTS AWARDED FOR FAILURE TO VERIFY EXISTING FIELD CONDITIONS. DISCREPANCIES BETWEEN ACTUAL FIELD CONDITIONS AND CONTRACT DOCUMENTS SHALL BE BROUGHT TO THE ENGINEERS ATTENTION FOR ALTERNATIVE METHODS OF INSTALLATION PRIOR TO THE BIDDING OF THIS PROJECT.
15. UNLESS OTHERWISE NOTED ALL EXISTING MECHANICAL EQUIPMENT, PIPING, ETC, TO BE REMOVED SHALL BE DISPOSED OF BY THE CONTRACTOR UNDER THIS CONTRACT. THE OWNER SHALL RETAIN THE RIGHT TO KEEP ANY REMOVED ITEMS.
16. ALL DOMESTIC COLD AND HOT WATER LINES IN THE AREA OF WORK WHICH ARE NO LONGER IN USE DUE TO THIS PROJECT SHALL BE REMOVED BACK TO THE MAINS AND CAPPED.
17. HOLES IN EXISTING WALL OR FLOORS SHALL BE PATCHED TO MATCH EXISTING WHERE PIPING, DUCTWORK, ETC. WERE REMOVED OR ADDED DURING THIS PROJECT.
18. DAMAGE TO THE EXISTING FACILITY DURING THE CONSTRUCTION SHALL BE REPAIRED OR REPLACED BY THE CONTRACTOR AT NO COST TO THE OWNER.
19. PROJECT INCLUDES SOURCE EXHAUST AT ALL DUST-PRODUCING DEVICES. FINAL OSHA COMPLIANCE IS DEPENDENT UPON ITD OPERATIONAL STANDARDS.

MECHANICAL AND PLUMBING DRAWINGS LEGEND

	FLEXIBLE DUCTWORK	(E)	EXISTING
	DUCTWORK	(N)	NEW
	DUCTWORK BREAK		REDUCED PRESSURE BACKFLOW PREVENTER
	DUCTWORK OR PIPING RISE		DOUBLE CHECK BACKFLOW PREVENTER
	CONCENTRIC SQUARE TO ROUND TRANSITION		UNION
M	MOTORIZED DAMPER		AIR VENT
	MANUAL VOLUME DAMPER		GATE VALVE
AIRFLOW	SPIN-IN FITTING W/ AIR EXTRACTOR AND HAND DAMPER		REDUCER
AIRFLOW	HIGH EFFICIENCY FITTING W/ HAND DAMPER		GLOBE VALVE
$	SWITCH		BALL VALVE
T	THERMOSTAT		BUTTERFLY VALVE
S	TEMPERATURE SENSOR		BALANCE VALVE
#	EQUIPMENT CALLOUT		CHECK VALVE
	TURNING VANES	FCO	FLOOR CLEANOUT
	INTAKE OR EXHAUST	WCO	WALL CLEANOUT
	DIRECTION OF AIRFLOW		FLOOR DRAIN
L-X CFM X"Ø	SUPPLY DIFFUSER		GAS PRESSURE REGULATOR W/ GAS COCK
L-X CFM X"Ø	EXHAUST GRILLE		PRESSURE RELIEF VALVE
	TEMPERATURE GAUGE		VENT-THROUGH-ROOF
	PRESSURE GAUGE (LIQUID FILLED W/ ISOLATION VALVE)		VENT
TS	TEMPERATURE SENSOR (DUCT OR PIPING)		SOIL, WASTE, OR SANITARY SEWER
	STAINLESS STEEL BRAIDED FLEX CONNECTION		DOMESTIC COLD WATER (CW)
	ELASTOMETRIC FLEX CONNECTOR		DOMESTIC HOT WATER (HW)
	Y TYPE STRAINER (1 1/2" OR LARGER PROVIDED W/ BLOW DOWN VALVE)		DOMESTIC HOT WATER RETURN (HWR)
	FLOW DIRECTION	G	LOW PRESSURE NATURAL GAS
	DEMOLITION / EQUIPMENT TO BE REMOVED		SLOPE PIPE IN DIRECTION OF ARROW
	NEW TO EXISTING CONNECTION POINT		CAP

NOTE: THIS IS A LIST OF COMMONLY USED MECHANICAL AND PLUMBING SYMBOLS. SOME OF THE SYMBOLS SHOWN ABOVE MAY NOT BE USED IN THIS DRAWING PACKAGE.

ENERGY CODE COMPLIANCE

A. COMPLIANCE WITH THE LATEST ADOPTED EDITION OF THE INTERNATIONAL ENERGY CONSERVATION CODE IS REQUIRED FOR THIS PROJECT. THESE NOTES COVER MANDATORY REQUIREMENTS OF THE CODE. ADDITIONAL REQUIREMENTS ARE NOTED ON THE DRAWINGS AND IN THE SPECIFICATIONS.

B. MINIMUM REQUIREMENTS FOR SUPPLY AND RETURN DUCTWORK INSULATION:

1. R-6: DUCTS LOCATED IN UNCONDITIONED SPACES (SPACE NEITHER HEATED NOR COOLED SUCH AS ABOVE CEILING SPACES, WALL SPACES, DUCT CHASES, SOFFITS, ATTICS, CRAWL SPACES, UNHEATED BASEMENTS, AND UNHEATED GARAGES).
2. R-12: DUCTS LOCATED OUTSIDE OF THE BUILDING'S INSULATION ENVELOPE (SUCH AS ABOVE THE ATTIC INSULATION).

TYPICAL INSULATION THICKNESS REQUIRED TO MEET THESE REQUIREMENTS:

1. FIBERGLASS DUCT WRAP: R-6, R-12.
2. FIBERGLASS DUCT LINER: R-6, R-12.

C. CONTRACTOR SHALL VERIFY WITH THE MANUFACTURER, THE R-VALUES OF THE ACTUAL INSULATION USED. R-VALUES SHALL BE INSTALLED VALUES.

D. ALL DUCT JOINTS, SEAMS, AND CONNECTIONS SHALL BE FASTENED AND SEALED WITH WELDS, GASKETS, ADHESIVES, MASTIC-PLUS-EMBEDDED-FABRIC SYSTEMS, OR TAPES. TAPES AND MASTICS SHALL BE LISTED AND LABELED PER UL181A OR UL181B. DUCT TAPE IS NOT PERMITTED AS A SEALANT ON ANY METAL DUCTS. DUCT CONNECTIONS TO FLANGES OR EQUIPMENT SHALL BE SEALED AND MECHANICALLY FASTENED.

G. DOMESTIC HOT WATER PIPING SYSTEMS SHALL BE INSULATED WITH 1" INSULATION HAVING A CONDUCTIVITY NOT EXCEEDING 0.27 BTU-INCH/HOUR-FT2-°F.

H. DOMESTIC WATER HEATERS WHICH ARE NOT PROVIDED WITH INTEGRAL HEAT TRAPS AND SERVE NONCIRCULATING SYSTEMS SHALL BE PROVIDED WITH HEAT TRAPS ON THE SUPPLY AND DISCHARGE PIPING AT THE WATER HEATER.

I. AN OPERATING AND MAINTENANCE MANUAL SHALL BE PROVIDED PRIOR TO ISSUANCE OF A CERTIFICATE OF OCCUPANCY. THE O&M MANUAL SHALL CONTAIN THE FOLLOWING INFORMATION AS A MINIMUM:

1. EQUIPMENT CAPACITY (INPUT & OUTPUT).
2. EQUIPMENT OPERATING AND MAINTENANCE INSTRUCTIONS.
3. CONTROL SYSTEM MAINTENANCE AND CALIBRATION INFORMATION, INCLUDING WIRING DIAGRAMS, SCHEMATICS, AND CONTROL SEQUENCES.
4. CONTROL SYSTEM SETPOINTS SHALL BE SHOWN ON CONTROL DRAWINGS, AT CONTROL DEVICES, OR IN PROGRAMMING COMMENT ON DDC SYSTEMS.
5. A COMPLETE WRITTEN NARRATIVE ON HOW EACH MECHANICAL SYSTEM IS INTENDED TO OPERATE.

COM*check* Software Version COMcheckWeb

Mechanical Compliance Certificate

Project Information

Energy Code: 2015 IECC
Project Title: ITD D5 Lab Modification
Location: Boise, Idaho
Climate Zone: 5b
Project Type: Alteration

Construction Site:
5151 S. 5th Avenue
Pocatello, Idaho 83204

Owner/Agent:

Designer/Contractor:

Mechanical Systems List

Quantity System Type & Description

1 MAU-1 (Single Zone):
Heating: 1 each - Central Furnace, Gas, Capacity Unknown
Proposed Efficiency = 92.00% Et; Required Efficiency: 80.00 % Et or 78% AFUE
Fan System: FAN SYSTEM 1 -- Compliance (Motor nameplate HP method) : Passes

Fans:
FAN 1 Supply, Constant Volume, 3400 CFM, 2.0 motor nameplate hp, 0.9 fan efficiency grade

Mechanical Compliance Statement

Compliance Statement: The proposed mechanical alteration project represented in this document is consistent with the building plans, specifications, and other calculations submitted with this permit application. The proposed mechanical systems have been designed to meet the 2015 IECC requirements in COM*check* Version COMcheckWeb and to comply with any applicable mandatory requirements listed in the Inspection Checklist.

Chris Dyke, PE		10/22/2020
Name - Title	Signature	Date

NO.	REVISIONS	DATE

PROFESSIONAL ENGINEER
LICENSED
16683
10/26/2020
STATE OF IDAHO
CHRISTOPHER DYKE

MUSGROVE
ENGINEERING, P.A.
234 S. Whisperwood Way
Boise, Idaho 83709
208.384.0585
musgrovepa.com
OVER 40 YEARS OF EXCELLENCE

IDAHO TRANS. DEPT.
MATERIALS LAB MODIFICATION
5151 S 5TH AVE.
POCATELLO, IDAHO

PROJECT	20-229
DRAWN	CD
CHECKED	TN
DATE	20-10-22
SCALE	SEE PLANS
SHEET	

M0.0

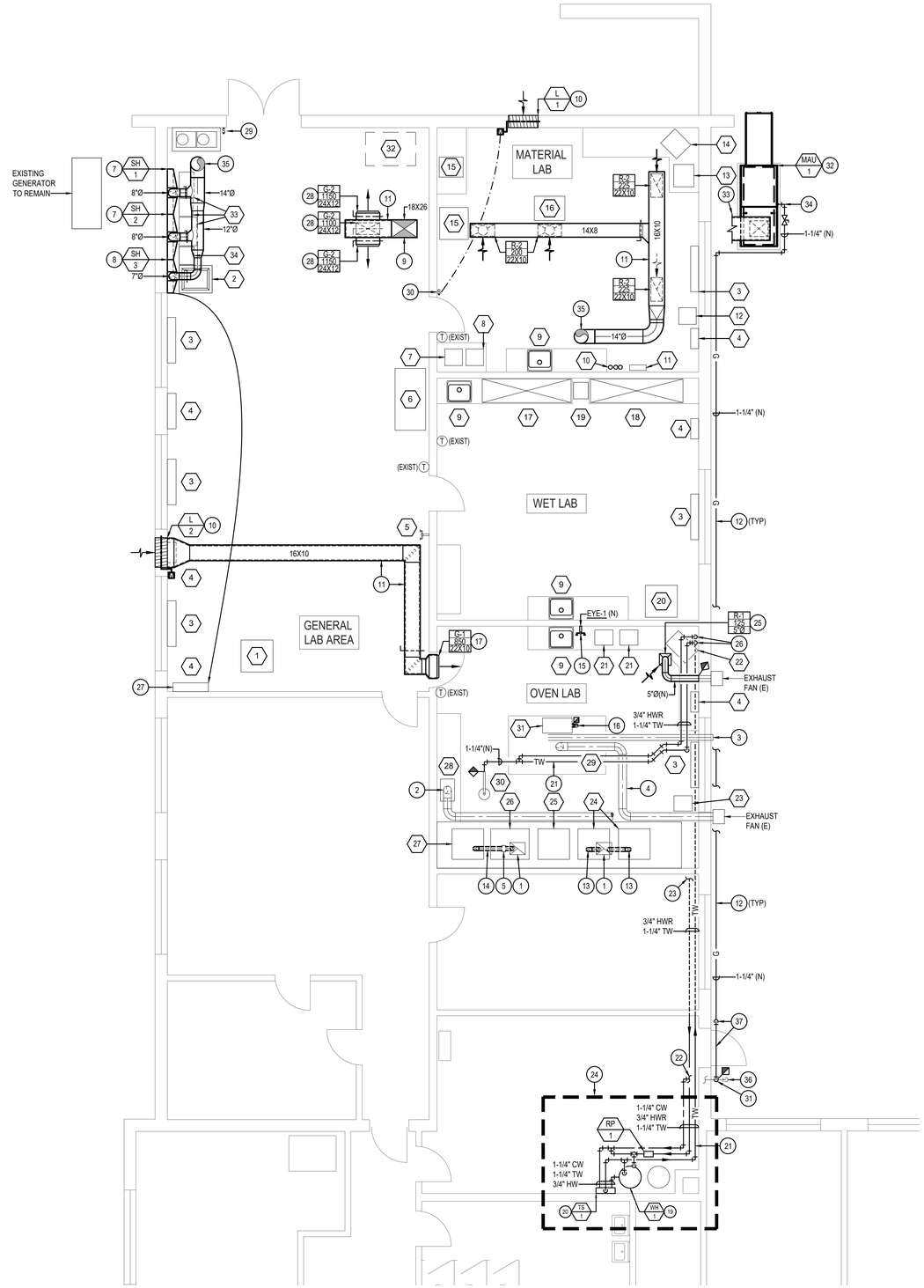

MATERIALS LAB MECHANICAL FLOOR PLAN

3/16" = 1'-0"

NORTH

KEYED NOTES:

(#) SYMBOL USED FOR NOTE CALLOUT.

1. EXISTING DUCT UP TO FAN ON ROOF.
2. EXISTING 8"Ø DUCT OUT TO SIDEWALL FAN.
3. EXISTING DUCT 6"Ø OPEN TO SPACE.
4. EXISTING EXHAUST DUCT OUT TO SIDEWALL FAN.
5. EXISTING INLINE EXHAUST FAN.
6. ROUTE NEW EXHAUST DUCT THROUGH EXTERIOR WALL. SEAL WALL PENETRATION.
7. NEW 46" SLOT HOOD TO CAPTURE SOURCE DUST/FUMES. CONTRACTOR SHALL FIELD VERIFY EXISTING CONDITIONS PRIOR TO BID. SEE DETAIL #1 ON SHEET M4.0.
8. NEW 34" SLOT HOOD TO CAPTURE SOURCE DUST/FUMES. CONTRACTOR SHALL FIELD VERIFY EXISTING CONDITIONS PRIOR TO BID. SEE DETAIL #2 ON SHEET M4.0.
9. ROUTE 18"X26" DUCT FROM ROOF ABOVE. SEAL ROOF PENETRATION. SEE SHEET M2.0 FOR CONTINUATION.
10. NEW 30"X22" MOTORIZED LOUVER. COORDINATE INSTALLATION WITH EXISTING CONDUIT AND WALL APPLIANCES. INTERLOCK WITH WALL SWITCH.
11. ROUTE INTERIOR LINED AND INSULATED DUCTWORK TIGHT TO CEILING. SEE DETAILS #3 & #4 ON SHEET M3.0 FOR STRUCTURAL SUPPORT REQUIREMENTS.
12. ROUTE NEW 1-1/4" LOW PRESSURE GAS LINE LOW AND TIGHT TO WALL 6" ABOVE GRADE.
13. PROVIDE NEW 3" ID SEAMLESS STEEL TUBING VENT FROM TOP OF OVEN. ROUTE UP TO HOOD INTAKE. SUPPORT WITH WALL BRACKET. SECURE TO EXTERIOR WALL.
14. REPLACE EXISTING METAL EXHAUST DUCT WITH SEAMLESS STEEL TUBING VENT. CONNECT AND TRANSITION TO EXISTING INLINE EXHAUST FAN.
15. PROVIDE AND INSTALL NEW 1/2" TEE OFF OF EXISTING 1/2" CW LINE LOCATED UNDER SINK. ROUTE A NEW 1/2" CW LINE TO NEW EYE WASH. MOUNT ON EXISTING SINK RIGHT OF FAUCET. CONTRACTOR TO VERIFY EXISTING CONDITIONS PRIOR TO BID.
16. PROVIDE NEW 3" SCHEDULE 80 STEEL VENT FROM ACID WASTE CABINET. VENT TO ROOF AND PROVIDE TURNED DOWN NECK WITH STAINLESS STEEL INSECT SCREEN. SEAL AROUND ROOF PENETRATION.
17. INSTALL SUPPLY GRILLE TIGHT TO CEILING. SEAL WALL PENETRATION.
18. INTERLOCK LOUVER WITH ALL OVEN FAN SWITCHES IN LAB.
19. NEW ELECTRIC WATER HEATER LOCATED ON MECHANICAL ROOM FLOOR.
20. NEW TEMPERED WATER MIXING STATION. SEE DETAIL #1 ON SHEET M2.0 FOR PIPING REQUIREMENTS.
21. REMOVE EXISTING 1" COLD WATER LINE. REPLACE WITH NEW 1-1/4" TEMPERED WATER LINE. (TYP)
22. PROVIDE NEW 1-1/4" COLD WATER LINE TO TEMPERING STATION (TS-1). TAP OFF OF EXISTING COLD WATER LINE. CONTRACTOR TO VERIFY EXISTING CONDITIONS PRIOR TO BID.
23. ROUTE NEW 3/4" HWR LINE UNDER FLOOR THROUGH TUNNEL.
24. SEE PIPING SCHEMATIC ON DETAIL #4 ON SHEET M3.1.
25. REMOVE 5"Ø EXHAUST DUCT BACK TO WALL. PROVIDE NEW 5"Ø EXHAUST DUCT TO EXHAUST GRILLE. MOUNT 7' AFF. SUSPEND NEW EXHAUST GRILLE AS REQUIRED.
26. ROUTE NEW 3/4" HWR AND 1-1/4" TW LINE DOWN ON INSIDE OF EXTERIOR WALL TO TUNNEL BELOW. CORE DRILL AND SEAL FLOOR PENETRATIONS.
27. RELOCATE EXISTING WALL HEATER TO INDICATED LOCATION.
28. PROVIDE NEW SUPPLY GRILLES MOUNTED ON SIDE AND BOTTOM OF 24"X20" DUCTWORK. AVOID ALL EXISTING LIGHTS AND CONDUIT. PROVIDE GRILLE WITH OPPOSED BLADE DAMPER FOR BALANCING.
29. NEW WALL SWITCH TO CONTROL EF-1 AND MAU-1.
30. NEW WALL SWITCH TO CONTROL NEW EXHAUST FAN (EF-2) AND MOTORIZED WALL LOUVER (L-1).
31. NEW 1-1/4" LOW PRESSURE GAS CONNECTION.
32. NEW MAKE-UP AIR UNIT ON GRADE. PROVIDE WITH 4" CONCRETE PAD. INSTALL A MINIMUM OF (6) BOLLARDS AROUND UNIT FOR PROTECTION. MAINTAIN CLEARANCE REQUIREMENTS ON ALL SIDES OF UNIT BASED ON MANUFACTURER RECOMMENDATIONS. CONTRACTOR TO VERIFY ADDITIONAL GAS LOAD CAN BE HANDLED BY EXISTING GAS SERVICE.
33. TRANSITION AND SUPPORT LINED AND INSULATED 24"X20" SUPPLY DUCTWORK DOWN TO MAU-1 OPENING. SEE SHEET M2.0 FOR CONTINUATION.
34. ROUTE 1-1/4" GAS LINE DOWN TO MAKEUP AIR UNIT (MAU-1). SEE DETAIL #5 ON SHEET M3.1 FOR REQUIREMENTS.
35. ROUTE 14"Ø EXHAUST DUCT TO ROOF. SEAL ROOF PENETRATION. SEE SHEET M2.0 FOR CONTINUATION.
36. EXISTING 1-1/2" LOW PRESSURE GAS LINE.
37. ROUTE 1-1/4" GAS LINE OVER DOOR AND DOWN TO 6" ABOVE GRADE.

EXISTING MATERIALS LAB EQUIPMENT LIST:

1. NEDERMAN PORTABLE DUST COLLECTOR
2. GILSON SHAKER
3. FLOOR MOUNTED HEAT PUMP
4. WALL ELECTRIC HEATER
5. WALL MOUNTED EYE WASH
6. OVEN VWR
7. AIR COMPRESSOR
8. TESTING WATER TANK
9. SINK W/SEDIMENT TRAP
10. 1/2" SOFT CW, 1/2" CA AND 1/2" HW FROM TUNNEL BELOW
11. RO UNIT TO SERVE DURASTILL MACHINE
12. DURASTILL TESTING MACHINE
13. 1600 HAFO SERIES UNIT
14. 1600 HAFO SERIES UNIT (COUNTERTOP UNIT)
15. PLINE MACHINE
16. VWR OVEN
17. WATER TESTING TANK
18. WATER TESTING TANK
19. PUMP TANK HEAT ELEMENT
20. CONCRETE POLISHER - WET TYPE
21. RAPID DRY UNITS
22. CLEANING STATION "SAFETY KLEEN"
23. WATER TANK TESTING TUB
24. NCAT MACHINES (DUCTED TO EXHAUST DUCT OPENING)
25. 1600 HAFO SERIES OVEN (COUNTERTOP TYPE)
26. 1600 HAFO SERIES OVEN (FLOOR MOUNTED)
27. NCAT MACHINE (DUCTED WITH BOOSTER FAN TO DUCT)
28. DRYING HOOD AREA
29. EXHAUST ARM - NEDERMAN
30. EMERGENCY SHOWER.
31. CHEMICAL CABINET (BELOW CABINET)
32. FUTURE HUMBOLDT MACHINE
33. SPLITTER
34. GILSON TEST-MASTER SHAKER

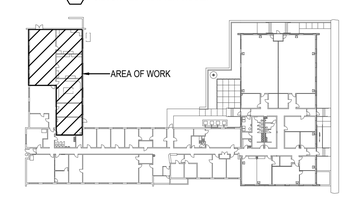

ITD POCATELLO KEY PLAN

NTS

NORTH

NO.	REVISIONS	DATE

PROFESSIONAL ENGINEER LICENSED Christopher Dyke 16683 10/26/2020 STATE OF IDAHO CHRISTOPHER DYKE

MUSGROVE ENGINEERING, P.A.
234 S. Whisperwood Way
Boise, Idaho 83709
208.384.0585
musgrovepa.com
OVER 40 YEARS OF EXCELLENCE

IDAHO TRANS. DEPT. MATERIALS LAB MODIFICATION 5151 S 5TH AVE. POCATELLO, IDAHO

PROJECT	20-229
DRAWN	CD
CHECKED	TN
DATE	20-10-22
SCALE	SEE PLANS
SHEET	M1.0

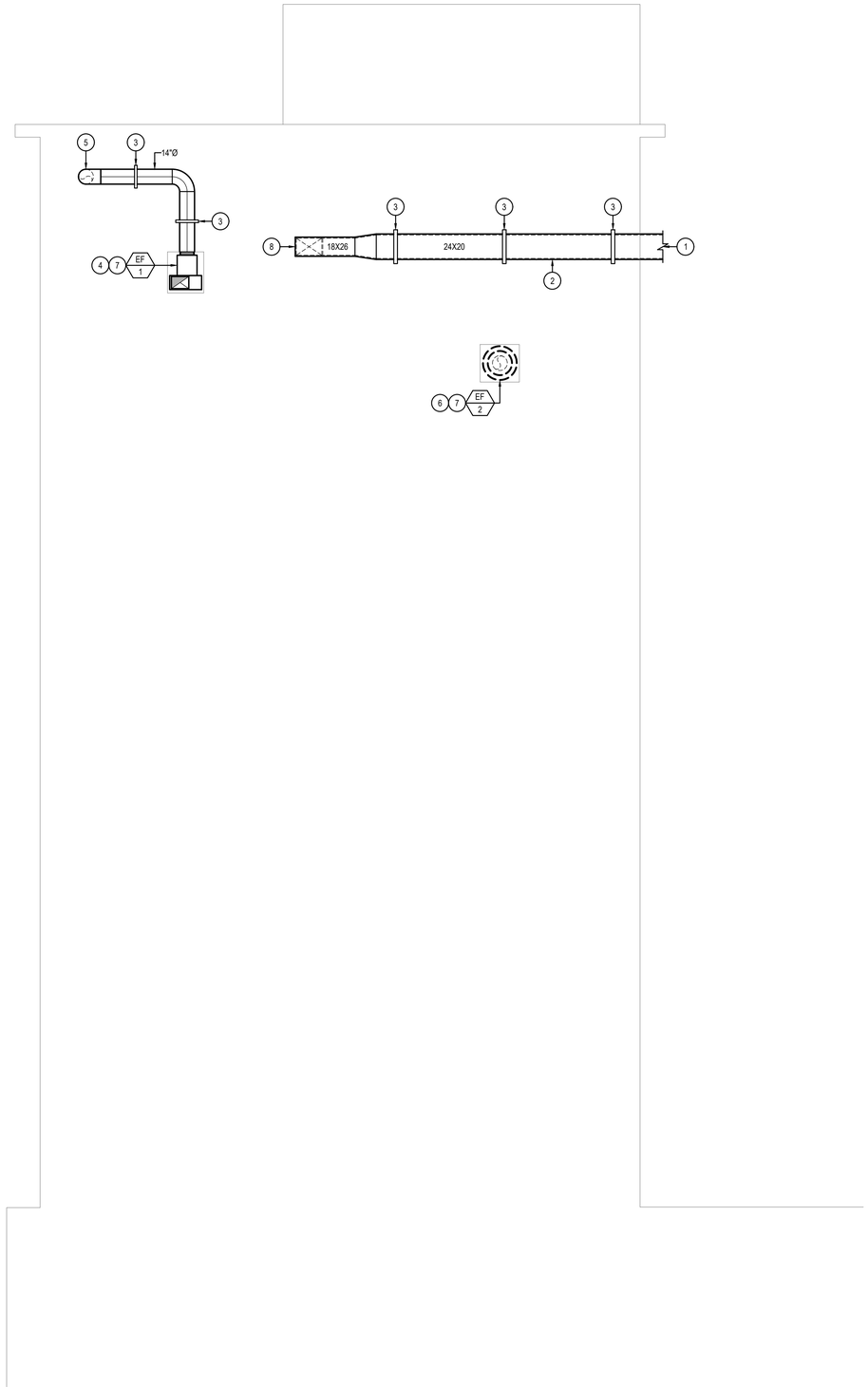

KEYED NOTES:

(#) SYMBOL USED FOR NOTE CALLOUT.

1. SEE SHEET M1.0 FOR CONTINUATION.
2. ROUTE 24"X20" LINED AND INSULATED SUPPLY DUCT ON EXISTING ROOF. SEE DETAIL #6 ON SHEET M3.1 FOR REQUIREMENTS.
3. PROVIDE SUPPORT FOR ROOF MOUNTED DUCTWORK. SEE DETAIL #2 ON SHEET M3.1.
4. NEW ROOF MOUNTED UTILITY EXHAUST FAN ON ROOF CURB. CONNECT AND TRANSITION TO 14"Ø EXHAUST DUCT. PROVIDE FLEXIBLE DUCT CONNECTION AT EXHAUST FAN. SEE DETAIL #1 & #2 ON SHEET M4.0 FOR ADDITIONAL REQUIREMENTS. MAINTAIN 10' MINIMUM FROM ROOF EDGE AND ANY INTAKE AIR DAMPERS.
5. ROUTE 14"Ø EXHAUST DUCT TO FLOOR BELOW. SEE SHEET M1.0 FOR CONTINUATION. SEAL NEW ROOF PENETRATION TO MAINTAIN EXISTING ROOF WARRANTY.
6. NEW ROOF MOUNTED EXHAUST FAN. SEE DETAIL #3 ON SHEET M3.1. SEAL AROUND NEW ROOF CURB PENETRATION. SEE SHEET M1.0 FOR CONTINUATION. MAINTAIN 10' MINIMUM FROM ROOF EDGE AND ANY INTAKE AIR DAMPERS.
7. CONTRACTOR TO HIRE STRUCTURAL ENGINEER TO PROVIDE INSPECTION OF THE EXISTING ROOF STRUCTURE TO ENSURE NEW EXHAUST FAN CAN BE ACCOMMODATED. CONTRACTOR SHALL PROVIDE OWNER/ENGINEER WITH ANY CALCULATIONS AND DRAWINGS PRIOR TO INSTALLATION.
8. ROUTE 18"X26" EXHAUST DUCT TO FLOOR BELOW THROUGH EXISTING CEILING JOISTS. SEE SHEET M1.0 FOR CONTINUATION. SEAL NEW ROOF PENETRATION TO MAINTAIN EXISTING ROOF WARRANTY.

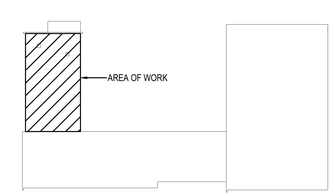

ITD POCATELLO KEY PLAN
NTS

NORTH

MATERIALS LAB MECHANICAL ROOF PLAN
3/16" = 1'-0"

NORTH

NO.	REVISIONS	DATE

PROFESSIONAL ENGINEER
LICENSED
16683
10/26/2020
STATE OF IDAHO
CHRISTOPHER DYKE

MUSGROVE
ENGINEERING, P.A.
234 S. Whisperwood Way
Boise, Idaho 83709
208.384.0585
musgrovepa.com
OVER 40 YEARS OF EXCELLENCE

IDAHO TRANS. DEPT.
MATERIALS LAB MODIFICATION
5151 S 5TH AVE.
POCATELLO, IDAHO

PROJECT	20-229
DRAWN	CD
CHECKED	TN
DATE	20-10-22
SCALE	SEE PLANS
SHEET	M2.0

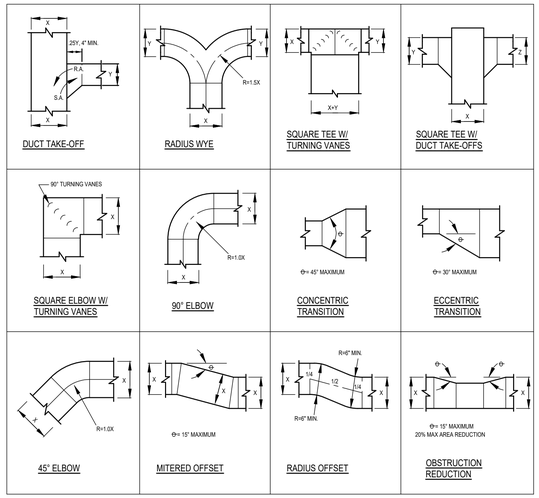

NOTE:
ALL DUCTWORK TRANSITIONS SHALL BE CONSTRUCTED AND INSTALLED TO SMACNA, SPECIFICATIONS AND THE ABOVE NOTED STANDARDS. ANY DEVIATIONS SHALL BE COORDINATED WITH THE ENGINEER.

1 RECTANGULAR DUCT FITTING DETAILS

NOT TO SCALE

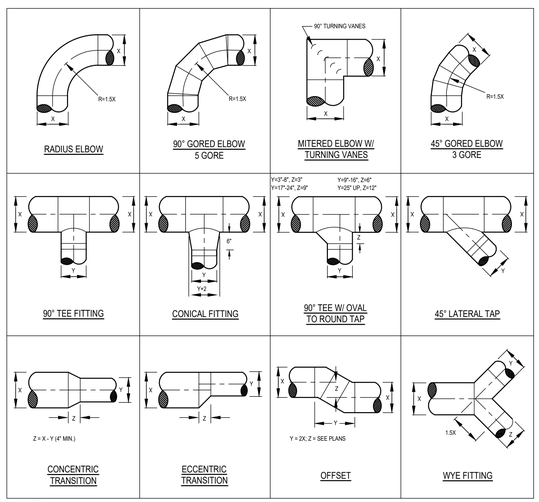

NOTE:
ALL DUCTWORK TRANSITIONS SHALL BE CONSTRUCTED AND INSTALLED TO SMACNA, SPECIFICATIONS, AND THE ABOVE NOTED STANDARDS. ANY DEVIATIONS SHALL BE COORDINATED WITH THE ENGINEER.

2 ROUND DUCT FITTING DETAILS

NOT TO SCALE

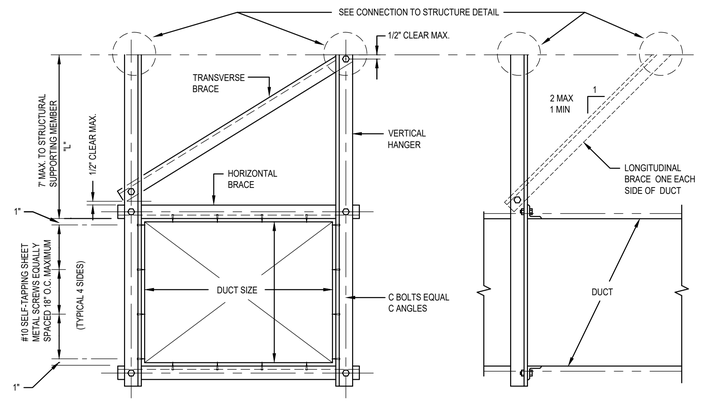

MAX. DUCT SIZE (in.)	VERTICAL HANGER ANGLE	TRANSVERSE BRACE ANGLE 10	HORIZONTAL BRACE ANGLE	LONGITUDINAL BRACE ANGLE 10	BOLT SIZE (in.)	MAX. WEIGHT PER FT. 8 (lb)	CONNECTION TYPE 9
30x30	4x4x14ga	2½x2½x12ga	2x2x16ga	3x3x16ga	3/8	17	B
42x42	4x4x12ga	2½x2½x16ga	2½x2½x16ga	3x3x12ga	3/8	29	C
54x54	3x3x¼ga	2½x2½x12ga	2½x2½x16ga	3x3x12ga	3/8	46	D
60x60	3x3x¼ga	3x3x12ga	3x3x16ga	3x3x12ga	1/2	54	D
84x84	5x3x¼ga	3x3x12ga	4x4x14ga	3x3x12ga	5/8	103	F
96x96	5x3x¼ga	4x4x12ga	4x4x12ga	4x4x12ga	5/8	129	F
54x28	4x4x12ga	2½x2½x12ga	2½x2½x16ga	3x3x12ga	1/2	34	E
60x30	4x4x12ga	3x3x12ga	3x3x16ga	3x3x12ga	1/2	39	E

NOTES:

1. BRACE ALL DUCTS WITH CROSS SECTIONAL AREAS OF 6 SQ. FT. AND LARGER. BRACE FLAT OVAL DUCTS IN THE SAME MANNER AS RECTANGULAR DUCTS.
2. NO BRACING IS REQUIRED IF THE DUCT IS SUSPENDED BY HANGERS 12 IN. OR LESS IN LENGTH, AS MEASURED FROM THE TOP OF THE DUCT TO THE BOTTOM OF SUPPORT WHERE THE HANGER IS ATTACHED. HANGERS MUST BE POSITIVELY ATTACHED TO THE DUCT WITHIN 2 INCHES OF THE TOP OF THE DUCT WITH A MINIMUM OF TWO #10 SHEET METAL SCREWS.
3. PROVIDE TRANSVERSE BRACING AT A 30 FOOT INTERVAL OR AT BOTH ENDS IF THE DUCT RUN IS LESS THAN THE SPECIFIED INTERVAL. TRANSVERSE BRACING WILL BE INSTALLED AT EACH DUCT TURN AND AT EACH END OF A DUCT RUN, WITH A MINIMUM OF ONE BRACE AT EACH END.
4. PROVIDE LONGITUDINAL BRACING AT A 60 FOOT INTERVAL WITH AT LEAST ONE BRACE PER DUCT RUN. TRANSVERSE BRACING FOR ONE DUCT SECTION MAY ALSO ACT AS LONGITUDINAL BRACING FOR A DUCT SECTION AT 90° TURNS IF THE BRACING IS INSTALLED WITHIN TWO TIMES THE DUCT WIDTH OF THE INTERSECTION OF BOTH DUCTS AND THE BRACING IS SIZED FOR THE LARGER DUCT.
5. DUCT JOINTS WILL CONFORM TO SMACNA DUCT CONSTRUCTION STANDARDS. WALLS (INCLUDING GYPSUM BOARD NON-LOAD BEARING PARTITIONS) THAT HAVE DUCTS RUNNING THROUGH THEM MAY REPLACE A TYPICAL TRANSVERSE BRACE. PROVIDE SOLID BLOCKING AROUND DUCT PENETRATIONS AT ALL STUD WALL CONSTRUCTION.
6. UN-BRACED DUCTS WILL BE INSTALLED WITH A 6 INCH MINIMUM CLEARANCE TO VERTICAL CEILING HANGER WIRES.
7. WHEN A COMBINATION OF DUCTS IS USED IN LIEU OF ONE DUCT, AT LEAST 2 SIDES OF EACH DUCT MUST BE CONNECTED TO VERTICAL OR HORIZONTAL ANGLES AND THE COMBINED WEIGHT SHALL NOT EXCEED THAT GIVEN IN THE TABLE. (ADD HORIZONTAL ANGLES IF REQUIRED).
8. MAXIMUM WEIGHT OF DUCT OR COMBINATIONS OF DUCTS IS PER LINEAR FOOT. FOR DUCTS WEIGHING MORE THAN THE MAXIMUM WEIGHT PER FOOT, USE THE NEXT HIGHER DUCT SIZE.
9. SEE CONNECTION TO STRUCTURE DETAIL.
10. PRE-STRETCHED AIRCRAFT CABLE MAY BE USED IN LIEU OF ANGLE BRACE. CABLE SHALL BE SIZED AND INSTALLED PER SMACNA. BRACING TYPES SHALL NOT BE MIXED.

3 SEISMIC BRACING FOR RECTANGULAR DUCTS

NOT TO SCALE

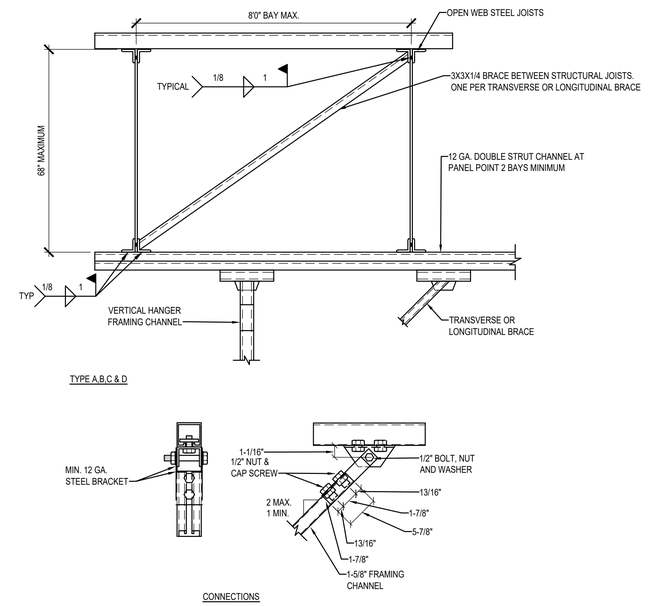

TYPE	MAX. LOAD CAPACITY 1 (lb)	MACHINE BOLT END OF BRACE (in)	SPREADER SIZE	ANGLE TO SUPPORTING STRUCTURAL MEMBER 2
A	1040	3/8	C4x5.4	3-1/2x2-1/2x3/8x0 ft, 3 in LLH
B	1415	3/8	C4x5.4	5x3x3/8x0 ft, 3 in LLH
C	1586	1/2	C5x6.7	2, 4x3x3/8x0 ft, 4 in LLH
D	2020	1/2	C6x8.5	2, 5x3x3/8x0 ft, 4 in LLH
E	2870	5/8	C8x11.5	2, 6x3-1/2x3/8x0 ft, 4 in LLH
F	4600	3/4	C9x13.4	2, 5x3x3/8x0 ft, 10 in LLH
G	7040	7/8	C10x15.3	2, 6x3-1/2x1/2x0 ft, 11-1/2 in LLH
H	9240	1	C12x20.7	2, 8x4x3/4x1 ft, 1-1/2 in LLH

NOTES:
1. MAXIMUM LOAD CAPACITY IS FOR GENERAL INFORMATION ONLY.
2. LLH = LONG LEG HORIZONTAL.

4 SEISMIC CONNECTIONS TO OPEN WEB STEEL JOISTS

NOT TO SCALE

NO.	REVISIONS	DATE

PROFESSIONAL ENGINEER LICENSED 16683 10/26/2020 STATE OF IDAHO CHRISTOPHER DYKE

MUSGROVE ENGINEERING, P.A.
234 S. Whisperwood Way
Boise, Idaho 83709
208.384.0585
musgrovepa.com
OVER 40 YEARS OF EXCELLENCE

IDAHO TRANS. DEPT.
MATERIALS LAB MODIFICATION
5151 S 5TH AVE.
POCATELLO, IDAHO

PROJECT	20-229
DRAWN	CD
CHECKED	TN
DATE	20-10-22
SCALE	SEE PLANS
SHEET	M3.0

NOTES:

1. FOR TAKE-OFFS LARGER THAN 12" DIAMETER, USE A FACTORY MANUFACTURED DAMPER. LOUVERS & DAMPERS, INC. MODEL CD-600 WITH A LOCKING HAND QUADRANT OR EQUAL.
2. ROD CONTINUOUS ON 2" W.G. CLASS AND ON ALL DAMPERS OVER 12" DIAMETER.
3. BLADE 22 GAGE MIN., BUT NOT LESS THAN TWO GAGES MORE THAN THE DUCT GAGE.
4. PROVIDE REMOTE CEILING OPERATOR WHERE DAMPER IS INACCESSIBLE.
5. FOR DUCTS OVER 12" HIGH USE MULTIPLE BLADE DAMPERS (SEE FIG. C).
6. ALTERNATE MANUFACTURERS INCLUDE: AMERICAN WARMING, SAFE-AIR/DOWCO, J&J, LOUVERS & DAMPERS, RUSKIN, NAILOR, ARROW UNITED, POTTORFF, & CESCO.
7. PROVIDE STAND-OFF FOR DAMPER ARMS LOCATED W/EXTERNAL INSULATION.

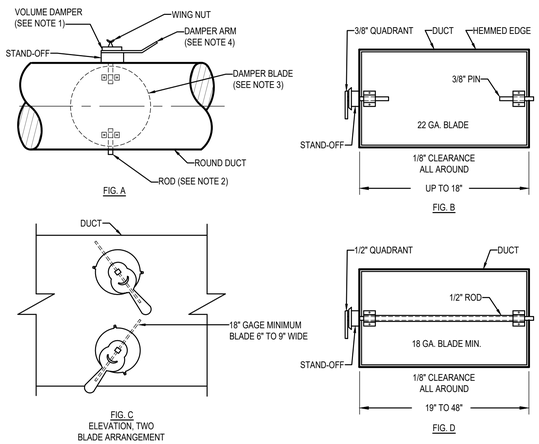

1 BALANCE DAMPER DETAIL

NOT TO SCALE

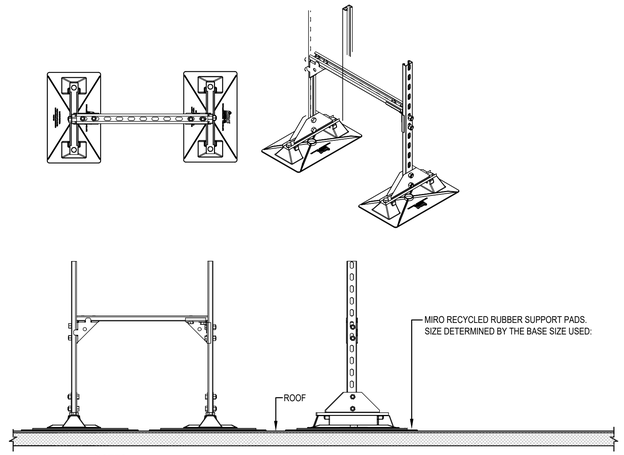

NOTES:

1. PROVIDE WITH MIRO INDUSTRIES MODEL 6-DS, GALVANIZED STEEL, HEAVY DUTY MECHANICAL ROOF SUPPORT WITH ADJUSTABLE SUPPORT LEGS.
2. DUCTS SHALL BE SECURED TO THE SUPPORT.
3. APPROVED ALTERNATE MANUFACTURERS: UNISTRUT AND ROOF-PRO

2 ROOFTOP DUCT SUPPORT DETAIL

NOT TO SCALE

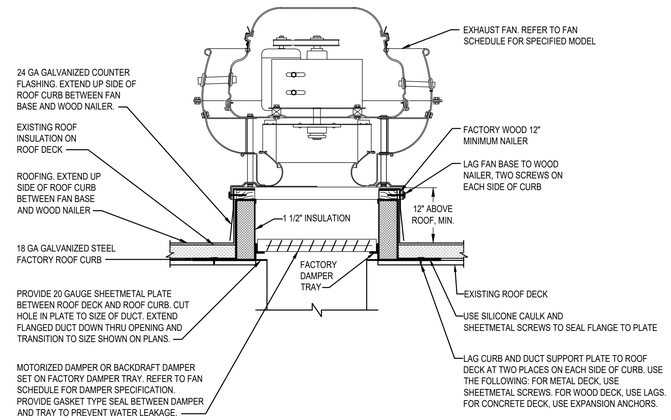

3 EXHAUST FAN MOUNTING DETAIL

NOT TO SCALE

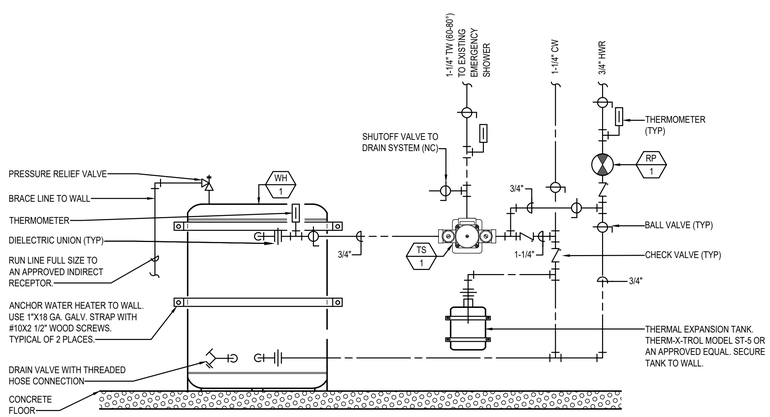

4 DOMESTIC WATER HEATER & TEMPERING STATION PIPING DETAIL

NOT TO SCALE

EQUIPMENT CONNECTION NOTES:

1. INSTALL FLEX CONNECTION AT ALL ROOF TOP UNITS WHICH HAVE SPRING ISOLATION CURBS (36" MAXIMUM)
2. INSTALL SOLID PIPE CONNECTION TO ALL ROOF TOP UNITS WHICH DO NOT HAVE SPRING ISOLATION CURBS
3. PAINT PIPE WITH RUST RESISTANT PRIMER, RED OR GRAY. SHERWIN WILLIAMS PRO INDUSTRIAL DTM OR APPROVED EQUAL.

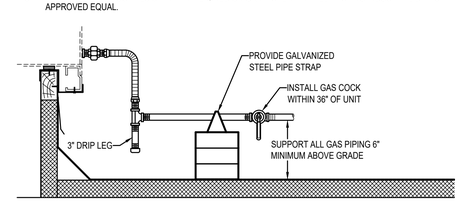

APPROVED PIPE SUPPORT SYSTEMS:

- MIRO MODEL 1.5 WITH SPACERS
- ADVANCED SUPPORT PRODUCTS
- VERSABLOCK BY FREEDOM INC

PIPE SUPPORT REQUIREMENTS	
SIZE OF PIPE	SUPPORT REQUIRED
1/2"	6' O.C.
3/4" - 1"	8' O.C.
1-1/4" OR LARGER	10' O.C.

5 MAKEUP AIR UNIT - GAS PIPING DETAIL

NOT TO SCALE

METAL FASTENERS:
OMARK INSUL-PINS, DURO DYNE FASTENERS OR GRIP NAILS INSTALLED BY GRIP NAIL AIR HAMMER OR AUTO FASTENER EQUIP.

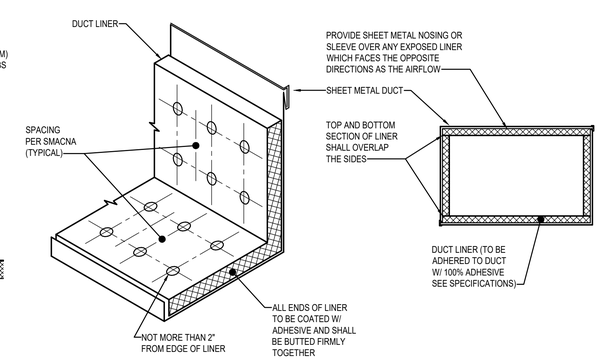

6 DUCT LINER DETAIL

NOT TO SCALE

NO.	REVISIONS	DATE

PROFESSIONAL ENGINEER LICENSED Christopher Dyke 16683 10/26/2020 STATE OF IDAHO CHRISTOPHER DYKE

MUSGROVE ENGINEERING, P.A.
234 S. Whisperwood Way
Boise, Idaho 83709
208.384.0585
musgrovepa.com
OVER 40 YEARS OF EXCELLENCE

IDAHO TRANS. DEPT.
MATERIALS LAB MODIFICATION
5151 S 5TH AVE.
POCATELLO, IDAHO

PROJECT	20-229
DRAWN	CD
CHECKED	TN
DATE	20-10-22
SCALE	SEE PLANS
SHEET	M3.1

EXHAUST FAN SCHEDULE

SYMBOL	AREA SERVED	UNIT TYPE	BLOWER				ELECTRICAL		MAXIMUM SONES	OPERATING WEIGHT (LBS)	MANUFACTURER AND MODEL	REMARKS
			CFM	ESP	MAXIMUM RPM	DRIVE	HP/W	V/Ø				
EF-1	SLOT HOOD	UTILITY FAN	3,700	2.0	2,600	BELT	3.0 HP	208/3	81	250	COOK MODEL 150CPA	1 , 2 , 4
EF-2	MATERIALS LAB	UPBLAST ROOF MOUNTED	850	0.5	1,725	BELT	0.25 HP	115/1	9.0	75	COOK 120R15D	1 , 3 , 5

REMARKS:

1. APPROVED ALTERNATE MANUFACTURERS: GREENHECK, PENNBARRY, TWIN CITY FAN COMPANY, ACME, AND BARRY BLOWER.
2. PROVIDE UNIT WITH BACKDRAFT DAMPER, ALUMINUM INLET AND OUTLET COMP FLANGE, NEMA 3 PRE-WIRED DISCONNECT, PRE-WIRED FAN SPEED CONTROLLER WITH VARIABLE SPEED DRIVE, THERMAL OVERLOAD PROTECTION, ALUMINUM DRAIN, ALUMINUM BELT GUARD, ISOLATION RAILS, RUBBER ISOLATORS, ALUMINUM DOOR HINGE, WEATHER COVER, AND CUSTOM METAL WALL BRACKET. PROVIDE NECESSARY ACCESSORIES FOR BOTTOM RETURN TRANSITION TO ROUND DUCTWORK.
3. PROVIDE UNIT WITH MANUFACTURER'S ALUMINUM ROOF CAP (FLAT ROOF) EQUAL TO COOK MODEL PR (W/ INTEGRAL BIRD SCREEN AND ROOF CURB), BACKDRAFT DAMPER, INLET AND OUTLET FLEX DUCT CONNECTIONS, STANDARD PLUG DISCONNECT, PRE-WIRED FAN SPEED CONTROLLER, DIRECT DRIVE MOTOR, AND THERMAL OVERLOAD PROTECTION.
4. PROVIDE WITH PILOT LIGHT WALL SWITCH. INTERLOCK WITH MAU-1. SEE DETAIL #1 & #2 FOR CONTROL REQUIREMENTS.
5. PROVIDE WITH PILOT LIGHT WALL SWITCH. INTERLOCK WITH WALL LOUVER IN SPACE (L-1).

LOUVER SCHEDULE

SYMBOL	SERVICE	TYPE	NOMINAL SIZE	MINIMUM FREE AREA (SQ.FT.)	FINISH	MANUFACTURER AND MODEL	REMARKS
L-1	MATERIALS LAB	FIXED DRAINABLE	30X22	1.87	AAMA2604	RUSKIN ELF375DX	1 , 2 , 3
L-2	GENERAL LAB AREA	FIXED DRAINABLE	30X22	1.87	AAMA2604	RUSKIN ELF375DX	1 , 2 , 3

REMARKS:

1. APPROVED ALTERNATE MANUFACTURERS: GREENHECK, AMERICAN WARMING, AIROLITE, SAFE-AIR/DOWCO, LOUVERS & DAMPERS, ARROW UNITED, CESCO, NCA MANUFACTURING, NAILOR, POTTORFF, AND UNITED ENERTECH.
2. COLOR TO BE SELECTED BY ENGINEER.
3. PROVIDE WITH FLANGED FRAME, INSECT SCREEN, BIRD SCREEN, AND 120V/Ø LOW LEAKAGE MOTORIZED DAMPER.

PLUMBING FIXTURE SCHEDULE

SYMBOL	FIXTURE DESCRIPTION	CONNECTION SIZE					MANUFACTURER / MODEL NUMBER / DESCRIPTION / ADDITIONAL COMMENTS
		WASTE	VENT	TRAP	CW	HW	
EYE-1	EMERGENCY EYE WASH (DECK MOUNTED)	--	--	--	1/2	--	ACORN SAFETY MODEL S0850, RH, RIGHT HAND, OR LH, LEFT HAND, DECK MOUNTED, SWING-DOWN EYEWASH WITH POLISHED CHROME PLATED BRASS SWING PIPE, TWIN EYE WASH HEADS WITH COVERS, AND STAY-OPEN BALL VALVE. EYEWASH SWINGS DOWN VERTICALLY OVER SINK TO ACTIVATE. PROVIDE WITH 1/2" NPT INLET & OUTLET, 2 GPM @ 5 PSID. PROVIDE WITH LOCKABLE INLET BALL VALVE AND BACKFLOW PREVENTER.
RP-1	RECIRCULATION PUMP (HOT WATER RETURN SYSTEM)	--	--	--	--	3/4	BELL AND GOSSETT BRONZE MODEL NBF-22, 115 VOLT, 0.8 AMPS, 92 WATTS, AND SHALL PROVIDE 7 GPM AT 10 FEET HEAD. INCLUDE 7-DAY PROGRAMMABLE ELECTRONIC TIME CLOCK WITH BATTERY BACKUP, INTERMATIC MODEL GM40AVE-RD89. APPROVED ALTERNATE: ARMSTRONG, TACO, GRUNDFOS. SEE CONTROL SCHEMATIC AND SEQUENCE OF OPERATION FOR CONTROL REQUIREMENTS.
WH-1	WATER HEATER (30 GALLON) (208V-1Ø ELECTRIC)	--	--	--	SEE PLANS	SEE PLANS	BRADFORD WHITE MODEL LE130L3-1, SINGLE ELEMENT, 4.0 KW, 208V/1Ø, 18" DIAMETER, 25" TALL, WITH SIDE CONNECTIONS. PROVIDE WITH SEISMIC STRAPS AND DRAIN PAN.
TS-1	TEMPERING STATION	--	--	--	SEE PLANS	SEE PLANS	GUARDIAN MODEL G3702LF THERMOSTATIC MIXING VALVE STATION. PROVIDE WITH SURFACE MOUNTED STAINLESS STEEL CABINET. VALVE SHALL BE RATED FOR EMERGENCY SHOWER AND EYEWASH USE.

NOTES:

1. ALL ADA COMPLIANT FIXTURES MUST COMPLY WITH ICC/ANSI A117.1.
2. SEE RECIRCULATION PUMP CONTROL SCHEMATIC AND SEQUENCE OF OPERATION.

RETURN & EXHAUST GRILLE SCHEDULE

SYMBOL	NOMINAL SIZE	NECK / RUNOUT SIZE	CFM RANGE	REMARKS
R-1 5"Ø	8X8	5"Ø	0-150	1 , 2 , 3 , 4
R-2 10"Ø	22X10	22X10	180-300	1 , 2 , 3 , 4

REMARKS:

1. SIZES BASED ON TITUS MODEL 50F, ALUMINUM EGGCRATE RETURN GRILLE, 1/2" x 1/2" x 1" SPACING (SINGLE CORE). PROVIDE SQUARE TO ROUND TRANSITION (WHERE ROUND RUN-OUT INDICATED). APPROVED ALTERNATE MANUFACTURERS INCLUDE , ANEMOSTAT, CARNES, PRICE, NAILOR, METAL-AIRE, TUTTLE & BAILEY, KRUEGER, J&J REGISTER, AND UNITED ENERTECH.
2. SIZES BASED ON A MAXIMUM NC LEVEL OF 25.
3. WHENEVER THERE IS A DISCREPANCY BETWEEN THE RUNOUT DUCT SIZE SHOWN ON THE PLANS AND THAT SHOWN IN THE SCHEDULE, ALWAYS USE THE LARGER OF THE TWO DUCT SIZES.
4. WHITE FINISH.

SUPPLY GRILLE SCHEDULE

SYMBOL	NOMINAL SIZE	NECK / RUNOUT SIZE	CFM RANGE	REMARKS
G-1 CFM SIZE	22X10	22X10	0-850	1 , 2 , 3
G-2 CFM SIZE	24X12	24X12	0-1200	1 , 2 , 3 , 4

REMARKS:

1. WALL GRILLE SIZES BASED ON TITUS MODEL 272F, DOUBLE DEFLECTION ADJUSTABLE BLADES, 3/4" SPACING, WHITE FINISH. APPROVED ALTERNATE MANUFACTURERS INCLUDE ANEMOSTAT, CARNES, J&J REGISTER, TUTTLE & BAILEY, NAILOR, METAL-AIRE, KRUEGER, PRICE, AND UNITED ENERTECH.
2. SIZES BASED ON A MAXIMUM NC LEVEL OF 25.
3. WHENEVER THERE IS A DISCREPANCY BETWEEN THE RUNOUT DUCT SIZE SHOWN ON THE PLANS AND THAT SHOWN IN THE SCHEDULE, ALWAYS USE THE LARGER OF THE TWO DUCT SIZES.
4. PROVIDE WITH OPPOSED BLADE DAMPER.

SLOT HOOD SCHEDULE

SYMBOL	LOCATION	SERVES	EXHAUST MATERIAL	EXHAUST AIRFLOW (CFM)	EXHAUST OUTLET SIZE	MINIMUM DUCT VELOCITY (FPM)	PD (" WG)	HOOD DIMENSIONS				SLOTS				OPERATING WEIGHT (LBS)	MANUFACTURER AND MODEL	REMARKS
								LENGTH	HEIGHT	DEPTH	MAXIMUM VELOCITY (FPM)	NO.	LENGTH	HEIGHT	MINIMUM VELOCITY (FPM)			
SH-1	GENERAL LAB AREA	SPLITTER MACHINE	HEAVY DUST	1,350	8"Ø	3,500	2.0"	46"	54"	6"	1/2 SLOT VELOCITY	4	46"	1/2"	1,830	125	CAR-MON FH-46	1 , 2 , 3 , 4
SH-2	GENERAL LAB AREA	SHAKER MACHINE	HEAVY DUST	1,350	8"Ø	3,500	2.0"	46"	54"	6"	1/2 SLOT VELOCITY	4	46"	1/2"	1,830	125	CAR-MON FH-46	1 , 2 , 3 , 4
SH-3	GENERAL LAB AREA	SHAKER MACHINE	HEAVY DUST	1,000	7"Ø	3,500	0.85"	34"	44"	6"	1/2 SLOT VELOCITY	4	34"	1/2"	1,830	125	CAR-MON FH-34	1 , 2 , 3 , 4

REMARKS:

1. ALTERNATE MANUFACTURERS: ACS, NEDERMAN, MONOXIVENT, KEES, AND VENTAIRE.
2. PROVIDE W/ MANUFACTURER'S HINGED AND ADJUSTABLE SIDE BAFFLES, BLAST GATE.
3. PROVIDE W/ 304 STAINLESS STEEL CONSTRUCTION.
4. RUN-OUT DUCT SHALL BE THE SAME SIZE AS THE SLOT HOOD EXHAUST OUTLET.

GAS FIRED MAKE-UP AIR UNIT SCHEDULE

SYMBOL	AREA SERVED	TYPE	SUPPLY FAN				ELECTRICAL		TEMP RISE (°F)	GAS HEATING		WEIGHT (LBS)	MANUFACTURER AND MODEL	REMARKS
			CFM	ESP	HP	RPM	V/Ø	AMPS		INPUT MBH	OUTPUT MBH			
MAU-1	GENERAL LAB AREA	OUTDOOR, DIRECT GAS FIRED	3,400	0.6	2.0	1,416	208/3	11.6	70.0	233.2	214.5	800	CAPTIVEAIRE A2-D.250-20D	1 , 2 , 3 , 4

REMARKS:

1. APPROVED ALTERNATE MANUFACTURERS: DAIKIN APPLIED, STERLING, HASTINGS, REZNOR, MCQUAY-DAIKIN, TRANE, ESSICK, RUPP AIR, AND WEATHERITE.
2. PROVIDE UNIT WITH E-3 (409) STAINLESS STEEL HEAT EXCHANGER, FREEZESTAT, FAN SPEED CONTROLLER, DIRECT DRIVE EC MOTOR WITH FACTORY MOUNTED VFD, FILTER RACK AND FILTERS, INSULATED DOWNTURN PLENUM CABINET, 2-POSITION DISCHARGE DAMPER, 100% OSA SCREENED INLET AIR HOOD, AND FULL ROOF CURB.
3. PROVIDE UNIT WITH TOTALLY ENCLOSED, PREMIUM EFFICIENCY MOTORS AND MOTOR STARTER.
4. PROVIDE UNIT WITH ELECTRONIC MODULATION WITH DUCTSTAT, REMOTE TEMPERATURE SELECTION, AND A ROOM OVERRIDE THERMOSTAT.

GENERAL
THE EMERGENCY SHOWER HOT WATER RECIRCULATION PUMP (RP-1) SHALL OPERATE OFF OF A TIMECLOCK.

OPERATION
THE RECIRCULATION PUMP SHALL OPERATE FOR 15-MIN (ADJUSTABLE) EVERY SEVEN DAYS (ADJUSTABLE) THIS WILL HELP ENSURE WATER IS FLUSHED CONSISTENTLY.

HOT WATER PUMP SEQUENCE OF OPERATION

(RP-1)

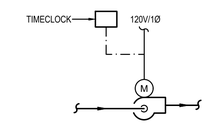

HOT WATER PUMP CONTROL SCHEMATIC

(RP-1)

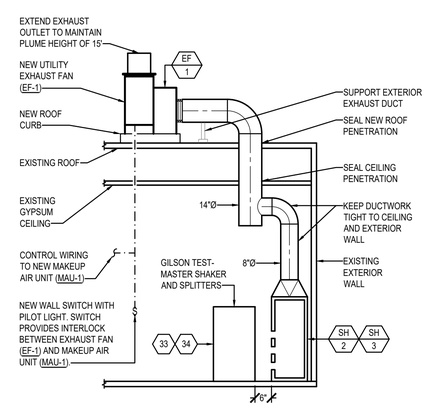

1 EF-1, SH-1, & SH-2 DETAIL
NOT TO SCALE

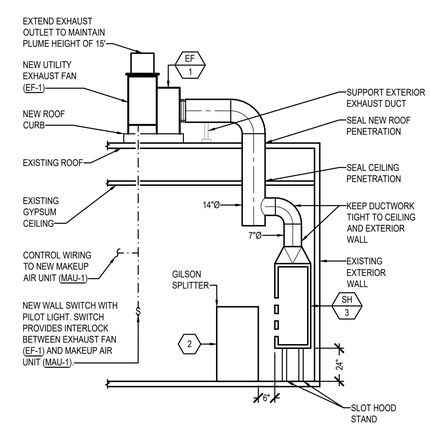

2 EF-1 & SH-3 DETAIL
NOT TO SCALE

NO.	REVISIONS	DATE

PROFESSIONAL ENGINEER LICENSED 16683 10/26/2020 STATE OF IDAHO CHRISTOPHER DYKE

MUSGROVE ENGINEERING, P.A.
234 S. Whisperwood Way
Boise, Idaho 83709
208.384.0585
musgrovepa.com
OVER 40 YEARS OF EXCELLENCE

IDAHO TRANS. DEPT.
MATERIALS LAB MODIFICATION
5151 S 5TH AVE.
POCATELLO, IDAHO

PROJECT	20-229
DRAWN	CD
CHECKED	TN
DATE	20-10-22
SCALE	SEE PLANS
SHEET	M4.0