# IDAHO TRANSPORTATION DEPARTMENT

# MATERIALS LAB MODIFICATION

# DISTRICT 6

206 N. Yellowstone Hwy.
Rigby, Idaho 83442

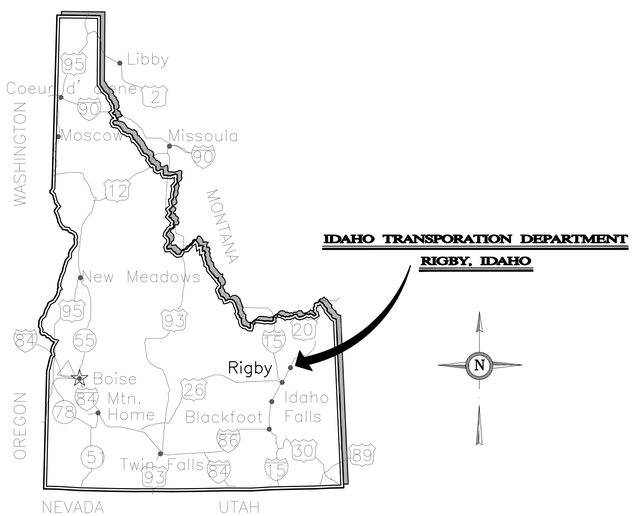


## INDEX OF DRAWINGS


| SHEET | DESCRIPTION |
|---|---|
| G0.0 | Project Title Sheet |
| E0.0 | Electrical Title Sheet |
| E1.0 | Materials Lab #1 Mechanical Power Plan |
| E1.1 | Remote Materials Lab Mechanical Power Plan |
| E1.2 | Aggregate Materials Lab Mechanical Power Plan |
| M0.0 | Mechanical Title Sheet |
| M1.0 | Materials Lab #1 Mechanical Floor Plan |
| M1.1 | Remote Materials Lab Mechanical Floor Plan |
| M1.2 | Aggregate Materials Lab Mechanical Floor Plan |
| M2.0 | Materials Lab #1 Mechanical Roof Plan |
| M3.0 | Mechanical Details |
| M3.1 | Mechanical Details |
| M4.0 | Mechanical Schedules |
| P1.0 | Plumbing Floor Plan |
| P2.0 | Plumbing Details and Schedules |


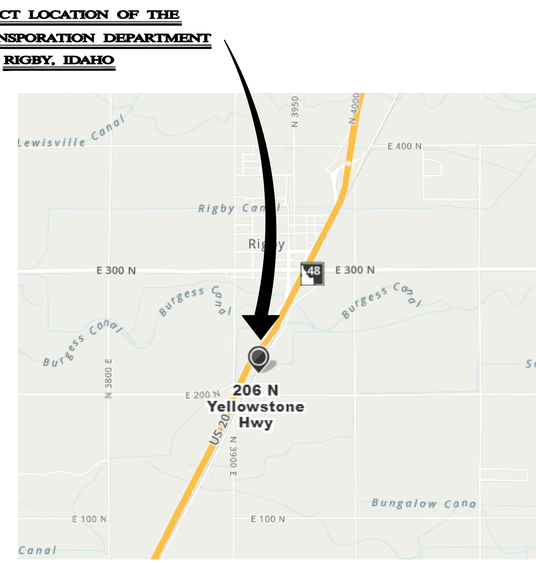


Rigby, Idaho

## Partial Vicinity Map

no scale

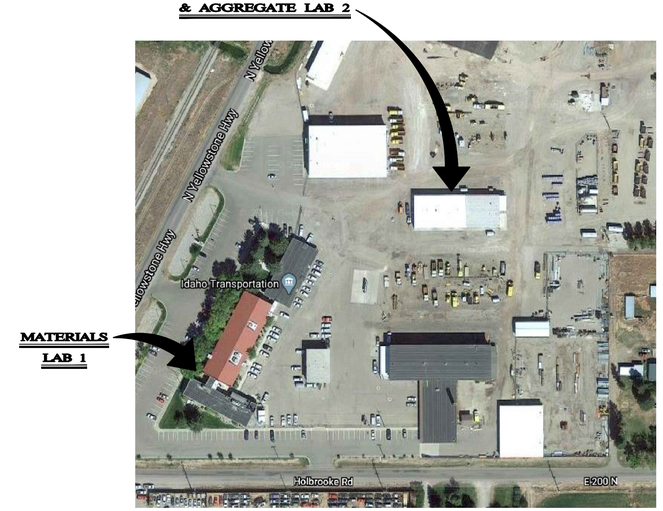


Rigby, Idaho

## ITD Campus Map

no scale

| NO. | REVISIONS | DATE |
|---|---|---|
| | | |

PROFESSIONAL ENGINEER
LICENSED
16683
11/6/2020
STATE OF IDAHO
CHRISTOPHER DYKE


MUSGROVE
ENGINEERING, P.A.
234 S. Whisperwood Way
Boise, Idaho 83709
208.384.0585
musgrovepa.com
OVER 40 YEARS OF EXCELLENCE


IDAHO TRANS. DEPT.
MATERIALS LAB MODIFICATION
206 N YELLOWSTONE HWY
RIGBY, IDAHO

| | |
|---|---|
| PROJECT | 20-230 |
| DRAWN | CD |
| CHECKED | TN |
| DATE | 20-11-06 |
| SCALE | SEE PLANS |
| SHEET | G0.0 |

# ELECTRICAL LEGEND - LIGHTING

REFERENCE FIXTURE SCHEDULE FOR MOUNTING TYPE, MOUNTING HEIGHT, AND FIXTURE TYPE.

- DOUBLE FACE EXIT SIGN, CEILING MOUNTED, PROVIDE UNSWITCHED CONDUCTOR.
- WALL MOUNTED DOUBLE FACE EXIT SIGN PROVIDE UNSWITCHED CONDUCTOR. MOUNT AT +8'-0" UNO.
- SINGLE FACE EXIT SIGN, CEILING MOUNTED PROVIDE UNSWITCHED CONDUCTOR.
- WALL MOUNTED SINGLE FACE EXIT SIGN PROVIDE UNSWITCHED CONDUCTOR. MOUNT AT +8'-0" UNO.
- ARROW INDICATES DIRECTION TO BE SHOWN ON SIGN.
- 1'X1' LIGHT FIXTURE.
- 1'X1' LIGHT FIXTURE, PROVIDE EMERGENCY BATTERY BACKUP CONNECTED TO AN UNSWITCHED CONDUCTOR.
- TRACK LIGHT
- 1'X4' LIGHT FIXTURE.
- 1'X4' LIGHT FIXTURE, PROVIDE EMERGENCY BATTERY BACKUP CONNECTED TO AN UNSWITCHED CONDUCTOR.
- 2'X4' LIGHT FIXTURE.
- 2'X4' LIGHT FIXTURE, PROVIDE EMERGENCY BATTERY BACKUP CONNECTED TO AN UNSWITCHED CONDUCTOR.
- 2'X2' LIGHT FIXTURE.
- 2'X2' LIGHT FIXTURE, PROVIDE EMERGENCY BATTERY BACKUP CONNECTED TO AN UNSWITCHED CONDUCTOR.
- DIRECT/INDIRECT LIGHT FIXTURE. SEE SCHEDULE FOR LENGTH.
- DIRECT/INDIRECT LIGHT FIXTURE. SEE SCHEDULE FOR LENGTH. PROVIDE EMERGENCY BATTERY BACKUP CONNECTED TO AN UNSWITCHED CONDUCTOR
- STRIP LIGHT FIXTURE. SEE SCHEDULE FOR LENGTH.
- STRIP LIGHT FIXTURE. SEE SCHEDULE FOR LENGTH. PROVIDE EMERGENCY BATTERY BACKUP CONNECTED TO AN UNSWITCHED CONDUCTOR
- WALL MOUNTED LIGHT FIXTURE.
- WALL MOUNTED LIGHT FIXTURE, PROVIDE EMERGENCY BATTERY BACKUP CONNECTED TO AN UNSWITCHED CONDUCTOR.
- RECESSED LIGHT FIXTURE
- RECESSED LIGHT FIXTURE. PROVIDE EMERGENCY BATTERY BACKUP CONNECTED TO AN UNSWITCHED CONDUCTOR.
- ROUND LIGHT FIXTURE
- ROUND EMERGENCY LIGHT FIXTURE. PROVIDE EMERGENCY BATTERY BACKUP CONNECTED TO AN UNSWITCHED CONDUCTOR.
- WALL MOUNTED LIGHT FIXTURE.
- WALL MOUNTED EMERGENCY LIGHT FIXTURE. PROVIDE EMERGENCY BATTERY BACKUP CONNECTED TO AN UNSWITCHED CONDUCTOR.
- POLE LIGHT 1 HEAD WITH POLE
- TC — TIME CLOCK
- PC — PHOTO CONTROL CELL LOCATED 12" ABOVE ROOF FACING NORTH.
- OS — OCCUPANCY SENSOR. PROVIDE RELAYS AND POWER PACKS AS REQUIRED
- D — LED DRIVER
- EMERGENCY EGRESS LIGHTING WITH OUT FIXTURE HEADS. CONNECT TO AN UNSWITCHED CONDUCTOR.
- EMERGENCY EGRESS LIGHTING. CONNECT TO AN UNSWITCHED CONDUCTOR.
- XXX — INDICATES FIXTURE TYPE. REFER TO FIXTURE SCHEDULE.
- EXTERIOR WALL PACK
- EMERGENCY EXTERIOR WALL PACK. PROVIDE EMERGENCY BATTERY BACKUP CONNECTED TO AN UNSWITCHED CONDUCTOR

# DEVICES

- S — SWITCH, TYPE AS INDICATED. +46"AFF
  - 2 DOUBLE POLE
  - 3 3-WAY
  - 4 4-WAY
  - K KEYED
  - P PILOT LIGHT
  - D DIMMER
  - HP HORSEPOWER RATED
  - TO THERMAL OVERLOAD
  - LV LOW VOLTAGE
  - OS OCCUPANCY SENSOR
  - OR LOW VOLTAGE, MOMENTARY OVERRIDE
  - VS VACANCY SENSOR
  - a SUPERSCRIPT INDICATES LIGHTS TO BE SWITCHED TOGETHER
- $ — DUAL LEVEL SWITCHING, INSIDE AND OUTSIDE LAMPS OF FIXTURE TO BE SWITCHED SEPARATELY.
- $ — DUAL LEVEL SWITCHING WITH OCCUPANCY SENSOR, INSIDE AND OUTSIDE LAMPS OF FIXTURE TO BE SWITCHED SEPARATELY.
- OCCUPANCY SENSOR WITH MANUAL DIMMING, SET FOR 50% AUTOMATIC ON, AUTOMATIC OFF, WITH MANUAL DIMMING.
- SINGLE CONVENIENCE OUTLET, +18" AFF UNO
- FLOOR MOUNT SINGLE CONVENIENCE OUTLET
- DUPLEX CONVENIENCE OUTLET, +18" AFF UNO
- FLOOR MOUNT DUPLEX CONVENIENCE OUTLET
- EMERGENCY DUPLEX CONVENIENCE OUTLET, +18" AFF UNO
- SWITCHED DUPLEX CONVENIENCE OUTLET, +18" AFF UNO
- FLOOR MOUNTED SWITCHED DUPLEX CONVENIENCE OUTLET
- USB DUPLEX CONVENIENCE OUTLET, +18" AFF UNO
- USB FOURPLEX CONVENIENCE OUTLET, +18" AFF UNO
- FOURPLEX CONVENIENCE OUTLET. +18"AFF UNO
- FLOOR MOUNT FOURPLEX CONVENIENCE OUTLET
- CONNECTION POINT TO EQUIPMENT SPECIFIED, ELECTRICAL CONTRACTOR TO SUPPLY RACEWAY AND CONDUCTORS AND MAKE FINAL CONNECTION TO EQUIPMENT UNDER THIS SECTION. UNO
- FLOOR MOUNTED CONNECTION POINT, SEE NOTE ABOVE FOR REQUIREMENTS
- FLOOR MOUNTED JUNCTION BOX
- JUNCTION BOX
- WALL MOUNTED PUSH BUTTON, MOUNT AT SWITCH HEIGHT UNO
- HC — WALL MOUNTED PUSH BUTTON, HANDICAPPED MOUNT AT SWITCH HEIGHT UNO
- WALL MOUNTED PUSH BUTTON, MOUNT AT SWITCH HEIGHT UNO
- MOTOR STARTER/CONTACTOR, SIZE/POLES NEMA 1 UNO AS INDICATED
- COMBINATION STARTER AND DISCONNECT, SIZE/POLES, STARTER SIZE AS INDICATED, NEMA 1 UNO
- F — FUSED DISCONNECT SWITCH, SIZE/POLES, FUSE SIZES AS INDICATED, NEMA 1 UNO
- NON-FUSED DISCONNECT SIZE/ POLES AS INDICATED, NEMA 1 UNO
- T X-X — THERMOSTAT, +46" AFF PROVIDE CONDUIT, J-BOX, CONDUCTORS AS REQUIRED TO CONTROL ASSOCIATED UNITS. UNO COORDINATE WITH DIVISION 15.
- POWER POLE - DUAL CHANNEL
- T — TRANSFORMER
- PANELBOARD. SEE SCHEDULE FOR TYPE.
- EQUIPMENT CABINET, SURFACE MOUNTED
- EQUIPMENT CABINET FLUSH MOUNTED
- SURFACE MULTI-OUTLET RACEWAY
- # # # # — MECHANICAL EQUIPMENT CALL OUT
- # — KITCHEN EQUIPMENT CALLOUT

# ONE LINE

- DELTA WYE TRANSFORMER UNO
- # PANEL NAME VOLTAGE PHASE — PANEL BOARD, SEE SCHEDULE FOR TYPE AND SIZE
- ##A #P — CIRCUIT BREAKER, SIZE AND POLES INDICATED
- ##A — FUSE, SIZE AND TYPE INDICATED, PROVIDE FUSE FOR EACH POLE
- ##A #P — INTERRUPTER SWITCH, SIZE AND POLES INDICATED
- ##A #P — FUSED SWITCH, SIZE/POLES AND FUSE SIZE INDICATED
- ##A #P — DRAW OUT CIRCUIT BREAKER, SIZE AND POLES INDICATED
- ###A #P — INDIVIDUAL BREAKER WITH SHUNT TRIP, SIZE AND POLES INDICATED. NEMA 1 UNO
- ###A #P — INDIVIDUAL BREAKER, SIZE AND POLES INDICATED. NEMA 1 UNO
- GFP — GROUND FAULT PROTECTION
- TVSS — TRANSIENT VOLTAGE SURGE SUPPRESSION
- LSIGR — ADJUSTABLE BREAKER SETTINGS (PER SPECIFICATIONS): 'L'-LONG TIME 'S'-SHORT TIME 'I'-INSTANTANEOUS 'G'-GROUND FAULT 'R'-ENERGY REDUCING MAINTENANCE SWITCH W/STATUS INDICATOR
- GROUND
- ST — SHUNT TRIP COIL
- M — MOTOR
- 100A 3P — DISCONNECT SWITCH, SIZE AND POLES INDICATED. NEMA 1 UNO
- OVERHEAD SERVICE DROP
- ###A/3P — GENERATOR SET, MAIN BREAKER SIZE INDICATED
- AUTOMATIC TRANSFER SWITCH (ATS)
- M — METER AND BASE
- N — NEUTRAL
- T — DRY TYPE TRANSFORMER
- PAD MOUNT TRANSFORMER

# ELECTRICAL ABBREVIATIONS

| | |
|---|---|
| A | AMPERES |
| AC | 6" ABOVE BACKSPLASH |
| AFF | ABOVE FINISHED FLOOR |
| AFG | ABOVE FINISHED GRADE |
| AF | AMP FRAME |
| AIC | AMPS INTERRUPTING CAPACITY |
| AT | AMP TRIP |
| ATS | AUTOMATIC TRANSFER SWITCH |
| AWG | AMERICAN WIRE GAUGE |
| BD | BOTTOM OF DECK |
| BS | BOTTOM OF STRUCTURE |
| C | CEILING MOUNTED |
| C | CONDUIT |
| CB | CIRCUIT BREAKER |
| CF | COMPACT FLUORESCENT |
| CKT | CIRCUIT |
| CO | CONDUIT ONLY, PROVIDE PULL-LINE |
| CT | CURRENT TRANSFORMER |
| CTL | CONTROL |
| DC | DIRECT CURRENT |
| (D) | DEMOLITION |
| DEMO | DEMOLITION |
| DET | DETAIL |
| DTT | DOUBLE TWIN TUBE |
| E | EMERGENCY |
| (E) | EXISTING |
| EC | ELECTRICAL CONTRACTOR |
| EL | EMERGENCY LIGHT |
| F | FUSE |
| (F) | FUTURE |
| FACP | FIRE ALARM CONTROL PANEL |
| G/GND | GROUND |
| GFCI | GROUND FAULT CIRCUIT INTERRUPTER |
| GFI | GROUND FAULT INTERRUPTER |
| HH | HAND HOLE |
| HID | HIGH INTENSITY DISCHARGE |
| HOA | HAND-OFF-AUTO |
| HPS | HIGH PRESSURE SODIUM |
| HVAC | HEATING, VENTILATION, & AIR CONDITIONING |
| IG | ISOLATED GROUND |
| IPCO | IDAHO POWER COMPANY |
| J-BOX | JUNCTION BOX |
| KA | KILOAMP |
| KVA | KILO VOLT-AMP |
| KW | KILOWATT |
| KWH | KILOWATT HOUR |
| LCP | LIGHTING CONTROL PANEL |
| MB | MAIN BREAKER |
| MBR | MAIN CIRCUIT BREAKER |
| MCC | MOTOR CONTROL CENTER |
| MDP | MAIN DISTRIBUTION PANEL |
| MLO | MAIN LUGS ONLY |
| MMC | MODULAR METERING CENTER |
| MH | METAL HALIDE |
| MSB | MAIN SWITCH BOARD |
| MTG | MOUNTING |
| N | NEUTRAL |
| (N) | NEW |
| NC | NORMALLY CLOSED |
| NEC | NATIONAL ELECTRICAL CODE |
| NIC | NOT IN CONTRACT |
| NL | NIGHT LIGHT |
| NO | NORMALLY OPEN |
| NTS | NOT TO SCALE |
| OH | OVERHEAD |
| OS | OCCUPANCY SENSOR |
| P | POLES |
| PC | PHOTO-CONTROL |
| PVC | POLYVINYL CHLORIDE |
| PWR | POWER |
| RE: | REFERENCE |
| REC | RECEPTACLE |
| (R) | RELOCATED |
| SF | SQUARE FEET |
| TBD | TO BE DETERMINED |
| TDR | TIME DELAY RELAY |
| TK | TOE KICK |
| TSP | TWISTED SHIELDED PAIR |
| TRT | TRIPLE TUBE |
| TTB | TELEPHONE TERMINAL BOARD |
| (TYP.) | TYPICAL |
| UC | UNDERCABINET |
| UG | UNDERGROUND |
| U.N.O. | UNLESS NOTED OTHERWISE |
| V | VOLT |
| VA | VOLT-AMPERE |
| W | WATT |
| WG | WIRE GUARD |
| WP | WEATHER PROOF/NEMA 3R |
| PROVIDED/ PROVIDE BY INSTALLED/ INSTALL | PROVIDE AND INSTALL / PROVIDED AND INSTALLED BY / PROVIDE AND INSTALL |

NOTE: THIS IS A STANDARD LIST OF COMMONLY USED ELECTRICAL ABBREVIATIONS. SOME OF THE ABBREVIATIONS SHOWN ABOVE MAY NOT BE USED IN THIS DRAWING PACKAGE.

# ELECTRICAL GENERAL NOTES

A. THESE ELECTRICAL DRAWINGS ARE DIAGRAMMATIC IN NATURE; THEREFORE, THE ELECTRICAL CONTRACTOR SHALL COORDINATE ALL ELECTRICAL EQUIPMENT AND DEVICE LOCATIONS WITH ARCHITECTURAL, MECHANICAL, AND PLUMBING DIVISIONS PRIOR TO ROUGH-IN. REFER TO AND COORDINATE WITH ARCHITECTURAL, MECHANICAL, AND PLUMBING DRAWINGS FOR ADDITIONAL WORK THAT IS REQUIRED BY THE ELECTRICAL CONTRACTOR.

B. ALL CONDUIT AND JUNCTION BOXES ARE TO BE CONCEALED UNLESS LOCATED WITHIN DEDICATED ELECTRICAL OR MECHANICAL ROOMS. USE OF SURFACE MOUNTED RACEWAYS IN ALL OTHER SPACES MUST BE APPROVED BY THE ARCHITECT FOR EACH LOCATION. WHERE SURFACE RACEWAYS ARE APPROVED, UTILIZE WIREMOLD, OR APPROVED EQUAL. SURFACE MOUNTED RACEWAYS PAINTED TO MATCH SURROUNDING WALLS.

C. REFER TO ARCHITECTURAL ELEVATIONS FOR OUTLET HEIGHTS WHERE THE SPECIFIC OUTLET HEIGHT IS NOT INDICATED. REFER TO THE ELECTRICAL LEGEND FOR THE DEFAULT OUTLET HEIGHT WHEN NOT INDICATED ON ELEVATIONS OR ON AT THE DEVICES.

D. PROVIDE PULL-LINE IN ALL EMPTY CONDUITS.

E. TERMINATE ALL LOW-VOLTAGE CONDUITS WITH INSULATED THROAT BUSHING.

F. MECHANICAL EQUIPMENT INDICATED IS SHOWN IN AN APPROXIMATE LOCATION. COORDINATE EXACT LOCATION WITH MECHANICAL CONTRACTOR PRIOR TO ROUGH-IN.

G. ALL NON-LOCKING, 120-V, 15 AND 20-AMP RECEPTACLES SHALL BE LISTED TAMPER-RESISTENT RECEPTACLES PER NEC 406.12(c).

# SHEET INDEX


| | |
|---|---|
| E0.0 | ELECTRICAL COVER SHEET |
| E1.0 | MATERIALS LAB #1 MECHANICAL POWER PLAN |
| E1.1 | REMOTE MATERIALS LAB MECHANICAL POWER PLAN |
| E1.2 | AGGREGATE MATERIALS LAB MECHANICAL POWER PLAN |


LEGEND IS GENERAL IN NATURE. NOT ALL OF THE SYMBOLS SHOWN ARE USED IN THIS PROJECT.

# CIRCUITING SYMBOLS

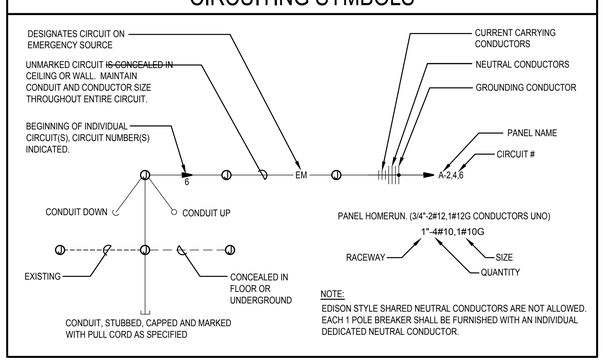


NOTE:
EDISON STYLE SHARED NEUTRAL CONDUCTORS ARE NOT ALLOWED. EACH 1 POLE BREAKER SHALL BE FURNISHED WITH AN INDIVIDUAL DEDICATED NEUTRAL CONDUCTOR.

| NO. | REVISIONS | DATE |
|---|---|---|
| | | |

PROFESSIONAL ENGINEER REGISTERED 13299 STATE OF IDAHO MATTHEW N. BRADLEY 01/06/2020


MUSGROVE ENGINEERING, P.A.
234 S. Whisperwood Way
Boise, Idaho 83709
208.384.0585
musgrovepa.com
OVER 40 YEARS OF EXCELLENCE


IDAHO TRANS. DEPT.
MATERIALS LAB MODIFICATION
206 N YELLOWSTONE HWY
RIGBY, IDAHO

| | |
|---|---|
| PROJECT | 20-230 |
| DRAWN | DH |
| CHECKED | MB |
| DATE | 20-11-06 |
| SCALE | SEE PLANS |
| SHEET | E0.0 |

| PANEL: | J (EXISTING) | PROJECT: | 20-230 IDAHO TRANS. DEPT. |
|---|---|---|---|
| VOLTAGE: | 208Y/120 | 3 PH | 4 WIRE |
| AMPERE RATING: | 250 MBR | SC RATING: | 65000 AIC |
| MOUNTING: | SURFACE | | |

CKT NOTES:
1. EXISTING BREAKER

REMARKS:

| CKT | DESCRIPTION | CKT NOTE | LOAD AMPS | AMPS/ POLES | | PHASE (AMPS) A | B | C | AMPS/ POLES | | LOAD AMPS | CKT NOTE | DESCRIPTION | CKT |
|---|---|---|---|---|---|---|---|---|---|---|---|---|---|---|
| 1 | DRAFTING ROOM & CONN STAIR LIGHTS | 1 | | 20 | 1 | 0 | | | 20 | 1 | | 1 | ASPHALT LAB & RECEIVING ROOM LIGHTS | 2 |
| 3 | DRAFTING ROOM LIGHTS | 1 | | 20 | 1 | | 0 | | 20 | 1 | | 1 | SOILS LAB LIGHTS | 4 |
| 5 | DRAFTING ROOM LIGHTS | 1 | | 20 | 1 | | | 0 | 20 | 1 | | 1 | SOILS LAB & HALL LIGHTS | 6 |
| 7 | DRAFTING RM & LOCATION OFF LIGHTS | 1 | | 20 | 1 | 0 | | | 20 | 1 | | 1 | CONCRETE LAB LIGHTS | 8 |
| 9 | RECEPTION HALL LIGHTS | 1 | | 20 | 1 | | 0 | | 20 | 1 | | 1 | CONCRETE LAB LIGHTS | 10 |
| 11 | RECEPTION, GEOLOGIST & RR LIGHTS | 1 | | 20 | 1 | | | 0 | 30 | 2 | | 1 | OVEN | 12 |
| 13 | TRAFFIC & MATERIALS OFFICE LIGHTS | 1 | | 20 | 1 | 0 | | | ** | * | | 1 | *** | 14 |
| 15 | MAINTENANCE OFFICE LIGHTS | 1 | | 20 | 1 | | 0 | | 20 | 1 | | 1 | DRAFTING RM S WALL/FLR PLUGS L&T PLU | 16 |
| 17 | LAB VENTS FANS (WALL & CEILING) | 1 | | 20 | 1 | | | 0 | 20 | 1 | | 1 | RECEPTION AREA & CONN HALL PLUGS | 18 |
| 19 | S & E WALL RECEPTS | 1 | | 20 | 1 | 0 | | | 20 | 1 | | 1 | | 20 |
| 21 | LAB SPARE | 1 | | 20 | 1 | | 0 | | 20 | 1 | | 1 | MAINT & MATERIALS OFFICE PLUGS | 22 |
| 23 | LAB ??? RECEPTS | 1 | | 20 | 1 | | | 0 | 20 | 1 | | 1 | SOILS LAB PLUGS WEST & EX FAN | 24 |
| 25 | ASPHALT LAB PLUGS & FUME HOODS | 1 | | 20 | 1 | 0 | | | 20 | 1 | | 1 | SOILS LAB PLUGS EAST & EX FAN | 26 |
| 27 | FUME HOODS & FANS | 1 | | 20 | 1 | | 0 | | 30 | 2 | | 1 | PRINTER | 28 |
| 29 | OVEN | 1 | | 30 | 2 | | | 0 | ** | * | | 1 | *** | 30 |
| 31 | *** | 1 | | ** | * | 0 | | | 20 | 1 | | 1 | ?? | 32 |
| 33 | NEW OVEN/FURNACE | 1 | | 30 | 2 | | 0 | | 20 | 1 | | 1 | ASPHALT LAB PLUGS | 34 |
| 35 | *** | 1 | | ** | * | | | 0 | 20 | 1 | | 1 | EXHAUST FAN | 36 |
| 37 | ?? | 1 | | ?? | 3 | 0 | | | 20 | 2 | | 1 | 240V FLOOR RECEPT | 38 |
| 39 | *** | 1 | | ** | * | | 0 | | ** | * | | 1 | *** | 40 |
| 41 | *** | 1 | | ** | * | | | 0 | 20 | 1 | | 1 | ?? | 42 |
| | | | | | | 0.0 | 0.0 | 0.0 | AMPS | | | | | |
| | | | | | | 0.0 | 0.0 | 0.0 | KW | | | 0 | TOTAL KW | |

| PANEL: | J (NEW) | PROJECT: | 20-230 IDAHO TRANS. DEPT. |
|---|---|---|---|
| VOLTAGE: | 208Y/120 | 3 PH | 4 WIRE |
| AMPERE RATING: | 225 MLO | SC RATING: | 10000 AIC |
| MOUNTING: | SURFACE | | |

CKT NOTES:

REMARKS:

| CKT | DESCRIPTION | CKT NOTE | LOAD AMPS | AMPS/ POLES | | PHASE (AMPS) A | B | C | AMPS/ POLES | | LOAD AMPS | CKT NOTE | DESCRIPTION | CKT |
|---|---|---|---|---|---|---|---|---|---|---|---|---|---|---|
| 1 | DRAFTING ROOM & CONN STAIR LIGHTS | | | 20 | 1 | 0 | | | 20 | 1 | | | ASPHALT LAB & RECEIVING ROOM LIGHTS | 2 |
| 3 | DRAFTING ROOM LIGHTS | | | 20 | 1 | | 0 | | 20 | 1 | | | SOILS LAB LIGHTS | 4 |
| 5 | DRAFTING ROOM LIGHTS | | | 20 | 1 | | | 0 | 20 | 1 | | | SOILS LAB & HALL LIGHTS | 6 |
| 7 | DRAFTING RM & LOCATION OFF LIGHTS | | | 20 | 1 | 0 | | | 20 | 1 | | | CONCRETE LAB LIGHTS | 8 |
| 9 | RECEPTION HALL LIGHTS | | | 20 | 1 | | 0 | | 20 | 1 | | | CONCRETE LAB LIGHTS | 10 |
| 11 | RECEPTION, GEOLOGIST & RR LIGHTS | | | 20 | 1 | | | 0 | 30 | 2 | | | OVEN | 12 |
| 13 | TRAFFIC & MATERIALS OFFICE LIGHTS | | | 20 | 1 | 0 | | | ** | * | | | *** | 14 |
| 15 | MAINTENANCE OFFICE LIGHTS | | | 20 | 1 | | 0 | | 20 | 1 | | | DRAFTING RM S WALL/FLR PLUGS L&T PLU | 16 |
| 17 | HOOD FAN CONTROL CIRCUIT | | | 20 | 1 | | | 0 | 20 | 1 | | | RECEPTION AREA & CONN HALL PLUGS | 18 |
| 19 | S & E WALL RECEPTS | | | 20 | 1 | 0 | | | 20 | 1 | | | | 20 |
| 21 | LAB SPARE | | | 20 | 1 | | 0 | | 20 | 1 | | | MAINT & MATERIALS OFFICE PLUGS | 22 |
| 23 | LAB ??? RECEPTS | | | 20 | 1 | | | 0 | 20 | 1 | | | SOILS LAB PLUGS WEST & EX FAN | 24 |
| 25 | ASPHALT LAB PLUGS & FUME HOODS | | | 20 | 1 | 0 | | | 20 | 1 | | | SOILS LAB PLUGS EAST & EX FAN | 26 |
| 27 | FUME HOODS & FANS | | | 20 | 1 | | 0 | | 30 | 2 | | | PRINTER | 28 |
| 29 | OVEN | | | 30 | 2 | | | 0 | ** | * | | | *** | 30 |
| 31 | *** | | | ** | * | 0 | | | 20 | 1 | | | ?? | 32 |
| 33 | NEW OVEN/FURNACE | | | 30 | 2 | | 0 | | 20 | 1 | | | ASPHALT LAB PLUGS | 34 |
| 35 | *** | | | ** | * | | | 0 | 20 | 1 | | | EXHAUST FAN | 36 |
| 37 | ?? | | | ?? | 3 | 0 | | | 20 | 2 | | | 240V FLOOR RECEPT | 38 |
| 39 | *** | | | ** | * | | 0 | | ** | * | | | *** | 40 |
| 41 | *** | | | ** | * | | | 0 | 20 | 1 | | | ?? | 42 |
| 43 | HOOD EXHAUST FAN | | 7.8 | 15 | 3 | 24.4 | | | 30 | 2 | 16.6 | | WATER HEATER | 44 |
| 45 | *** | | 7.8 | ** | * | | 24.4 | | ** | * | 16.6 | | *** | 46 |
| 47 | *** | | 7.8 | ** | * | | | 9.3 | 20 | 1 | 1.5 | | RECEPT - RECIRC PUMP | 48 |
| 49 | POWER EXHAUST | | 11.9 | 20 | 3 | 11.9 | | | 20 | 1 | | | SPARE | 50 |
| 51 | *** | | 11.9 | ** | * | | 11.9 | | 20 | 1 | | | SPARE | 52 |
| 53 | *** | | 11.9 | ** | * | | | 11.9 | 20 | 1 | | | SPARE | 54 |
| 55 | SPARE | | | 20 | 1 | 0 | | | 20 | 1 | | | SPARE | 56 |
| 57 | SPARE | | | 20 | 1 | | 0 | | 20 | 1 | | | SPARE | 58 |
| 59 | SPARE | | | 20 | 1 | | | 0 | 20 | 1 | | | SPARE | 60 |
| 61 | SPARE | | | 30 | 2 | 0 | | | 20 | 2 | | | SPARE | 62 |
| 63 | *** | | | ** | * | | 0 | | ** | * | | | *** | 64 |
| 65 | SPARE | | | 30 | 3 | | | 0 | 20 | 3 | | | SPARE | 66 |
| 67 | *** | | | ** | * | 0 | | | ** | * | | | *** | 68 |
| 69 | *** | | | ** | * | | 0 | | ** | * | | | *** | 70 |
| 71 | SPARE | | | 30 | 1 | | | 0 | 20 | 1 | | | SPARE | 72 |
| | | | | | | 36.3 | 36.3 | 21.2 | AMPS | | | | | |
| | | | | | | 4.4 | 4.4 | 2.5 | KW | | | 11.3 | TOTAL KW | |

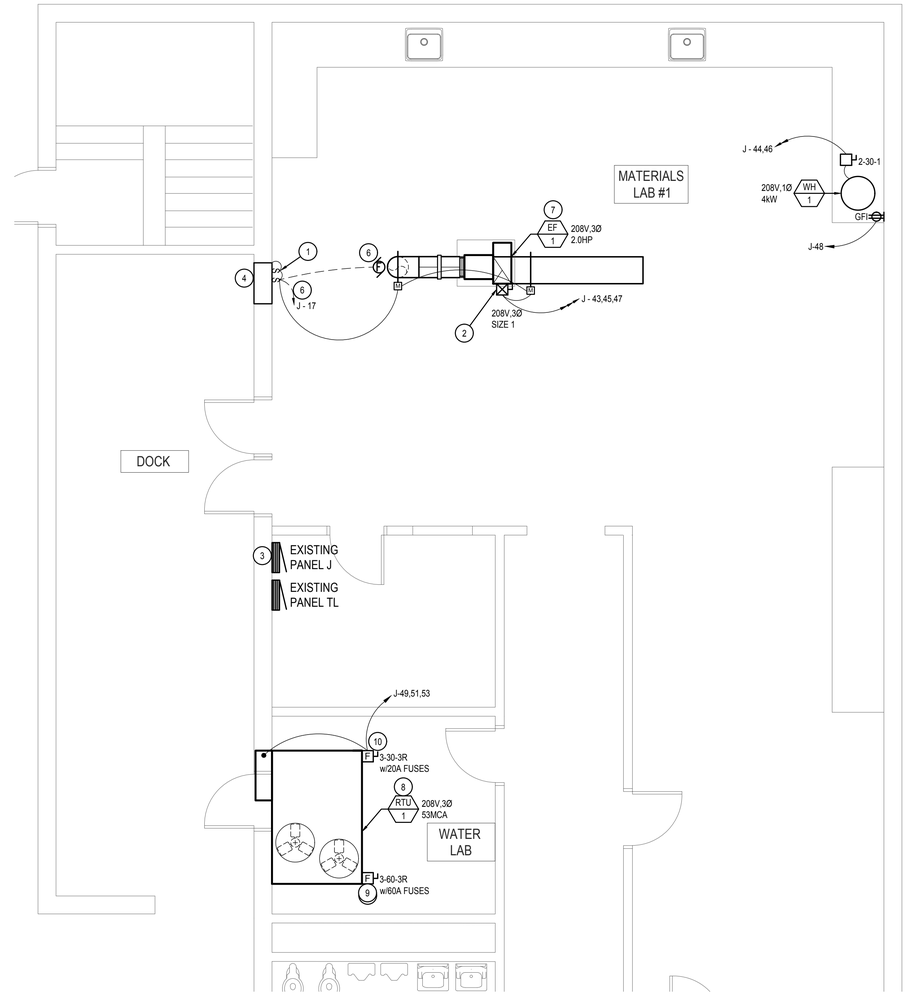


MATERIALS LAB #1 MECHANICAL POWER NEW WORK PLAN

1/4" = 1'-0"

NORTH

## KEYED NOTES:

(#) SYMBOL USED FOR NOTE CALLOUT.

1. INTERLOCK EXHAUST FAN WITH LOUVER FROM WALL SWITCH.
2. INSTALL COMBINATION MOTOR STARTER WITH 120 VOLT COIL, SQUARE D SCG13 OR EQUAL.
3. REPLACE EXISTING FLASH MOUNTED PANEL J WITH NEW SURFACE MOUNTED J. EXISTING PANEL J HAS A PANEL SKIRT THAT WILL NEED TO BE MODIFIED TO ALLOW ACCESS INSIDE SKIRT AFTER NEW PANEL INSTALLATION.
4. EXISTING LOUVER TO BE REMOVED.
5. REMOVE EXISTING SWITCHES AND INSTALL NEW COVE PLATE. INSTALL NEW SWITCH AT EXISTING LOCATION TO INTERLOCK EXHAUST FAN AND LOUVERS.
6. EXISTING EXHAUST FAN TO BE REMOVED. RE USE CIRCUIT J-17 AS CONTROL CIRCUIT FOR EXHAUST FAN AND LOUVERS.
7. SEE MECHANICAL DRAWING M3.0 FOR EXHAUST FAN CONTROL SCHEMATIC AND THIS DRAWING FOR EXHAUST FAN CONTROLS DIAGRAM.
8. DISCONNECT EXISTING ROOFTOP UNIT AND RECONNECT TO EXISTING FUSED DISCONNECT SWITCH.
9. EXISTING FUSED DISCONNECT TO REMAIN.
10. NEW FUSED DISCONNECT SWITCH FOR POWER EXHAUST.

| NO. | REVISIONS | DATE |
|---|---|---|
| | | |

PROFESSIONAL ENGINEER REGISTERED 13299 01/06/2020 STATE OF IDAHO MATTHEW N. BRADLEY


MUSGROVE ENGINEERING, P.A.
234 S. Whisperwood Way
Boise, Idaho 83709
208.384.0585
musgrovepa.com
OVER 40 YEARS OF EXCELLENCE


IDAHO TRANS. DEPT.
MATERIALS LAB MODIFICATION
206 N YELLOWSTONE HWY
RIGBY, IDAHO

| | |
|---|---|
| PROJECT | 20-230 |
| DRAWN | DH |
| CHECKED | MB |
| DATE | 20-11-06 |
| SCALE | SEE PLANS |
| SHEET | E1.0 |

| | | | | | |
|---|---|---|---|---|---|
| **PANEL:** | AL#1 (EXISTING) | **PROJECT:** | 20-230 IDAHO TRANS. DEPT. | | |
| **VOLTAGE:** | 240/120 HIGH-LEG | 3 **PH** | 4 **WIRE** | **AMPERE RATING:** 250 MBR | **SC RATING:** 65000 AIC |
| **CKT NOTES:**<br>1. EXISTING BREAKER<br>2. NEW BREAKER | | | | **REMARKS:** | **MOUNTING:** SURFACE |

| CKT | DESCRIPTION | CKT NOTE | LOAD AMPS | AMPS/ POLES | | PHASE (AMPS) A | B | C | AMPS/ POLES | | LOAD AMPS | CKT NOTE | DESCRIPTION | CKT |
|---|---|---|---|---|---|---|---|---|---|---|---|---|---|---|
| 1 | SPARE | 1 | | 20 | 1 | 0 | | | 20 | 1 | | 1 | WEST WALL OUTLETS | 2 |
| 3 | 120V OUTLET EAST WALL | 1 | | 20 | 1 | | 0 | | 20 | 1 | | 1 | ?? | 4 |
| 5 | LIGHTS & EAST WALL PLUGS | 1 | | 20 | 1 | | | 0 | 20 | 1 | | 1 | FURNACE | 6 |
| 7 | ?? | 1 | | 20 | 1 | 0 | | | 30 | 1 | | 1 | NCAT OVEN RECEPT | 8 |
| 9 | 120V OVEN | 1 | | 20 | 1 | | 0 | | ** | ** | | 1 | *** | 10 |
| 11 | NORTHWEST 120V OVEN OUTLET | 1 | | 20 | 1 | | | 7.8 | 20 | 1 | 7.8 | 2 | EXHAUST FAN EF-2 | 12 |
| 13 | BLANK | | | | 1 | 7.8 | | | ** | * | 7.8 | | *** | 14 |
| 15 | BLANK | | | | 1 | | 7.8 | | ** | * | 7.8 | | *** | 16 |
| 17 | BLANK | | | | 1 | | | 0 | 20 | 1 | | | SPARE | 18 |
| 19 | BLANK | | | | 1 | 0 | | | 20 | 1 | | | SPARE | 20 |
| 21 | BLANK | | | | 1 | | 0 | | 20 | 1 | | | SPARE | 22 |
| 23 | BLANK | | | | 1 | | | 0 | 20 | 1 | | | SPARE | 24 |
| | | | | | | 7.8 | 7.8 | 7.8 | AMPS | | | | | |
| | | | | | | 0.9 | 0.9 | 0.9 | KW | | | 2.81 | TOTAL KW | |

## KEYED NOTES:

(#) SYMBOL USED FOR NOTE CALLOUT.

1. INTERLOCK EXHAUST FAN WITH LOUVER FROM WALL SWITCH.

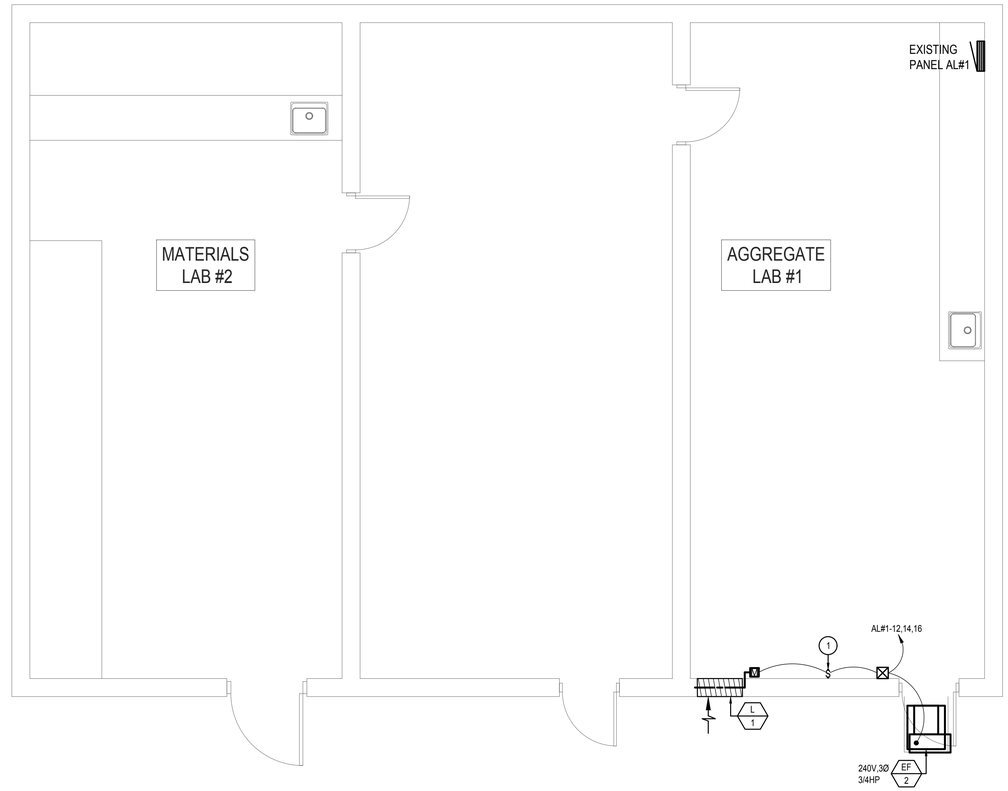


REMOTE MATERIALS LAB MECHANICAL POWER PLAN

1/4" = 1'-0"

NORTH

| NO. | REVISIONS | DATE |
|---|---|---|
| | | |

PROFESSIONAL ENGINEER REGISTERED 13299 01/06/2020 STATE OF IDAHO MATTHEW N. BRADLEY


MUSGROVE ENGINEERING, P.A.
234 S. Whisperwood Way
Boise, Idaho 83709
208.384.0585
musgrovepa.com
OVER 40 YEARS OF EXCELLENCE


IDAHO TRANS. DEPT.
MATERIALS LAB MODIFICATION
206 N YELLOWSTONE HWY
RIGBY, IDAHO

| | |
|---|---|
| PROJECT | 20-230 |
| DRAWN | DH |
| CHECKED | MB |
| DATE | 20-11-06 |
| SCALE | SEE PLANS |
| SHEET | E1.1 |

| PANEL: M(EXISITING) | PROJECT: 20-230 IDAHO TRANS. DEPT. | | |
|---|---|---|---|
| VOLTAGE: 240/120 HIGH-LEG | 3 PH 4 WIRE | AMPERE RATING: 400 MBR | SC RATING: 10000 AIC |
| CKT NOTES: 1. EXISTING BREAKER 2. NEW BREAKER | | REMARKS: | MOUNTING: SURFACE |

| CKT | DESCRIPTION | CKT NOTE | LOAD AMPS | AMPS/ POLES | | PHASE (AMPS) A | B | C | AMPS/ POLES | | LOAD AMPS | CKT NOTE | DESCRIPTION | CKT |
|---|---|---|---|---|---|---|---|---|---|---|---|---|---|---|
| 1 | PANEL AL2 | 2 | | 200 | 3 | 0 | | | 20 | 1 | | 1 | SPARE | 13 |
| | *** | 2 | | ** | * | | 0 | | | | | | BLANK | |
| | *** | 2 | | ** | * | | | 0 | | | | | BLANK | |
| | BLANK | | | | | 0 | | | | | | | BLANK | |
| | BLANK | | | | | | 0 | | | | | | BLANK | |
| | BLANK | | | | | | | 0 | 150 | 3 | | 1 | RADIO SHOP | 17 |
| | BLANK | | | | | 0 | | | ** | * | | 1 | *** | |
| | BLANK | | | | | | 0 | | ** | * | | 1 | *** | |
| 2 | ? | 1 | | 60 | 2 | | | 0 | 20 | 1 | | 1 | NEW ADDITION LIGHT AND RECEPT | 18 |
| | *** | 1 | | ** | * | 0 | | | 100 | 3 | | 1 | WELL AREA PANEL | 19 |
| 6 | SPARE | 1 | | 60 | 2 | | 0 | | ** | * | | 1 | *** | |
| | *** | 1 | | ** | * | | | 0 | ** | * | | 1 | *** | |
| 7 | SPARE | 1 | | 20 | 3 | 0 | | | 60 | 3 | | 1 | ELECTRICAL SHOP | 20 |
| | *** | 1 | | ** | * | | 0 | | ** | * | | 1 | *** | |
| | *** | 1 | | ** | * | | | 0 | ** | * | | 1 | *** | |
| 8 | SPARE | 1 | | 20 | 1 | 0 | | | 60 | 3 | | 1 | ELECTRICAL GARAGE | 21 |
| 9 | SPARE | 1 | | 20 | 1 | | 0 | | ** | * | | 1 | *** | |
| 10 | ISLAND PANEL RECEPTS | 1 | | 200 | 2 | | | 0 | ** | * | | 1 | *** | |
| | *** | 1 | | ** | * | 0 | | | 80 | 3 | | 1 | WELL AREA PANEL | 22 |
| | | 1 | | | | | 0 | | ** | * | | 1 | *** | |
| 11 | ? | 1 | | 20 | 1 | | | 0 | ** | * | | 1 | *** | |
| 12 | LAB PANEL | 1 | | 200 | 3 | 0 | | | 100 | 3 | | 1 | COMPRESSOR | 23 |
| | *** | 1 | | ** | * | | 0 | | ** | * | | 1 | *** | |
| | *** | 1 | | ** | * | | | 0 | ** | * | | 1 | *** | |
| | | | | | | 0.0 | 0.0 | 0.0 | AMPS | | | | | |
| | | | | | | 0.0 | 0.0 | 0.0 | KW | | | | 0 TOTAL KW | |

| PANEL: AL#2 NEW | PROJECT: 20-230 IDAHO TRANS. DEPT. | | |
|---|---|---|---|
| VOLTAGE: 240/120 HIGH-LEG | 3 PH 4 WIRE | AMPERE RATING: 200 MLO | SC RATING: 10000 AIC |
| CKT NOTES: | | REMARKS: | MOUNTING: SURFACE |

| CKT | DESCRIPTION | CKT NOTE | LOAD AMPS | AMPS/ POLES | | PHASE (AMPS) A | B | C | AMPS/ POLES | | LOAD AMPS | CKT NOTE | DESCRIPTION | CKT |
|---|---|---|---|---|---|---|---|---|---|---|---|---|---|---|
| 1 | EXHAUST FAN | | 7.8 | 20 | 1 | 7.8 | | | 20 | 1 | | | SPARE | 2 |
| 3 | *** | | 7.8 | ** | * | | 7.8 | | 20 | 1 | | | SPARE | 4 |
| 5 | *** | | 7.8 | ** | * | | | 7.8 | 20 | 1 | | | SPARE | 6 |
| 7 | SPARE | | | 20 | 1 | 0 | | | 20 | 1 | | | SPARE | 8 |
| 9 | SPARE | | | 30 | 1 | | 0 | | 20 | 1 | | | SPARE | 10 |
| 11 | SPARE | | | 30 | 1 | | | 0 | 20 | 2 | | | SPARE | 12 |
| 13 | SPARE | | | 20 | 2 | 0 | | | ** | * | | | *** | 14 |
| 15 | *** | | | ** | * | | 0 | | 20 | 2 | | | SPARE | 16 |
| 17 | SPARE | | | 20 | 2 | | | 0 | ** | * | | | *** | 18 |
| 19 | *** | | | ** | * | 0 | | | 20 | 3 | | | SPARE | 20 |
| 21 | SPARE | | | 20 | 3 | | 0 | | ** | * | | | *** | 22 |
| 23 | *** | | | ** | * | | | 0 | ** | * | | | *** | 24 |
| 25 | *** | | | ** | * | 0 | | | 20 | 3 | | | SPARE | 26 |
| 27 | SPARE | | | 20 | 3 | | 0 | | ** | * | | | *** | 28 |
| 29 | *** | | | ** | * | | | 0 | ** | * | | | *** | 30 |
| 31 | *** | | | ** | * | 0 | | | 30 | 2 | | | SPARE | 32 |
| 33 | SPARE | | | 30 | 3 | | 0 | | ** | * | | | *** | 34 |
| 35 | *** | | | ** | * | | | 0 | 30 | 2 | | | SPARE | 36 |
| 37 | *** | | | ** | * | 0 | | | ** | * | | | *** | 38 |
| 39 | SPARE | | | 30 | 2 | | 0 | | 30 | 2 | | | SPARE | 40 |
| 41 | *** | | | ** | * | | | 0 | ** | * | | | *** | 42 |
| | | | | | | 7.8 | 7.8 | 7.8 | AMPS | | | | | |
| | | | | | | 0.9 | 0.9 | 0.9 | KW | | | | 2.81 TOTAL KW | |

## KEYED NOTES:

(#) SYMBOL USED FOR NOTE CALLOUT.

1. INTERLOCK EXHAUST FAN WITH LOUVER FROM WALL SWITCH.
2. INSTALL COMBINATION MOTOR STARTER WITH 120 VOLT COIL, SQUARE D SCG13 OR EQUAL.

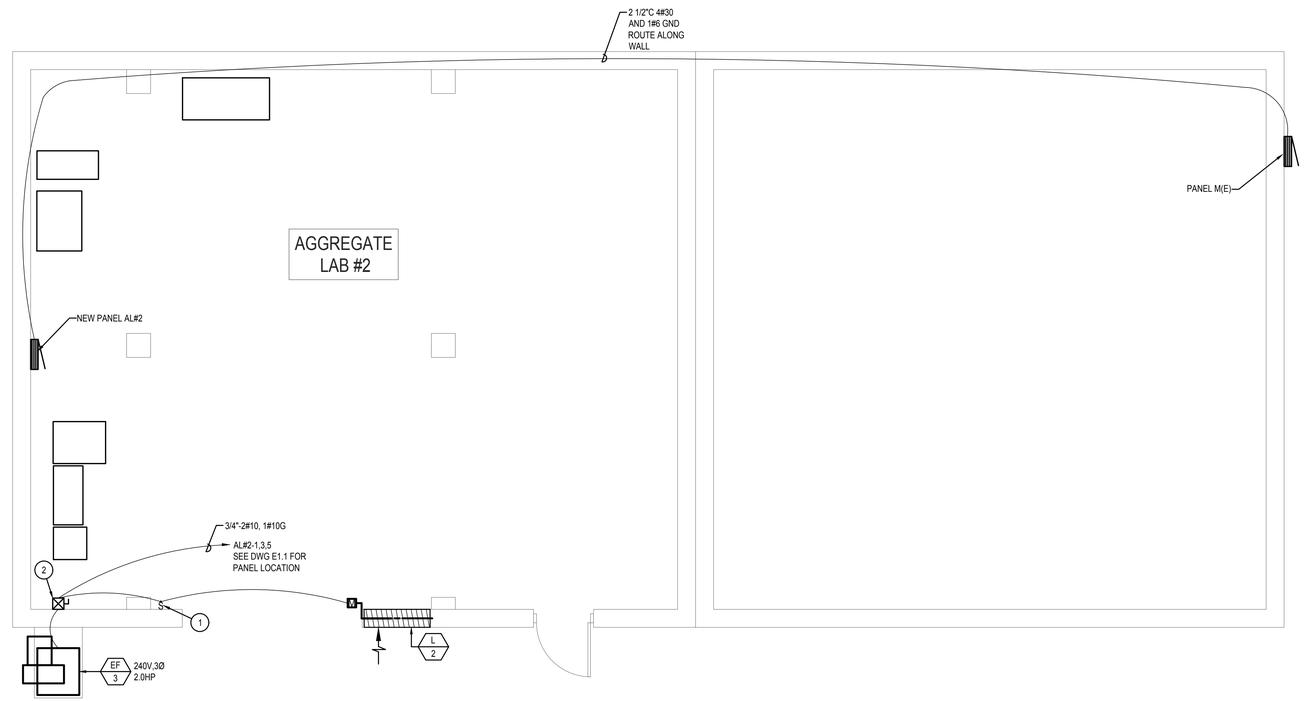


## AGGREGATE MATERIALS LAB MECHANICAL POWER PLAN

1/4" = 1'-0"

NORTH

| NO. | REVISIONS | DATE |
|---|---|---|
| | | |

PROFESSIONAL ENGINEER REGISTERED 13299 STATE OF IDAHO MATTHEW N. BRADLEY 01/06/2020


MUSGROVE ENGINEERING, P.A.
234 S. Whisperwood Way
Boise, Idaho 83709
208.384.0585
musgrovepa.com
OVER 40 YEARS OF EXCELLENCE


IDAHO TRANS. DEPT.
MATERIALS LAB MODIFICATION
206 N YELLOWSTONE HWY
RIGBY, IDAHO

| | |
|---|---|
| PROJECT | 20-230 |
| DRAWN | DH |
| CHECKED | MB |
| DATE | 20-11-06 |
| SCALE | SEE PLANS |
| SHEET | E1.2 |

# MECHANICAL ABBREVIATIONS

| | | | |
|---|---|---|---|
| A/C or AC | AIR CONDITIONING | KW | KILOWATT |
| AFF | ABOVE FINISHED FLOOR | KWH | KILOWATT HOUR |
| AHU | AIR HANDLING UNIT | | |
| ASHRAE | AMERICAN SOCIETY OF HEATING, REFRIGERATION, AND AIR CONDITIONING ENGINEERS | LAT | LEAVING AIR TEMPERATURE |
| | | LAV | LAVATORY |
| BTU | BRITISH THERMAL UNITS | LEED | LEADERSHIP IN ENERGY AND ENVIRONMENTAL DESIGN |
| BTUH | BTUS PER HOUR | LWT | LEAVING WATER TEMPERATURE |
| CA | COMBUSTION AIR | MAX | MAXIMUM |
| CC | COOLING COIL | MCA | MINIMUM CIRCUIT AMPS |
| CFM | AIR FLOW RATE (CUBIC FEET PER MINUTE) | MOCP | MAXIMUM OVERCURRENT PROTECTION |
| CHWR | CHILLED WATER RETURN | MIN | MINIMUM |
| CHWS | CHILLED WATER SUPPLY | | |
| CLG | CEILING | NC | NOISE CRITERIA |
| CW | COLD WATER | NFPA | NATIONAL FIRE PROTECTION ASSOCIATION |
| | | NTS | NOT TO SCALE |
| DEG or ° | DEGREE | | |
| DIA or Ø | DIAMETER | OSA | OUTSIDE AIR |
| DB | DRY BULB | | |
| | | PD | PRESSURE DROP |
| EA | EXHAUST AIR | PH or Ø | PHASE |
| EAT | ENTERING AIR TEMPERATURE | PRV | PRESSURE REDUCING VALVE |
| EER | ENERGY EFFICIENCY RATIO | | |
| ESP | EXTERNAL STATIC PRESSURE | RA | RETURN AIR |
| EWT | ENTERING WATER TEMPERATURE | RPM | REVOLUTIONS PER MINUTE |
| | | RTU | ROOFTOP UNIT |
| FCO | FLOOR CLEANOUT | | |
| FD | FIRE DAMPER | SA | SUPPLY AIR |
| FLA | FULL LOAD AMPS | SEER | SEASONAL ENERGY EFFICIENCY RATIO |
| FLR | FLOOR | SFD | COMBINATION SMOKE/FIRE DAMPER |
| FPM | FEET PER MINUTE | SP | STATIC PRESSURE |
| FT | FEET | SYM | SYMBOL |
| GA | GAUGE | T & P | TEMPERATURE AND PRESSURE |
| GCO | GRADE CLEANOUT | TEMP | TEMPERATURE |
| GPM | WATER FLOW RATE (GALLONS PER MINUTE) | TYP | TYPICAL |
| HC | HEATING COIL | UMC | UNIFORM MECHANICAL CODE |
| HP | HORSE POWER | UPC | UNIFORM PLUMBING CODE |
| HVAC | HEATING, VENTILATING, AIR CONDITIONING | URL | URINAL |
| HW | HOT WATER | | |
| HWR | HOT WATER RETURN | VTR | VENT THROUGH ROOF |
| HWS | HOT WATER SUPPLY | V | VOLTS |
| IBC | INTERNATIONAL BUILDING CODE | W/ | WITH |
| IEEC | INTERNATIONAL ENERGY CONSERVATION CODE | WB | WET-BULB |
| IFC | INTERNATIONAL FIRE CODE | WC | WATER CLOSET |
| IFGC | INTERNATIONAL FUEL GAS CODE | WCO | WALL CLEANOUT |
| IMC | INTERNATIONAL MECHANICAL CODE | WH | WATER HEATER |
| IPC | INTERNATIONAL PLUMBING CODE | | |

NOTE: THIS IS A STANDARD LIST OF COMMONLY USED MECHANICAL ABBREVIATIONS. SOME OF THE ABBREVIATIONS SHOWN ABOVE MAY NOT BE USED IN THIS DRAWING PACKAGE.

# MECHANICAL GENERAL NOTES

1. ALL MECHANICAL EQUIPMENT AND SYSTEMS SHALL BE INSTALLED IN ACCORDANCE WITH THE INTERNATIONAL MECHANICAL CODE (IMC) LATEST EDITION, AND ALL LOCAL & STATE CODES.
2. ALL PLUMBING EQUIPMENT AND SYSTEMS SHALL BE INSTALLED IN ACCORDANCE WITH THE LATEST ADOPTED PLUMBING CODE, AND ALL LOCAL & STATE CODES.
3. ALL MECHANICAL AND PLUMBING EQUIPMENT SHALL BE INSTALLED PER THE MANUFACTURER'S RECOMMENDATIONS.
4. MECHANICAL CONTRACTORS SHALL RECEIVE PRIOR APPROVAL FROM THE STRUCTURAL ENGINEER BEFORE MAKING CUTS THROUGH ANY STRUCTURAL MEMBER.
5. MECHANICAL CONTRACTORS SHALL COORDINATE INSTALLATION WITH CONSTRUCTION SUPERVISOR AND WITH ALL OTHER TRADES TO AVOID CONFLICTS.
6. THE MECHANICAL CONTRACTORS SHALL VERIFY MOTOR VOLTAGES WITH THE ELECTRICAL DRAWINGS BEFORE ORDERING MOTORIZED EQUIPMENT AND CONTROLS.
7. SEE MECHANICAL SCHEDULE SHEET FOR SCHEDULED CAPACITIES OF ALL MECHANICAL EQUIPMENT AND MATERIALS SPECIFIED.
8. THE EXISTING DOMESTIC WATER SERVICE IS PROVIDED WITH BACKFLOW PREVENTER.
9. ALL MECHANICAL EQUIPMENT TO BE PROPOSED MUST BE ON THE APPROVED LIST PRIOR TO SUBMITTALS. ALL APPROVED MANUFACTURERS MUST BE CAPABLE OF MEETING THE REQUIREMENTS OF THE SPECIFIED EQUIPMENT.
10. RUNOUT AND HOOKUP SIZES TO INDIVIDUAL PLUMBING FIXTURE CAN BE FOUND ON THE PLUMBING FIXTURE SCHEDULE.
11. PROVIDE REMOTE CEILING ACCESS BALANCE DAMPERS WITH CONCEALED CHROME PLATE COVERS FOR BALANCE DAMPERS LOCATED ABOVE HARD CEILINGS.
12. PAINT ALL FLUES AND OTHER MECHANICAL ITEMS ON THE ROOF TO MATCH THE ROOF COLOR.
13. MAINTAIN MINIMUM OF 10'-0" DISTANCE BETWEEN ALL FRESH AIR INTAKES AND EXHAUST OR GAS FLUE DISCHARGES.
14. THE PLUMBING CONTRACTOR IS RESPONSIBLE FOR ALL BACKFLOW DEVICES TO BE INSPECTED BY A CERTIFIED BACKFLOW TECHNICIAN BEFORE THE USE OF THE BUILDING POTABLE WATER SYSTEM.
15. THE CONTRACTOR SHALL BE HELD RESPONSIBLE FOR VERIFICATION OF EXISTING JOB CONDITIONS PRIOR TO BID. NO ADDITIONAL COST SHALL BE AWARDED TO THE SUCCESSFUL CONTRACTOR (OR THEIR SUBCONTRACTORS) AFTER BIDS HAVE BEEN SUBMITTED AND CONTRACTS AWARDED FOR FAILURE TO VERIFY EXISTING FIELD CONDITIONS. DISCREPANCIES BETWEEN ACTUAL FIELD CONDITIONS AND CONTRACT DOCUMENTS SHALL BE BROUGHT TO THE ENGINEERS ATTENTION FOR ALTERNATIVE METHODS OF INSTALLATION PRIOR TO THE BIDDING OF THIS PROJECT.
16. UNLESS OTHERWISE NOTED ALL EXISTING MECHANICAL EQUIPMENT, PIPING, ETC, TO BE REMOVED SHALL BE DISPOSED OF BY THE CONTRACTOR UNDER THIS CONTRACT. THE OWNER SHALL RETAIN THE RIGHT TO KEEP ANY REMOVED ITEMS.
17. ALL DOMESTIC COLD AND HOT WATER LINES IN THE AREA OF WORK WHICH ARE NO LONGER IN USE DUE TO THIS PROJECT SHALL BE REMOVED BACK TO THE MAINS AND CAPPED.
18. HOLES IN EXISTING WALL OR FLOORS SHALL BE PATCHED TO MATCH EXISTING WHERE PIPING, DUCTWORK, ETC. WERE REMOVED OR ADDED DURING THIS PROJECT.
19. DAMAGE TO THE EXISTING FACILITY DURING THE CONSTRUCTION SHALL BE REPAIRED OR REPLACED BY THE CONTRACTOR AT NO COST TO THE OWNER.

# MECHANICAL AND PLUMBING DRAWINGS LEGEND

| | | | |
|---|---|---|---|
| | FLEXIBLE DUCTWORK | | THREE WAY CONTROL VALVE |
| | DUCTWORK | | TWO WAY CONTROL VALVE |
| | DUCTWORK BREAK | | PRESSURE REDUCING VALVE |
| | DUCTWORK OR PIPING RISE | | GATE VALVE |
| | CONCENTRIC SQUARE TO ROUND TRANSITION | | REDUCER |
| M | MOTORIZED DAMPER | | GLOBE VALVE |
| | MANUAL VOLUME DAMPER | | BALL VALVE |
| AIRFLOW | SPIN-IN FITTING W/ AIR EXTRACTOR AND HAND DAMPER | | BUTTERFLY VALVE |
| AIRFLOW | HIGH EFFICIENCY FITTING W/ HAND DAMPER | | BALANCE VALVE |
| $ | SWITCH | | CHECK VALVE |
| T | THERMOSTAT | FCO | FLOOR CLEANOUT |
| H | HUMIDISTAT | WCO | WALL CLEANOUT |
| S | TEMPERATURE SENSOR | GCO | GRADE CLEANOUT |
| CO2 | CARBON DIOXIDE SENSOR | | WATER HAMMER ARRESTOR |
| CO | CARBON MONOXIDE SENSOR | | FLOOR DRAIN |
| NO | NITROUS OXIDE SENSOR | | FLOOR SINK |
| SD | DUCT SMOKE DETECTOR | | GAS PRESSURE REGULATOR W/ GAS COCK |
| SFD | COMBINATION SMOKE/FIRE DAMPER | | PRESSURE RELIEF VALVE |
| FD | FIRE DAMPER | | VENT-THROUGH-ROOF |
| SD | SMOKE DAMPER | | VENT |
| # | EQUIPMENT CALLOUT | | SOIL, WASTE, OR SANITARY SEWER |
| | TURNING VANES | AW | ACID WASTE LINE |
| | INTAKE OR EXHAUST | AV | ACID VENT LINE |
| | DIRECTION OF AIRFLOW | SD | STORM DRAIN |
| D-X CFM X"Ø | SUPPLY DIFFUSER | RD | ROOF DRAIN LINE |
| R-X X"Ø | RETURN GRILLE | OD | OVERFLOW DRAIN LINE |
| R-X CFM X"Ø | EXHAUST GRILLE | CD | CONDENSATE DRAIN LINE |
| G-X CFM X"Ø | FLOOR GRILLE | | DOMESTIC COLD WATER (CW) |
| | CEILING EXHAUST FAN | | DOMESTIC HOT WATER (HW) |
| | TEMPERATURE GAUGE | | DOMESTIC HOT WATER RETURN (HWR) |
| | PRESSURE GAUGE (LIQUID FILLED W/ ISOLATION VALVE) | TW | TEMPERED WATER (TW) |
| TS | TEMPERATURE SENSOR (DUCT OR PIPING) | MPG | MEDIUM PRESSURE NATURAL GAS |
| FS | FLOW SWITCH | G | LOW PRESSURE NATURAL GAS |
| | STAINLESS STEEL BRAIDED FLEX CONNECTION | F | FIRE SPRINKLER LINE |
| | ELASTOMETRIC FLEX CONNECTOR | GWS | GEOTHERMAL WATER SUPPLY |
| | SUCTION DIFFUSER | GWR | GEOTHERMAL WATER RETURN |
| | Y TYPE STRAINER (1 1/2" OR LARGER PROVIDED W/ BLOW DOWN VALVE) | CWS | CHILLED WATER SUPPLY |
| | FLOW DIRECTION | CWR | CHILLED WATER RETURN |
| | DEMOLITION / EQUIPMENT TO BE REMOVED | CS | CONDENSER WATER SUPPLY |
| | NEW TO EXISTING CONNECTION POINT | CR | CONDENSER WATER RETURN |
| (E) | EXISTING | HWS | HEATING WATER SUPPLY |
| (F) | FUTURE | HWR | HEATING WATER RETURN |
| (N) | NEW | L | LIQUID REFRIGERANT LINE |
| | REDUCED PRESSURE BACKFLOW PREVENTER | S | SUCTION REFRIGERANT LINE |
| | DOUBLE CHECK BACKFLOW PREVENTER | | SLOPE PIPE IN DIRECTION OF ARROW |
| | UNION | | PIPE ANCHOR |
| | AIR VENT | | PIPE GUIDE |
| | TRIPLE DUTY VALVE | | CAP |

NOTE: THIS IS A LIST OF COMMONLY USED MECHANICAL AND PLUMBING SYMBOLS. SOME OF THE SYMBOLS SHOWN ABOVE MAY NOT BE USED IN THIS DRAWING PACKAGE.

# ENERGY CODE COMPLIANCE

A. COMPLIANCE WITH THE LATEST ADOPTED EDITION OF THE INTERNATIONAL ENERGY CONSERVATION CODE IS REQUIRED FOR THIS PROJECT. THESE NOTES COVER MANDATORY REQUIREMENTS OF THE CODE. ADDITIONAL REQUIREMENTS ARE NOTED ON THE DRAWINGS AND IN THE SPECIFICATIONS.

B. MINIMUM REQUIREMENTS FOR SUPPLY AND RETURN DUCTWORK INSULATION:

1. R-6: DUCTS LOCATED IN UNCONDITIONED SPACES (SPACE NEITHER HEATED NOR COOLED SUCH AS ABOVE CEILING SPACES, WALL SPACES, DUCT CHASES, SOFFITS, ATTICS, CRAWL SPACES, UNHEATED BASEMENTS, AND UNHEATED GARAGES).
2. R-12: DUCTS LOCATED OUTSIDE OF THE BUILDING'S INSULATION ENVELOPE (SUCH AS ABOVE THE ATTIC INSULATION).

TYPICAL INSULATION THICKNESS REQUIRED TO MEET THESE REQUIREMENTS:

1. FIBERGLASS DUCT WRAP: R-6, R-12.
2. FIBERGLASS DUCT LINER: R-6, R-12.

C. CONTRACTOR SHALL VERIFY WITH THE MANUFACTURER, THE R-VALUES OF THE ACTUAL INSULATION USED. R-VALUES SHALL BE INSTALLED VALUES.

D. ALL DUCT JOINTS, SEAMS, AND CONNECTIONS SHALL BE FASTENED AND SEALED WITH WELDS, GASKETS, ADHESIVES, MASTIC-PLUS-EMBEDDED-FABRIC SYSTEMS, OR TAPES. TAPES AND MASTICS SHALL BE LISTED AND LABELED PER UL181A OR UL181B. DUCT TAPE IS NOT PERMITTED AS A SEALANT ON ANY METAL DUCTS. DUCT CONNECTIONS TO FLANGES OR EQUIPMENT SHALL BE SEALED AND MECHANICALLY FASTENED.

G. DOMESTIC HOT WATER PIPING SYSTEMS SHALL BE INSULATED WITH 1" INSULATION HAVING A CONDUCTIVITY NOT EXCEEDING 0.27 BTU-INCH/HOUR-FT2-°F.

H. DOMESTIC WATER HEATERS WHICH ARE NOT PROVIDED WITH INTEGRAL HEAT TRAPS AND SERVE NONCIRCULATING SYSTEMS SHALL BE PROVIDED WITH HEAT TRAPS ON THE SUPPLY AND DISCHARGE PIPING AT THE WATER HEATER.

I. AN OPERATING AND MAINTENANCE MANUAL SHALL BE PROVIDED PRIOR TO ISSUANCE OF A CERTIFICATE OF OCCUPANCY. THE O&M MANUAL SHALL CONTAIN THE FOLLOWING INFORMATION AS A MINIMUM:

1. EQUIPMENT CAPACITY (INPUT & OUTPUT).
2. EQUIPMENT OPERATING AND MAINTENANCE INSTRUCTIONS.
3. CONTROL SYSTEM MAINTENANCE AND CALIBRATION INFORMATION, INCLUDING WIRING DIAGRAMS, SCHEMATICS, AND CONTROL SEQUENCES.
4. CONTROL SYSTEM SETPOINTS SHALL BE SHOWN ON CONTROL DRAWINGS, AT CONTROL DEVICES, OR IN PROGRAMMING COMMENT ON DDC SYSTEMS.
5. A COMPLETE WRITTEN NARRATIVE ON HOW EACH MECHANICAL SYSTEM IS INTENDED TO OPERATE.

**COM*check* Software Version COMcheckWeb**

## Mechanical Compliance Certificate

**Project Information**

Energy Code: 2015 IECC
Project Title: ITD D6 Lab Modification
Location: Rigby, Idaho
Climate Zone: 6b
Project Type: Alteration

Construction Site: 206 N. Yellowstone Hwy. Rigby, Idaho 83442
Owner/Agent:
Designer/Contractor:

**Mechanical Systems List**

| Quantity | System Type & Description |
|---|---|
| 1 | RTU-1 (Multiple-Zone):<br>Heating: 1 each - Central Furnace, Gas, Capacity = 256 kBtu/h<br>Proposed Efficiency = 80.00% Et, Required Efficiency: 80.00 % Et<br>Cooling: 1 each - Single Package DX Unit, Capacity = 115 kBtu/h, Air-Cooled Condenser, Air Economizer<br>Proposed Efficiency = 11.50 EER, Required Efficiency: 11.00 EER + 12.6 IEER<br>Fan System: FAN SYSTEM 1 -- Compliance (Motor nameplate HP method) : Passes<br><br>Fans:<br>EF Exhaust, Constant Volume, 4000 CFM, 2.0 motor nameplate hp, 0.9 fan efficiency grade<br>SF Supply, Constant Volume, 4000 CFM, 2.0 motor nameplate hp, 0.9 fan efficiency grade |

**Mechanical Compliance Statement**

*Compliance Statement:* The proposed mechanical alteration project represented in this document is consistent with the building plans, specifications, and other calculations submitted with this permit application. The proposed mechanical systems have been designed to meet the 2015 IECC requirements in COM*check* Version COMcheckWeb and to comply with any applicable mandatory requirements listed in the Inspection Checklist.

Chris Dyke, PE — Name - Title
Christopher Dyke — Signature
11/4/2020 — Date

Project Title: ITD D6 Lab Modification
Data filename:
Report date: 11/04/20
Page 4 of 11

| NO. | REVISIONS | DATE |
|---|---|---|
| | | |

PROFESSIONAL ENGINEER — LICENSED — Christopher Dyke — 16683 — 11/6/2020 — STATE OF IDAHO — CHRISTOPHER DYKE


MUSGROVE ENGINEERING, P.A.
234 S. Whisperwood Way
Boise, Idaho 83709
208.384.0585
musgrovepa.com
OVER 40 YEARS OF EXCELLENCE


IDAHO TRANS. DEPT.
MATERIALS LAB MODIFICATION
206 N YELLOWSTONE HWY
RIGBY, IDAHO

| | |
|---|---|
| PROJECT | 20-230 |
| DRAWN | CD |
| CHECKED | TN |
| DATE | 20-11-06 |
| SCALE | SEE PLANS |
| SHEET | M0.0 |

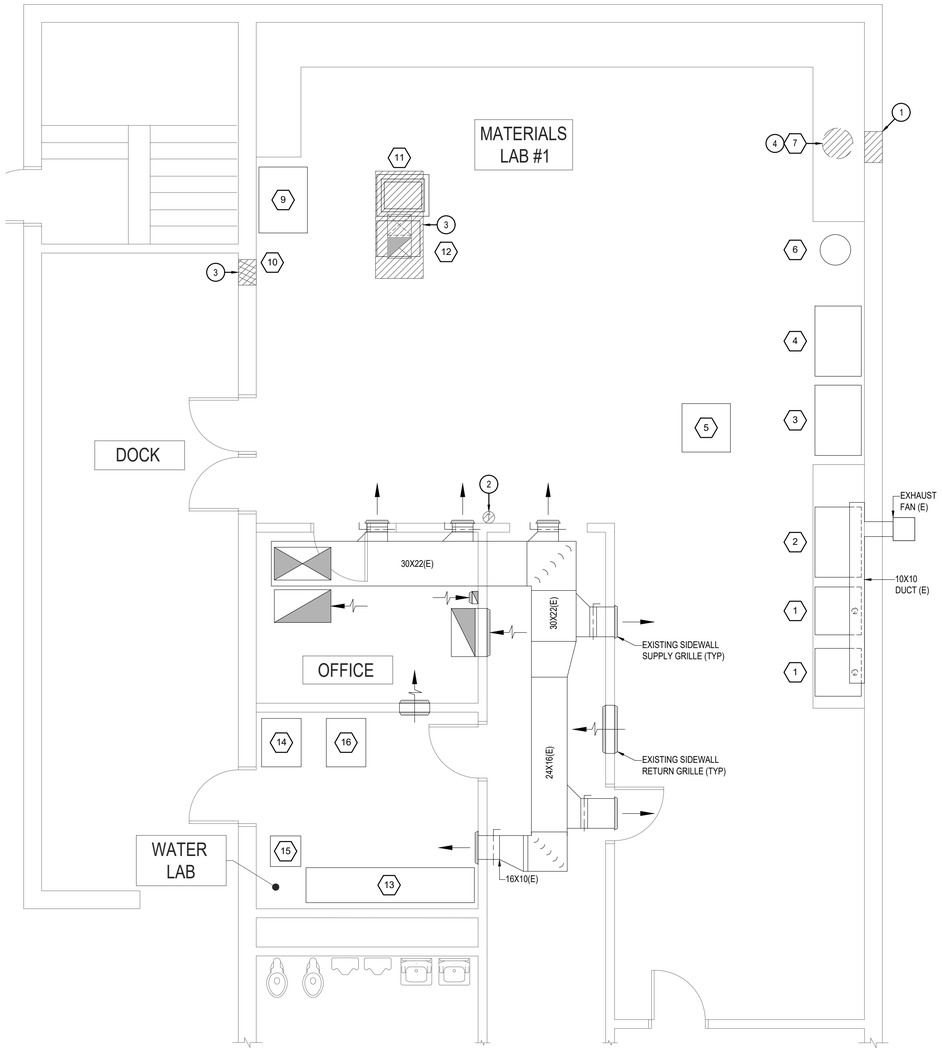


## MATERIALS LAB #1 MECHANICAL DEMOLITION PLAN

1/4" = 1'-0"

NORTH

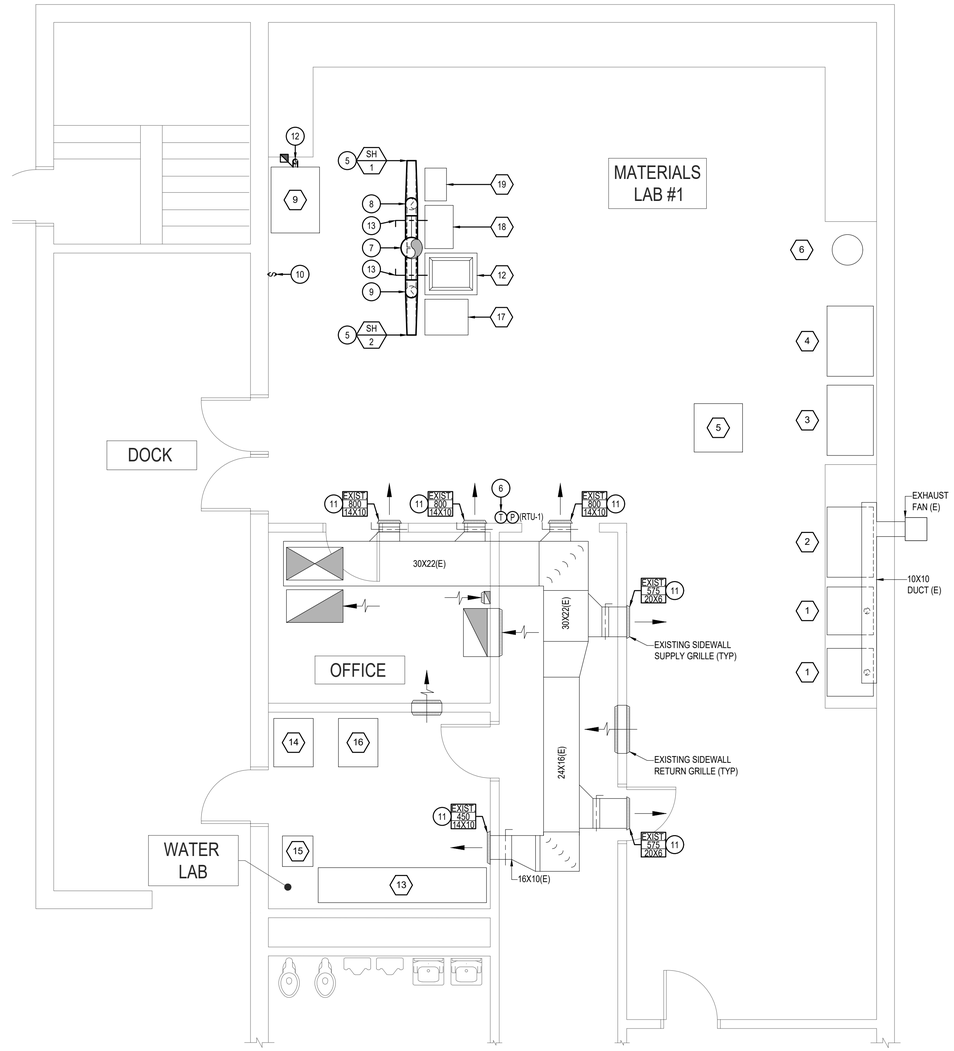


## MATERIALS LAB #1 MECHANICAL NEW WORK PLAN

1/4" = 1'-0"

NORTH

## KEYED NOTES:

(#) SYMBOL USED FOR NOTE CALLOUT.

1. REMOVE EXISTING WALL FAN AND ALL ASSOCIATED COMPONENTS. CONTRACTOR SHALL INSULATE AND PATCH WALL TO MATCH EXISTING COLOR AND CONDITION.
2. REMOVE EXISTING THERMOSTAT. EXISTING CONDUIT TO REMAIN.
3. REMOVE EXISTING HOOD AND EXHAUST DUCT. CONTRACTOR SHALL SEAL HOLE IN ROOF UNTIL NEW UNIT IS INSTALLED.
4. RELOCATE EXISTING SULFUR COOKER. COORDINATE WITH OWNER FOR NEW LOCATION.
5. NEW 58" SLOT HOOD TO CAPTURE SOURCE DUST/FUMES. CONTRACTOR SHALL FIELD VERIFY EXISTING CONDITIONS PRIOR TO BID.
6. NEW THERMOSTAT AND ROOM PRESSURE SENSOR. REUSE EXISTING CONDUIT.
7. ROUTE NEW COMMON 14"Ø EXHAUST DUCT TO ROOF ABOVE. SEE SHEET M2.0 FOR CONTINUATION.
8. ROUTE NEW 8"Ø EXHAUST DUCT ABOVE SLOT HOOD (SH-1) AND INTO COMMON 14"Ø EXHAUST DUCT. SEE DETAIL #4 ON SHEET M3.1 FOR REQUIREMENTS.
9. ROUTE NEW 8"Ø EXHAUST DUCT ABOVE SLOT HOOD (SH-2) AND INTO COMMON 14"Ø EXHAUST DUCT. SEE DETAIL #5 ON SHEET M3.1 FOR REQUIREMENTS.
10. WALL SWITCH TO CONTROL NEW EXHAUST FAN.
11. BALANCE EXISTING GRILLE TO INDICATED AIRFLOW.
12. NEW 3" SCHEDULE 80 STEEL VENT FROM ACID WASTE CABINET. VENT TO ROOF AND PROVIDE TURNED DOWN NECK WITH STAINLESS STEEL INSECT SCREEN. SEAL AROUND ROOF PENETRATION.
13. MANUAL BALANCE DAMPER. SEE DETAIL #2 ON SHEET M3.1 FOR REQUIREMENTS.

## EXISTING MATERIALS LAB EQUIPMENT LIST:

1. NCAT ASPHALT CONTENT TESTER - HIGH TEMP OVEN - THERMOLYNE.
2. COUNTERTOP VWR OVEN (300-400°F).
3. FLOOR MOUNTED VWR OVEN (300-400°F).
4. FLOOR MOUNTED DESPATCH LBB/LEB SERIES OVEN (300-400°F).
5. PLINE INSTRUMENT COMPANY - GYRATORY COMPACTOR - MODEL AFG1A.
6. EMERGENCY SHOWER & EYE WASH STATION.
7. UNDERCOUNTER SULFER COOKER WITH SIDEWALL FAN. CONTROLLED BY SEPARATE SWITCH.
8. SINGLE BOWL DEEP LAB SINK. SEDIMENT TRAP BELOW SINK FOR DRAIN.
9. CHEMICAL ACID CABINET.
10. EXHAUST FAN FOR GENERAL EXHAUST. CONTROLLED WITH SEPARATE SWITCH ON WALL FOR CONTROL.
11. HOOD 72" X 32" HOOD WITH FAN AT ROOF. CONTROLLED WITH SEPARATE WALL SWITCH.
12. MATERIALS SIFTING MACHINE.
13. WATER TANK - TESTING OF SAMPLES.
14. WET SAW TO CUT CONCRETE SAMPLES.
15. CONCRETE GRINDER - WET TYPE.
16. MATERIAL CRUSHER.
17. CLEANING RACK
18. GILSON SP-1 SPLITTER
19. GILSON SP-2 SPLITTER

| NO. | REVISIONS | DATE |
|---|---|---|
| | | |

PROFESSIONAL ENGINEER LICENSED 16683 11/6/2020 STATE OF IDAHO CHRISTOPHER DYKE

MUSGROVE ENGINEERING, P.A.
234 S. Whisperwood Way
Boise, Idaho 83709
208.384.0585
musgrovepa.com
OVER 40 YEARS OF EXCELLENCE

IDAHO TRANS. DEPT.
MATERIALS LAB MODIFICATION
206 N YELLOWSTONE HWY
RIGBY, IDAHO

| | |
|---|---|
| PROJECT | 20-230 |
| DRAWN | CD |
| CHECKED | TN |
| DATE | 20-11-06 |
| SCALE | SEE PLANS |
| SHEET | M1.0 |

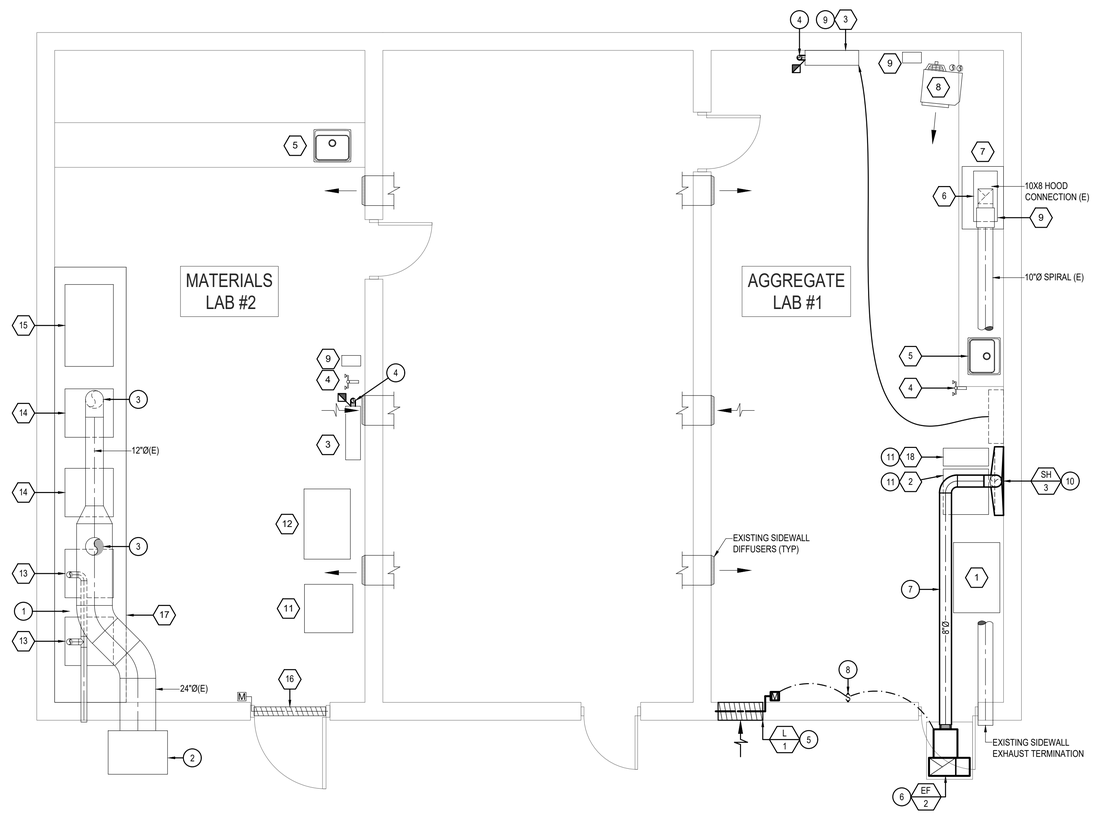


## REMOTE MATERIALS LAB MECHANICAL PLAN

1/4" = 1'-0"

NORTH

## KEYED NOTES:

(#) SYMBOL USED FOR NOTE CALLOUT.

1. EXISTING NCAT FLUE VENT OUT TO SIDEWALL.
2. EXISTING UTILITY EXHAUST FAN.
3. EXISTING 12"Ø EXHAUST CONNECTION TO HOOD.
4. NEW 3" SCHEDULE 80 STEEL VENT FROM ACID WASTE CABINET. VENT TO ROOF AND PROVIDE TURNED DOWN NECK WITH STAINLESS STEEL INSECT SCREEN. SEAL AROUND ROOF PENETRATION.
5. REMOVE EXISTING FLUE VENT THROUGH WALL. PROVIDE NEW 36"X28" MOTORIZED LOUVER IN ITS PLACE. COORDINATE INSTALLATION WITH EXISTING WINDOW, CONDUIT, AND WALL APPLIANCES. INTERLOCK WITH WALL SWITCH.
6. NEW UTILITY EXHAUST FAN MOUNTED APPROXIMATELY 10' ABOVE GRADE. MOUNT ON CUSTOM BUILT METAL PLATFORM. CONTRACTOR TO HIRE STRUCTURAL ENGINEER TO PROVIDE CALCULATIONS FOR PLATFORM REQUIREMENTS. CONTRACTOR SHALL PROVIDE THE OWNER/ENGINEER WITH CALCULATIONS AND DRAWINGS FOR THE PLATFORM PRIOR TO CONSTRUCTION. SEE MECHANICAL SCHEDULE FOR WEIGHT REQUIREMENTS.
7. ROUTE DUCTWORK TIGHT TO CEILING. SEE DETAILS #2 & #3 ON SHEET M3.0 FOR ADDITIONAL REQUIREMENTS.
8. WALL SWITCH TO CONTROL NEW UTILITY EXHAUST FAN (EF-2) AND LOUVER (L-1). COORDINATE LOCATION WITH EXISTING WALL SWITCH AND ELECTRICAL OUTLET.
9. RELOCATED CHEMICAL ACID CABINET. ANCHOR TO WALL AS REQUIRED. MOUNT 80" AFF. COORDINATE WITH OWNER PRIOR TO INSTALL.
10. NEW 46" SLOT HOOD TO CAPTURE SOURCE DUST/FUMES. CONTRACTOR SHALL FIELD VERIFY EXISTING CONDITIONS PRIOR TO BID.
11. MAINTAIN A MINIMUM DISTANCE OF 6" FROM SLOT HOOD.

## EXISTING MATERIALS LAB EQUIPMENT LIST:

1. COUNTERTOP OVEN
2. SHAKER MACHINE
3. CHEMICAL ACID CABINET - WALL MOUNTED
4. HAND EMERGENCY EYE WASH
5. LAB SINK - NO SEDIMENT TRAP INSTALLED
6. 42" X 24" HOOD
7. ASPHALT MIXER WITH PROPANE BURNER
8. GAS FIRED UNIT HEATER
9. AIR HOSE REEL
10. INLINE EXHAUST FAN WITH SEPARATE WALL SWITCH.
11. PLINE MACHINE
12. OVEN - DESPATCH
13. NCAT MACHINE
14. OVEN
15. HOT PLATE
16. MAKE-UP AIR MOTORIZED LOUVER (48" X 24")
17. EXHAUST HOOD 48" WIDE
18. SPLITTER

| NO. | REVISIONS | DATE |
|---|---|---|
| | | |

PROFESSIONAL ENGINEER
LICENSED
Christopher Dyke
16683
11/6/2020
STATE OF IDAHO
CHRISTOPHER DYKE

MUSGROVE
ENGINEERING, P.A.
234 S. Whisperwood Way
Boise, Idaho 83709
208.384.0585
musgrovepa.com
OVER 40 YEARS OF EXCELLENCE

IDAHO TRANS. DEPT.
MATERIALS LAB MODIFICATION
206 N YELLOWSTONE HWY
RIGBY, IDAHO

| | |
|---|---|
| PROJECT | 20-230 |
| DRAWN | CD |
| CHECKED | TN |
| DATE | 20-11-06 |
| SCALE | SEE PLANS |
| SHEET | M1.1 |

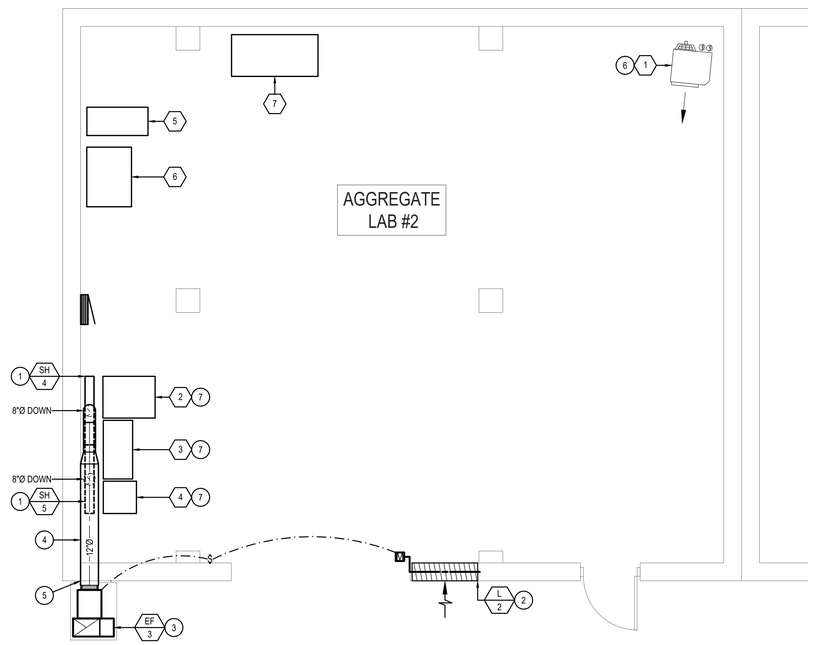


## AGGREGATE MATERIALS LAB MECHANICAL PLAN

1/4" = 1'-0"

NORTH

## KEYED NOTES:

(#) SYMBOL USED FOR NOTE CALLOUT.

1. NEW 46" SLOT HOOD TO CAPTURE SOURCE DUST/FUMES. CONTRACTOR SHALL FIELD VERIFY EXISTING CONDITIONS PRIOR TO BID.
2. NEW 44"X36" MOTORIZED LOUVER. COORDINATE INSTALLATION WITH EXISTING CONDUIT AND WALL APPLIANCES. INTERLOCK WITH WALL SWITCH.
3. NEW UTILITY EXHAUST FAN MOUNTED APPROXIMATELY 10' ABOVE GRADE. MOUNT ON CUSTOM BUILT METAL PLATFORM. CONTRACTOR TO HIRE STRUCTURAL ENGINEER TO PROVIDE CALCULATIONS FOR PLATFORM REQUIREMENTS. CONTRACTOR SHALL PROVIDE THE OWNER/ENGINEER WITH CALCULATIONS AND DRAWINGS FOR THE PLATFORM PRIOR TO CONSTRUCTION. SEE MECHANICAL SCHEDULE FOR WEIGHT REQUIREMENTS.
4. ROUTE DUCTWORK TIGHT TO CEILING. SEE DETAILS #2 & #3 ON SHEET M3.0 FOR STRUCTURAL SUPPORT REQUIREMENTS.
5. SEAL WALL PENETRATION.
6. EXISTING UNIT HEATER TO REMAIN.
7. MAINTAIN A MINIMUM DISTANCE OF 6" FROM SLOT HOOD.

## AGGREGATE LAB #2 EQUIPMENT LIST:

1. NATURAL GAS UNIT HEATER
2. GILSON SHAKER MACHINE
3. SCREEN DECK
4. JAW CRUSHER
5. MARYANN SHAKER MACHINE
6. GILSON LA ABSORPTION MACHINE
7. OVEN

| NO. | REVISIONS | DATE |
|---|---|---|
| | | |

PROFESSIONAL ENGINEER
LICENSED
16683
11/6/2020
STATE OF IDAHO
CHRISTOPHER DYKE

MUSGROVE
ENGINEERING, P.A.
234 S. Whisperwood Way
Boise, Idaho 83709
208.384.0585
musgrovepa.com
OVER 40 YEARS OF EXCELLENCE

IDAHO TRANS. DEPT.
MATERIALS LAB MODIFICATION
206 N YELLOWSTONE HWY
RIGBY, IDAHO

| | |
|---|---|
| PROJECT | 20-230 |
| DRAWN | CD |
| CHECKED | TN |
| DATE | 20-11-06 |
| SCALE | SEE PLANS |
| SHEET | M1.2 |

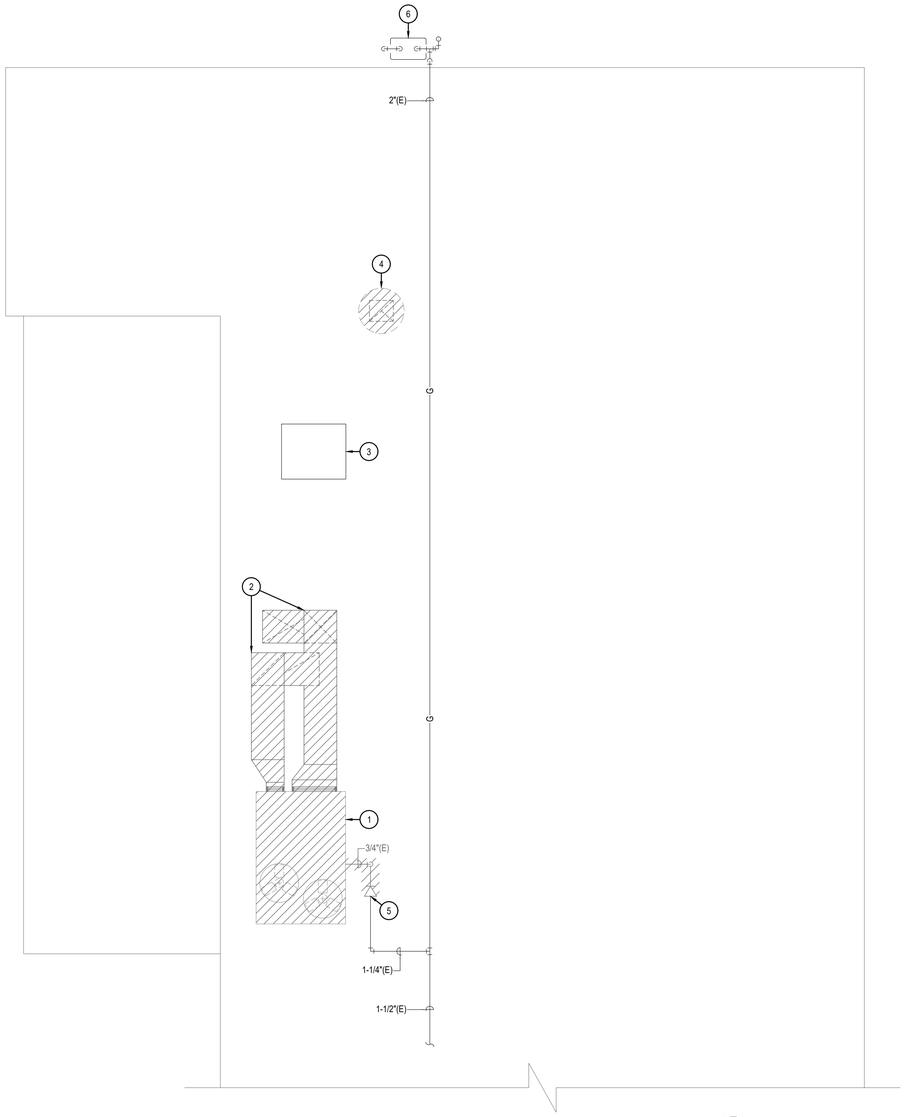


MATERIALS LAB #1 MECHANICAL DEMOLITION ROOF PLAN

1/4" = 1'-0"

NORTH

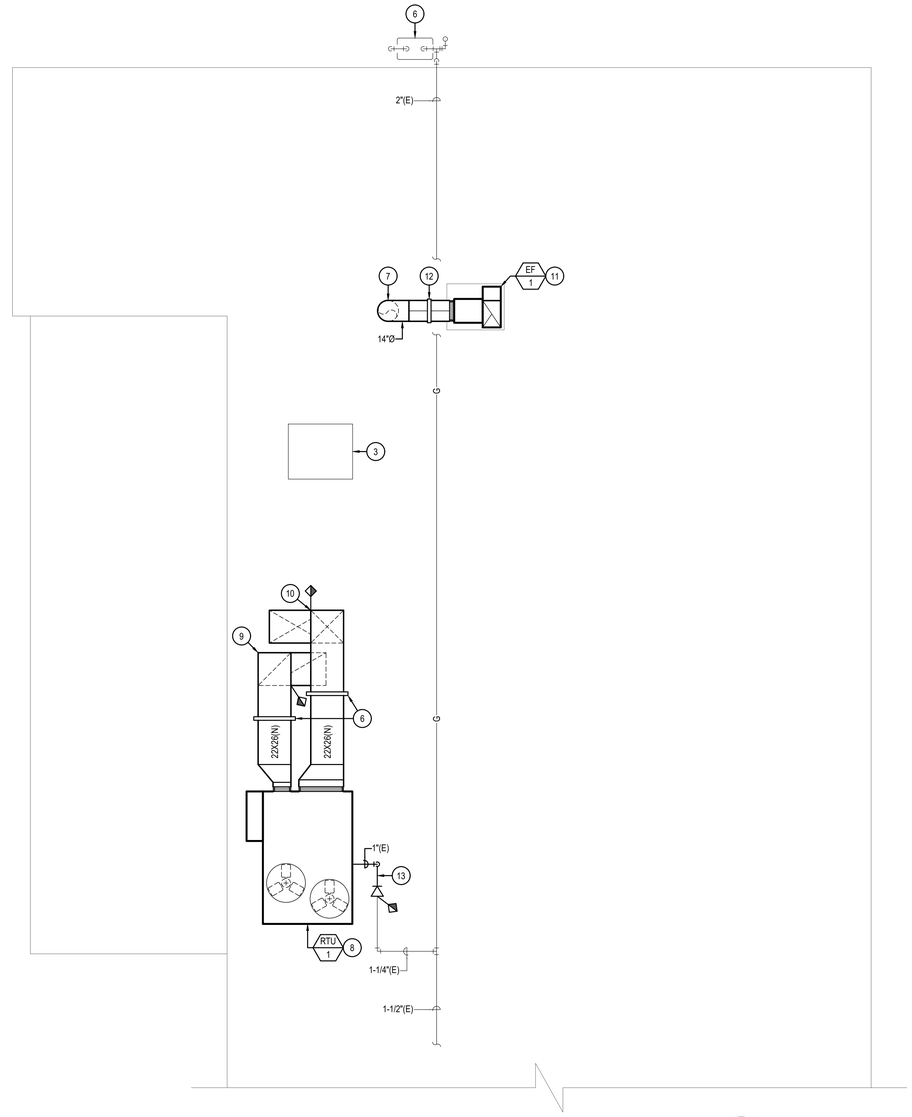


MATERIALS LAB #1 MECHANICAL NEW WORK ROOF PLAN

1/4" = 1'-0"

NORTH

## KEYED NOTES:

(#) SYMBOL USED FOR NOTE CALLOUT.

1. REMOVE EXISTING PACKAGED ROOFTOP UNIT, CONTROLS, ASSOCIATED DUCTWORK, AND ROOF MOUNTS. DISCONNECT EXISTING CONDENSATE DRAIN. SEE SHEET M1.0 FOR CONTINUATION OF DUCTWORK.
2. REMOVE EXISTING ROOF MOUNTED EXHAUST DUCTWORK BACK TO ROOF PENETRATION.
3. REMOVE EXISTING EXHAUST FAN AND CURB. COVER ROOF PENETRATION UNTIL NEW WORK IS COMPLETED. SEE SHEET M1.0 FOR CONTINUATION.
4. EXISTING ROOFTOP EQUIPMENT TO REMAIN.
5. DISCONNECT EXISTING 3/4" LOW PRESSURE GAS LINE. REMOVE BACK TO 1-1/4" GAS LINE CONNECTION.
6. EXISTING LOW PRESSURE GAS METER. CONTRACTOR TO VERIFY WITH INTERMOUNTAIN GAS COMPANY THAT THE EXISTING METER AND REGULATOR CAN HANDLE ADDITIONAL GAS LOAD.
7. ROUTE 14"Ø EXHAUST DUCT TO FLOOR BELOW. SEE SHEET M1.0 FOR CONTINUATION. SEAL NEW ROOF PENETRATION AND MAINTAIN EXISTING ROOF WARRANTY.
8. NEW PACKAGED ROOFTOP UNIT WITH ROOF CURB. SEE DETAIL #1 ON SHEET M3.1 FOR REQUIREMENTS. RECONNECT TO EXISTING CONDENSATE DRAIN. CONTRACTOR TO HIRE STRUCTURAL ENGINEER TO PROVIDE INSPECTION OF THE EXISTING ROOF STRUCTURE TO ENSURE NEW ROOFTOP UNIT CAN BE ACCOMMODATED. CONTRACTOR SHALL PROVIDE OWNER/ENGINEER WITH ANY CALCULATIONS AND DRAWINGS PRIOR TO INSTALLATION. MAINTAIN 10' FROM ROOF EDGE AND ANY EXHAUST AIR DAMPERS.
9. TRANSITION NEW 22"X26" RETURN DUCT TO EXISTING 22"X38" DUCTWORK.
10. TRANSITION NEW 22"X26" SUPPLY DUCT TO EXISTING 22"X38" DUCTWORK.
11. NEW ROOF MOUNTED UTILITY EXHAUST FAN ON ROOF CURB. CONNECT AND TRANSITION TO 14"Ø EXHAUST DUCT. PROVIDE FLEXIBLE DUCT CONNECTION AT EXHAUST FAN. CONTRACTOR TO HIRE STRUCTURAL ENGINEER TO PROVIDE INSPECTION OF THE EXISTING ROOF STRUCTURE TO ENSURE NEW EXHAUST FAN CAN BE ACCOMMODATED. CONTRACTOR SHALL PROVIDE OWNER/ENGINEER WITH ANY CALCULATIONS AND DRAWINGS PRIOR TO INSTALLATION. MAINTAIN 10' FROM ROOF EDGE AND ANY INTAKE AIR DAMPERS. SEE DETAIL #4 & #5 ON SHEET M3.1 FOR REQUIREMENTS.
12. PROVIDE NEW ROOF SUPPORT FOR ROOF MOUNTED DUCTWORK. SEE DETAIL #3 ON SHEET M3.1. ROUTE DUCTWORK OVER EXISTING LOW PRESSURE GAS LINE.
13. CONNECT AND TRANSITION NEW 1" LOW PRESSURE GAS LINE TO EXISTING 1-1/4" LOW PRESSURE GAS LINE. ROUTE TO NEW PACKAGED ROOFTOP UNIT (RTU-1). SEE DETAIL #6 ON SHEET M3.1 FOR REQUIREMENTS.

| NO. | REVISIONS | DATE |
|---|---|---|
| | | |

PROFESSIONAL ENGINEER
LICENSED
16683
11/6/2020
STATE OF IDAHO
CHRISTOPHER DYKE


MUSGROVE
ENGINEERING, P.A.
234 S. Whisperwood Way
Boise, Idaho 83709
208.384.0585
musgrovepa.com
OVER 40 YEARS OF EXCELLENCE


IDAHO TRANS. DEPT.
MATERIALS LAB MODIFICATION
206 N YELLOWSTONE HWY
RIGBY, IDAHO

| | |
|---|---|
| PROJECT | 20-230 |
| DRAWN | CD |
| CHECKED | TN |
| DATE | 20-11-06 |
| SCALE | SEE PLANS |
| SHEET | M2.0 |

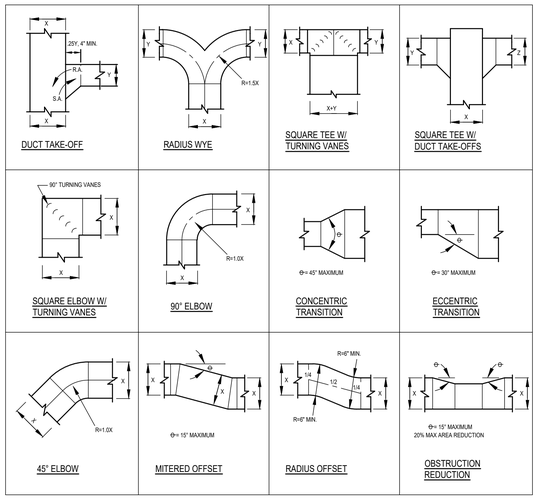


NOTE:
ALL DUCTWORK TRANSITIONS SHALL BE CONSTRUCTED AND INSTALLED TO SMACNA, SPECIFICATIONS AND THE ABOVE NOTED STANDARDS. ANY DEVIATIONS SHALL BE COORDINATED WITH THE ENGINEER.

## 1 RECTANGULAR DUCT FITTING DETAILS

NOT TO SCALE

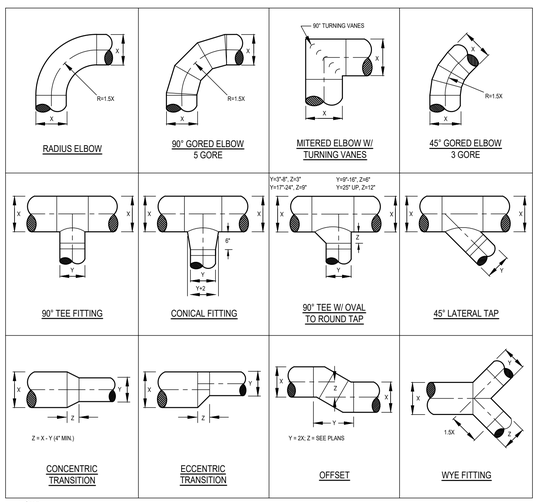


NOTE:
ALL DUCTWORK TRANSITIONS SHALL BE CONSTRUCTED AND INSTALLED TO SMACNA, SPECIFICATIONS, AND THE ABOVE NOTED STANDARDS. ANY DEVIATIONS SHALL BE COORDINATED WITH THE ENGINEER.

## 2 ROUND DUCT FITTING DETAILS

NOT TO SCALE

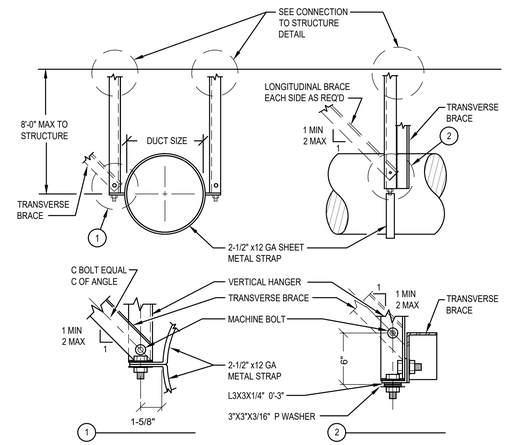


| MAX. DUCT SIZE [10] (in.) | VERTICAL HANGER ANGLE | DIAGONAL BRACE ANGLE [3,4,11] | BOLT SIZE (in.) | CONNECTION TYPE [9] | MAX. WEIGHT PER FT. (lb) [8] |
|---|---|---|---|---|---|
| 48 | 2x2x16ga | 2x2x16ga | 3/8 | B | 21 |
| 60 | 3x3x16ga | 4x4x14ga | 3/8 | D | 34 |
| 84 | 3x3x16ga | 4x4x14ga | 1/2 | F | 69 |

NOTES:
1. BRACE ALL DUCTS 28" IN DIAMETER AND LARGER. BRACE FLAT OVAL DUCTS IN THE SAME MANNER AS RECTANGULAR DUCTS.
2. NO BRACING IS REQUIRED IF THE DUCT IS SUSPENDED BY HANGERS 12 IN. OR LESS IN LENGTH, AS MEASURED FROM THE TOP OF THE DUCT TO THE BOTTOM OF SUPPORT WHERE THE HANGER IS ATTACHED. HANGERS MUST BE POSITIVELY ATTACHED TO THE DUCT WITHIN 2 INCHES OF THE TOP OF THE DUCT WITH A MINIMUM OF TWO #10 SHEET METAL SCREWS.
3. PROVIDE TRANSVERSE BRACING AT A 30 FOOT INTERVAL OR AT BOTH ENDS IF THE DUCT RUN IS LESS THAN THE SPECIFIED INTERVAL. TRANSVERSE BRACING WILL BE INSTALLED AT EACH DUCT TURN AND AT EACH END OF A DUCT RUN, WITH A MINIMUM OF ONE BRACE AT EACH END.
4. PROVIDE LONGITUDINAL BRACING AT A 60 FOOT INTERVAL WITH AT LEAST ONE BRACE PER DUCT RUN. TRANSVERSE BRACING FOR ONE DUCT SECTION MAY ALSO ACT AS LONGITUDINAL BRACING FOR A DUCT SECTION AT 90° TURNS IF THE BRACING IS INSTALLED WITHIN TWO TIMES THE DUCT WIDTH OF THE INTERSECTION OF BOTH DUCTS AND THE BRACING IS SIZED FOR THE LARGER DUCT. DUCT JOINTS WILL CONFORM TO SMACNA DUCT CONSTRUCTION STANDARDS.
5. WALLS (INCLUDING GYPSUM BOARD NON-LOAD BEARING PARTITIONS) THAT HAVE DUCTS 5. RUNNING THROUGH THEM MAY REPLACE A TYPICAL TRANSVERSE BRACE. PROVIDE SOLID BLOCKING AROUND DUCT PENETRATIONS AT ALL STUD WALL CONSTRUCTION.
6. UNBRACED DUCTS WILL BE INSTALLED WITH A 6 INCH MINIMUM CLEARANCE TO VERTICAL CEILING HANGER WIRES.
7. WHEN A COMBINATION OF DUCTS IS USED IN LIEU OF ONE DUCT, AT LEAST 2 SIDES OF EACH DUCT MUST BE CONNECTED TO VERTICAL OR HORIZONTAL ANGLES AND THE COMBINED WEIGHT SHALL NOT EXCEED THAT GIVEN IN THE TABLE. (ADD HORIZONTAL ANGLES IF REQUIRED).
8. MAXIMUM WEIGHT OF DUCT OR COMBINATIONS OF DUCTS IS PER LINEAR FOOT. FOR DUCTS WEIGHING MORE THAN THE MAXIMUM WEIGHT PER FOOT, USE THE NEXT HIGHER DUCT SIZE.
9. SEE CONNECTION TO STRUCTURE DETAIL.
10. FOR DUCTS SMALLER THAN OR EQUAL TO 36", SEE SINGLE HANGER DETAIL.
11. PRE-STRETCHED AIRCRAFT CABLE MAY BE USED IN LIEU OF ANGLE BRACE. CABLE SHALL BE SIZED AND INSTALLED PER SMACNA. BRACING TYPES SHALL NOT BE MIXED.

## 3 SEISMIC BRACING FOR RECTANGULAR DUCTS

NOT TO SCALE

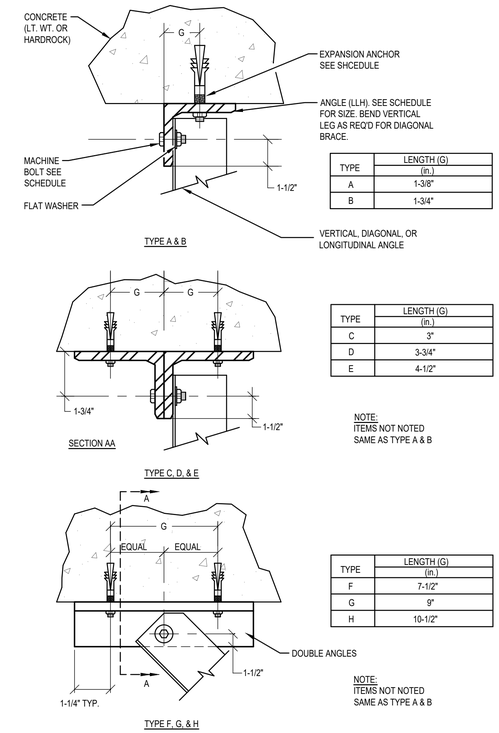


| TYPE | LENGTH (G) (in.) |
|---|---|
| A | 1-3/8" |
| B | 1-3/4" |

| TYPE | LENGTH (G) (in.) |
|---|---|
| C | 3" |
| D | 3-3/4" |
| E | 4-1/2" |

NOTE:
ITEMS NOT NOTED SAME AS TYPE A & B

| TYPE | LENGTH (G) (in.) |
|---|---|
| F | 7-1/2" |
| G | 9" |
| H | 10-1/2" |

NOTE:
ITEMS NOT NOTED SAME AS TYPE A & B

| TYPE | MAX. LOAD CAPACITY [1] (lb) | EXPANSION ANCHORS TO CONCRETE [2,3] (in) | MACHINE BOLT END OF BRACE (in) | SPREADER SIZE | ANGLE TO SUPPORTING STRUCTURAL MEMBER [4] |
|---|---|---|---|---|---|
| A | 1040 | 1/2 | 3/8 | C4x5.4 | 3-1/2x2-1/2x3/8x0 ft, 3 in LLH |
| B | 1415 | 5/8 | 3/8 | C4x5.4 | 5x3x3/8x0 ft, 3 in LLH |
| C | 1586 | 2-1/2 | 1/2 | C5x6.7 | 2, 4x3x3/8x0 ft, 4 in LLH |
| D | 2020 | 2-5/8 | 1/2 | C6x8.5 | 2, 5x3x3/8x0 ft, 4 in LLH |
| E | 2870 | 2-3/4 | 5/8 | C8x11.5 | 2, 6x3-1/2x3/8x0 ft, 4 in LLH |
| F | 4600 | 4-5/8 | 3/4 | C9x13.4 | 2, 5x3x3/8x0 ft, 10 in LLH |
| G | 7040 | 4-3/4 | 7/8 | C10x15.3 | 2, 6x3-1/2x1/2x0 ft, 11-1/2 in LLH |
| H | 9240 | 4-7/8 | 1 | C12x20.7 | 2, 8x4x3/4x1 ft, 1-1/2 in LLH |

NOTES:
1. MAXIMUM LOAD CAPACITY IS FOR GENERAL INFORMATION ONLY.
2. FOR SLABS LESS THAN 5" THICK, THIN SLAB INSERTS MAY BE USED.
3. EXPANSION ANCHORS WILL BE INSTALLED PER THE REQUIREMENTS GIVEN IN THE LATEST GOVERNING AUTHORITY RESEARCH REPORT FOR THE SPECIFIC ANCHOR.
4. LLH = LONG LEG HORIZONTAL.

## 4 SEISMIC CONNECTIONS TO CONCRETE

NOT TO SCALE

| NO. | REVISIONS | DATE |
|---|---|---|
| | | |

PROFESSIONAL ENGINEER LICENSED Christopher L. Dyke 16683 11/6/2020 STATE OF IDAHO CHRISTOPHER DYKE


MUSGROVE ENGINEERING, P.A.
234 S. Whisperwood Way
Boise, Idaho 83709
208.384.0585
musgrovepa.com
OVER 40 YEARS OF EXCELLENCE


IDAHO TRANS. DEPT.
MATERIALS LAB MODIFICATION
206 N YELLOWSTONE HWY
RIGBY, IDAHO

| | |
|---|---|
| PROJECT | 20-230 |
| DRAWN | CD |
| CHECKED | TN |
| DATE | 20-11-06 |
| SCALE | SEE PLANS |
| SHEET | M3.0 |

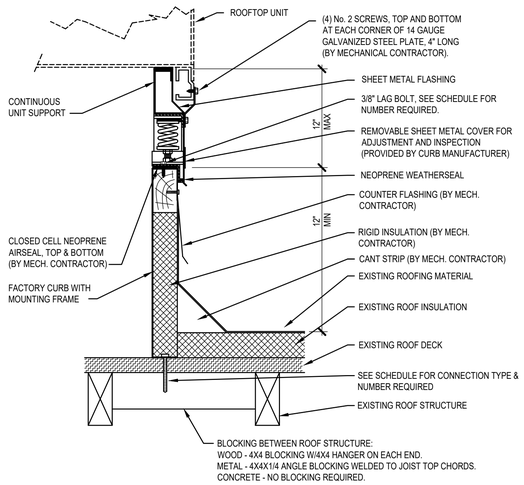


## CURB TO ROOF CONNECTION SCHEDULE

| NOMINAL ROOFTOP UNIT CAPACITY | MAX. WEIGHTS | TOTAL LATERAL FORCE (Fp) | NUMBER & TYPE OF CONNECTION (EQUALLY SPACED) | | |
|---|---|---|---|---|---|
| | | | ROOF STRUCTURE TYPE | | |
| | | | METAL | WOOD | CONCRETE |
| 7-8 TONS | 1050 LBS | 1135 LBS | (6) 1/2" LAG BOLT | (6) 1/2" LAG BOLT | (6) 3/8" EXPANSION BOLT |
| 10-12 TONS | 1300 LBS | 1405 LBS | (8) 1/2" LAG BOLT | (8) 1/2" LAG BOLT | (8) 3/8" EXPANSION BOLT |

COMPLIES WITH THE INTERNATIONAL BUILDING CODE

MANUFACTURER SHALL PROVIDE CALCULATIONS FOR THE CURB MOUNTED SPRING RAIL SHOWING COMPLIANCE WITH THE INTERNATIONAL BUILDING CODE (LATEST ADOPTED EDITION).

## 1 ROOFTOP UNIT CURB MOUNTED SPRING RAIL DETAIL

NOT TO SCALE

NOTES:

1. FOR TAKE-OFFS LARGER THAN 12" DIAMETER, USE A FACTORY MANUFACTURED DAMPER. LOUVERS & DAMPERS, INC. MODEL CD-600 WITH A LOCKING HAND QUADRANT OR EQUAL.
2. ROD CONTINUOUS ON 2" W.G. CLASS AND ON ALL DAMPERS OVER 12" DIAMETER.
3. BLADE 22 GAGE MIN., BUT NOT LESS THAN TWO GAGES MORE THAN THE DUCT GAGE.
4. PROVIDE REMOTE CEILING OPERATOR WHERE DAMPER IS INACCESSIBLE.
5. FOR DUCTS OVER 12" HIGH USE MULTIPLE BLADE DAMPERS (SEE FIG. C).
6. ALTERNATE MANUFACTURERS INCLUDE: AMERICAN WARMING, SAFE-AIR/DOWCO, J&J, LOUVERS & DAMPERS, RUSKIN, NAILOR, ARROW UNITED, POTTORFF, & CESCO.
7. PROVIDE STAND-OFF FOR DAMPER ARMS LOCATED W/EXTERNAL INSULATION.

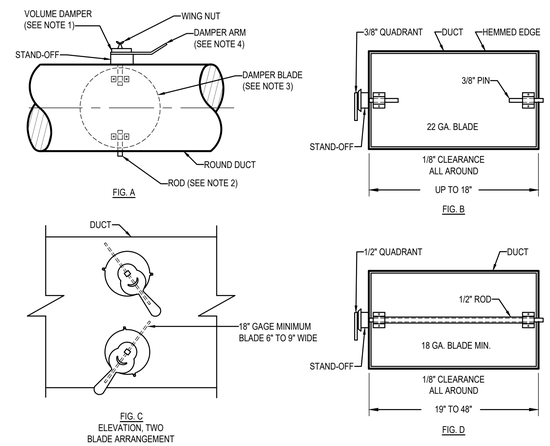


## 2 BALANCE DAMPER DETAIL

NOT TO SCALE

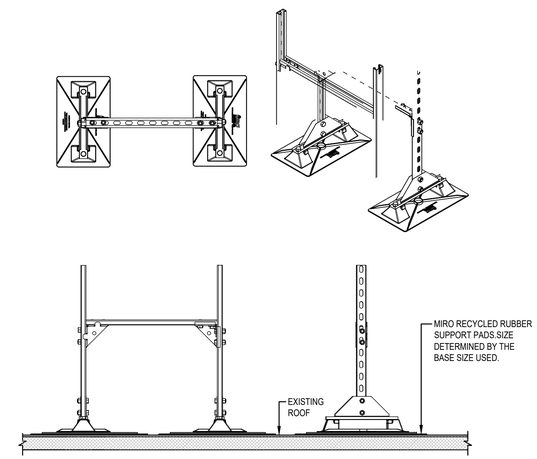


NOTES

1. PROVIDE WITH MIRO INDUSTRIES MODEL 6-DS, GALVANIZED STEEL, HEAVY DUTY MECHANICAL ROOF SUPPORT WITH ADJUSTABLE SUPPORT LEGS
2. DUCTS SHALL BE SECURED TO THE SUPPORT.
3. APPROVED ALTERNATE MANUFACTURERS: UNISTRUT AND ROOF-PRO

## 3 ROOFTOP DUCT SUPPORT DETAIL

NOT TO SCALE

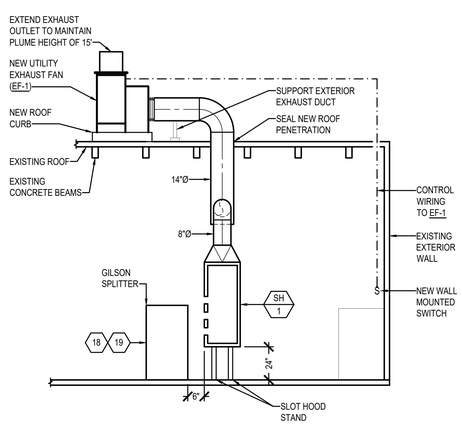


## 4 SLOT HOOD & EXHAUST FAN DETAIL

(SH-1 & EF-1)

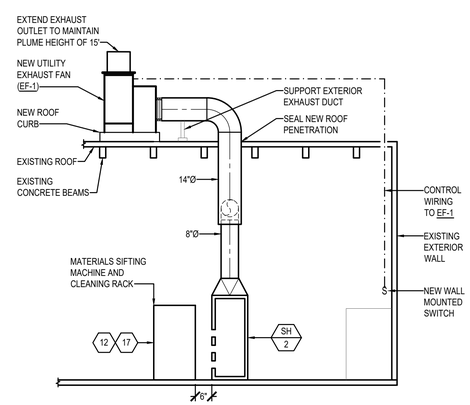


## 5 SLOT HOOD & EXHAUST FAN DETAIL

(SH-2 & EF-1)

EQUIPMENT CONNECTION NOTES:

1. INSTALL FLEX CONNECTION AT ALL ROOF TOP UNITS WHICH HAVE SPRING ISOLATION CURBS (36" MAXIMUM)
2. INSTALL SOLID PIPE CONNECTION TO ALL ROOF TOP UNITS WHICH DO NOT HAVE SPRING ISOLATION CURBS
3. PAINT PIPE WITH RUST RESISTANT PRIMER, RED OR GRAY. SHERWIN WILLIAMS PRO INDUSTRIAL DTM OR APPROVED EQUAL.

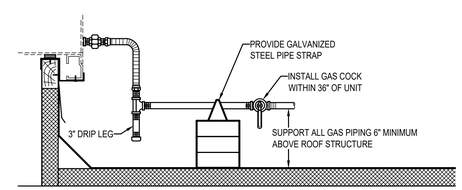


APPROVED PIPE SUPPORT SYSTEMS:

- MIRO MODEL 1.5 WITH SPACERS
- ADVANCED SUPPORT PRODUCTS
- VERSABLOCK BY FREEDOM INC

| PIPE SUPPORT REQUIREMENTS | |
|---|---|
| SIZE OF PIPE | SUPPORT REQUIRED |
| 1/2" | 6' O.C. |
| 3/4" - 1" | 8' O.C. |
| 1-1/4" OR LARGER | 10' O.C. |

## 6 ROOFTOP UNIT - GAS PIPING DETAIL

NOT TO SCALE

| NO. | REVISIONS | DATE |
|---|---|---|
| | | |

PROFESSIONAL ENGINEER LICENSED 16683 11/6/2020 STATE OF IDAHO CHRISTOPHER DYKE


MUSGROVE ENGINEERING, P.A.
234 S. Whisperwood Way
Boise, Idaho 83709
208.384.0585
musgrovepa.com
OVER 40 YEARS OF EXCELLENCE


IDAHO TRANS. DEPT.
MATERIALS LAB MODIFICATION
206 N YELLOWSTONE HWY
RIGBY, IDAHO

| | |
|---|---|
| PROJECT | 20-230 |
| DRAWN | CD |
| CHECKED | TN |
| DATE | 20-11-06 |
| SCALE | SEE PLANS |
| SHEET | M3.1 |

# SLOT HOOD SCHEDULE

| SYMBOL | LOCATION | SERVES | EXHAUST MATERIAL | EXHAUST AIRFLOW (CFM) | EXHAUST OUTLET SIZE | MINIMUM DUCT VELOCITY (FPM) | PD (" WG) | HOOD DIMENSIONS | | | | SLOTS | | | | OPERATING WEIGHT (LBS) | MANUFACTURER AND MODEL | REMARKS |
|---|---|---|---|---|---|---|---|---|---|---|---|---|---|---|---|---|---|---|
| | | | | | | | | LENGTH | HEIGHT | DEPTH | MAXIMUM VELOCITY (FPM) | NO. | LENGTH | HEIGHT | MINIMUM VELOCITY (FPM) | | | |
| SH-1 | MATERIALS LAB #1 | LAB EQUIPMENT | HEAVY DUST | 1,750 | 8"Ø | 3,500 | 2.0 | 58" | 85" | 6" | 1/2 SLOT VELOCITY | 4 | 58" | 1/2" | 1830 | 175 | ACS FUME HOOD SFH-58 | 1 , 2 , 3 , 4 |
| SH-2 | MATERIALS LAB #1 | LAB EQUIPMENT | HEAVY DUST | 1,750 | 8"Ø | 3,500 | 2.0 | 58" | 85" | 6" | 1/2 SLOT VELOCITY | 4 | 58" | 1/2" | 1830 | 175 | ACS FUME HOOD SFH-58 | 1 , 2 , 3 , 4 |
| SH-3 | AGGREGATE LAB #1 | LAB EQUIPMENT | HEAVY DUST | 1,400 | 8"ø | 3,500 | 2.0 | 46" | 56" | 6" | 1/2 SLOT VELOCITY | 4 | 46" | 1/2" | 1830 | 150 | ACS FUME HOOD SFH-46 | 1 , 2 , 3 , 4 |
| SH-4 | AGGREGATE LAB #2 | LAB EQUIPMENT | HEAVY DUST | 1,400 | 8"ø | 3,500 | 2.0 | 46" | 56" | 6" | 1/2 SLOT VELOCITY | 4 | 46" | 1/2" | 1830 | 150 | ACS FUME HOOD SFH-46 | 1 , 2 , 3 , 4 |
| SH-5 | AGGREGATE LAB #2 | LAB EQUIPMENT | HEAVY DUST | 1,400 | 8"ø | 3,500 | 2.0 | 46" | 56" | 6" | 1/2 SLOT VELOCITY | 4 | 46" | 1/2" | 1830 | 150 | ACS FUME HOOD SFH-46 | 1 , 2 , 3 , 4 |

REMARKS:

1. ALTERNATE MANUFACTURERS: NEDERMAN, MONOXIVENT, KEES, VENTAIRE.
2. PROVIDE W/ MANUFACTURER'S HINGED AND ADJUSTABLE SIDE BAFFLES, BLAST GATE.
3. PROVIDE W/ 304 STAINLESS STEEL CONSTRUCTION.
4. RUN-OUT DUCT SHALL BE THE SAME SIZE AS THE SLOT HOOD EXHAUST OUTLET.

# EXHAUST FAN SCHEDULE

| SYMBOL | AREA SERVED | UNIT TYPE | BLOWER | | | | ELECTRICAL | | MAXIMUM SONES | OPERATING WEIGHT (LBS) | MANUFACTURER AND MODEL | REMARKS |
|---|---|---|---|---|---|---|---|---|---|---|---|---|
| | | | CFM | ESP | MAXIMUM RPM | DRIVE | HP/W | V/Ø | | | | |
| EF-1 | MATERIALS LAB #1 | ROOF MOUNTED | 3,500 | 2.0 | 1,725 | BELT | 2.0 HP | 208/3 | 75.0 | 215 | COOK MODEL 165 CPA | 1 , 2 , 4 |
| EF-2 | AGGREGATE LAB #1 | UTILITY EXHAUST FAN | 1,400 | 2.0 | 1,725 | BELT | 0.75 HP | 240/3 | 70.0 | 135 | COOK MODEL 120 CPA | 1 , 3 , 4 |
| EF-3 | AGGREGATE LAB #2 | UTILITY EXHAUST FAN | 2,800 | 2.0 | 1,725 | BELT | 2.0 HP | 240/3 | 77.0 | 185 | COOK MODEL 135 CPA | 1 , 3 , 4 |

REMARKS:

1. APPROVED ALTERNATE MANUFACTURERS: GREENHECK, PENNBARRY, TWIN CITY FAN COMPANY, SOLER & PALAU, ACME, AND BARRY BLOWER.
2. PROVIDE UNIT WITH MOTORIZED BACKDRAFT DAMPER, ALUMINUM INLET AND OUTLET COMP FLANGE, NEMA 3 PRE-WIRED DISCONNECT, SIMPLIDRIVE PRE-PROGRAMMED VFD WITH PRE-WIRED FAN MOUNTED SPEED CONTROLLER, THERMAL OVERLOAD PROTECTION, ALUMINUM DRAIN, ALUMINUM DOOR HINGE, ALUMINUM BELT GUARD, RUBBER ISOLATORS, WEATHER COVER, ISOLATION RAILS, AND ROOF CURB.
3. PROVIDE UNIT WITH MOTORIZED BACKDRAFT DAMPER, ALUMINUM INLET AND OUTLET COMP FLANGE, NEMA 3 PRE-WIRED DISCONNECT, SIMPLIDRIVE PRE-PROGRAMMED VFD WITH PRE-WIRED FAN MOUNTED SPEED CONTROLLER, THERMAL OVERLOAD PROTECTION, ALUMINUM DRAIN, ALUMINUM DOOR HINGE, ALUMINUM BELT GUARD, RUBBER ISOLATORS, WEATHER COVER, ISOLATION RAILS, AND CUSTOM METAL WALL BRACKET. PROVIDE NECESSARY ACCESSORIES FOR HORIZONTAL INLET WITH TRANSITION TO ROUND DUCTWORK, AND VERTICAL OUTLET.
4. CONTROL FAN WITH SEPARATE WALL SWITCH. PROVIDE WITH PILOT LIGHT. SEE CONTROL DRAWING FOR SEQUENCE OF OPERATION.

# MATERIALS LAB #1 VENTILATION

| REQUIRED OSA | | |
|---|---|---|
| RTU-1 (N) | 3750 | CFM |
| | | |
| TOTAL | 3750 | CFM |
| **BUILDING EXHAUST** | | |
| EF-1 (N) | 3500 | CFM |
| EXISTING WALL EXHAUST FAN | 150 | CFM |
| | | |
| TOTAL | 3650 | CFM |
| TOTAL ROOM PRESSURIZATION | 100 | CFM |

AGGREGATE LAB #1

GENERAL
EXHAUST SYSTEM SHALL INCLUDE A SLOT HOOD, A WALL MOUNTED UTILITY EXHAUST FAN, A WALL SWITCH, AND A MOTORIZED LOUVER.

OPERATION
THE NEW THE WALL SWITCH SHALL BE INTERLOCKED WITH THE NEW UTILITY EXHAUST FAN AND MOTORIZED WALL LOUVER. IF THE WALL SWITCH IS TURNED ON THE MOTORIZED WALL LOUVER (L-1) SHALL OPEN AND THE EXHAUST FAN (EF-2) SHALL ENGAGE.

## UTILITY EXHAUST FAN CONTROL SCHEMATIC

(EF-2, L-1, & SH-3)

AGGREGATE LAB #2

GENERAL
EXHAUST SYSTEM SHALL INCLUDE TWO SLOT HOODS, A WALL MOUNTED UTILITY EXHAUST FAN, A WALL SWITCH, AND A MOTORIZED LOUVER.

OPERATION
THE NEW THE WALL SWITCH SHALL BE INTERLOCKED WITH THE NEW UTILITY EXHAUST FAN AND MOTORIZED WALL LOUVER. IF THE WALL SWITCH IS TURNED ON THE MOTORIZED WALL LOUVER (L-2) SHALL OPEN AND THE EXHAUST FAN (EF-3) SHALL ENGAGE.

## UTILITY EXHAUST FAN CONTROL SCHEMATIC

(EF-3, L-2, SH-4, & SH-5)

GENERAL
THE EMERGENCY SHOWER HOT WATER RECIRCULATION PUMP (RP-1) SHALL OPERATE OFF OF A TIMECLOCK.

OPERATION
THE RECIRCULATION PUMP SHALL OPERATE FOR 15-MIN (ADJUSTABLE) EVERY SEVEN DAYS (ADJUSTABLE) THIS WILL HELP ENSURE WATER IS FLUSHED CONSISTENTLY.

## HOT WATER PUMP SEQUENCE OF OPERATION

(RP-1)

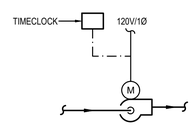


## HOT WATER PUMP CONTROL SCHEMATIC

(RP-1)

# PACKAGED AIR CONDITIONING SCHEDULE

| SYMBOL | AREA SERVED | NOM. TONS | SUPPLY FAN | | | | COOLING CAPACITY 95°OSA, 80°EDB, 62°EWB | | GAS HEATING CAPACITY | | RTU ELECTRICAL | | | OSA CFM | MIN. EER | OPER. WEIGHT (LBS) | MANUFACTURER AND MODEL | REMARKS |
|---|---|---|---|---|---|---|---|---|---|---|---|---|---|---|---|---|---|---|
| | | | CFM | ESP | BRAKE HP | DRIVE | TOTAL MBH | SENSIBLE MBH | INPUT MBH | OUTPUT MBH | MCA | MOCP | V/Ø | | | | | |
| RTU-1 | MATERIALS LAB #1 | 10.0 | 4,000 | 0.75 | 2.0 | DIRECT ECM | 115.0 | 115.0 | 256.0 | 205.0 | 57.0 | 70.0 | 208/3 | 800 | 11.5 | 1,400 | CARRIER/IAIRE UGC-H12MHH205 | 1 , 2 , 3 , 4 , 5 , 6 , 7 |

REMARKS:

1. APPROVED ALTERNATE MANUFACTURERS: GREENHECK, TRANE, AAON, LENNOX, AND YORK.
2. PROVIDE UNIT WITH SEVEN-DAY PROGRAMMABLE AUTO-CHANGEOVER WITH 5 DEGREE DEADBAND, ADAPTIVE INTELLIGENT AUTOMATIC START/ CONTROL, 3 STAGE HEAT, 2 STAGE COOLING THERMOSTAT HONEYWELL VISIONPRO MODEL TH8321R1001 WITH ECONOMIZER FAULT DETECTION. THERMOSTAT SHALL BE POWERED BY A 24VAC WIRE CONNECTION.
3. UNIT SHALL BE CAPABLE OF 100% OUTSIDE AIR OPERATION. SEE CONTROL SCHEMATIC FOR SEQUENCE OF OPERATION.
4. PROVIDE UNIT WITH MICROMETL WELDED SPRING ISOLATION CURB (SEE DETAIL FOR SEISMIC RESTRAINTS), FLUE EXTENDER, HAIL GUARDS, HIGH ALTITUDE KIT, HINGED ACCESS PANELS, FULLY MODULATING HOT GAS HEAT & REHEAT, MANUFACTURER GEAR DRIVEN INTEGRATED DRY BULB ECONOMIZER WITH BELIMO LOGIC ACTUATORS AND AUX END SWITCH, MANUFACTURER MODULATING POWER EXHAUST WITH VARIABLE SPEED MOTOR CONTROLLER (100% RELIEF), PRESSURE SENSOR SET TO .02 POSITIVE PRESSURE, AND A RETURN AIR DUCT SMOKE DETECTOR (PROVIDED BY MECHANICAL AND INSTALLED BY ELECTRICAL). UNIT INCLUDES A SINGLE POINT CONNECTION FOR THE ROOFTOP UNIT, ECONOMIZER, AND POWER EXHAUST.
5. PROVIDE 2" PLEATED MERV 8 FILTER AND FILTER RACK WITH 4 EXTRA SETS PER UNIT.
6. MAXIMUM "A-WEIGHTED" SUPPLY AIR SOUND RATINGS FOR UNITS 2-18 TONS = 95 DB @ 125 HZ, 90 DB @ 250 HZ, PER ARI STANDARDS 270 & 370.
7. PROVIDE A WATER LEVEL MONITOR IN THE PRIMARY DRAIN PAN INTERLOCKED WITH UNIT FOR UNIT SHUT-DOWN ON DETECTION OF WATER WHEN THE PRIMARY DRAIN IS PLUGGED.

# LOUVER SCHEDULE

| SYMBOL | SERVICE | TYPE | NOMINAL SIZE | MINIMUM FREE AREA (SQ.FT.) | FINISH | MANUFACTURER AND MODEL | REMARKS |
|---|---|---|---|---|---|---|---|
| L-1 | AGGREGATE LAB #1 INTAKE | FIXED DRAINABLE | 30X28 | 2.80 | AAMA 2604 | RUSKIN ELF375DX | 1 , 2 , 3 |
| L-2 | AGGREGATE LAB #2 INTAKE | FIXED DRAINABLE | 44X36 | 5.06 | AAMA 2604 | RUSKIN ELF375DX | 1 , 2 , 3 |

REMARKS:

1. APPROVED ALTERNATE MANUFACTURERS: GREENHECK, AMERICAN WARMING, AIROLITE, SAFE-AIR/DOWCO, LOUVERS & DAMPERS, ARROW UNITED, CESCO, NCA MANUFACTURING, NAILOR, POTTORFF, AND UNITED ENERTECH.
2. COLOR TO BE SELECTED BY ENGINEER.
3. PROVIDE WITH FLANGED FRAME, INSECT SCREEN, BIRD SCREEN, AND 120V/1Ø LOW LEAKAGE MOTORIZED DAMPER.

MATERIALS LAB #1

NEW EXHAUST FAN AND ROOFTOP UNIT SEQUENCE OF OPERATION

THE NEW UTILITY EXHAUST FAN (EF-1) SHALL OPERATE OFF OF A WALL SWITCH. THE NEW PACKAGED ROOFTOP (RTU-1) UNIT SHALL PROVIDE HEATING, COOLING, AND VENTILATION TO THE LAB SPACES. RTU-1 SHALL ALSO INCLUDE A SPACE PRESSURE SENSOR WHICH SHALL MODULATE OPEN THE OUTSIDE AIR DAMPER TO MAINTAIN AN INDOOR ROOM PRESSURE SETPOINT. DURING NORMAL OPERATION (EF-1 TURNED OFF) THE UNIT SHALL MAINTAIN A MINIMUM OUTSIDE AIR POSITION AND CYCLE THE HEATING AND COOLING SYSTEMS TO MAINTAIN A SETPOINT BASED ON A PREPROGRAMMED SCHEDULE. THE UNIT SHALL BE CAPABLE OF A FULL ECONOMIZER MODE WHICH INCLUDES MODULATING ECONOMIZER AND MODULATING POWER EXHAUST CONTROL.

THE OCCUPIED HEATING SETPOINT SHALL BE 70°F (ADJUSTABLE).
THE OCCUPIED COOLING SETPOINT SHALL BE 75°F (ADJUSTABLE).

THE UNOCCUPIED HEATING SETPOINT SHALL BE 55°F (ADJUSTABLE).
THE UNOCCUPIED COOLING SETPOINT SHALL BE 85°F (ADJUSTABLE).

THE INDOOR ROOM PRESSURE SETPOINT SHALL BE +0.02" WC (ADJUSTABLE).

## UTILITY EXHAUST FAN AND ROOFTOP UNIT SEQUENCE OF OPERATION

(EF-1 & RTU-1)

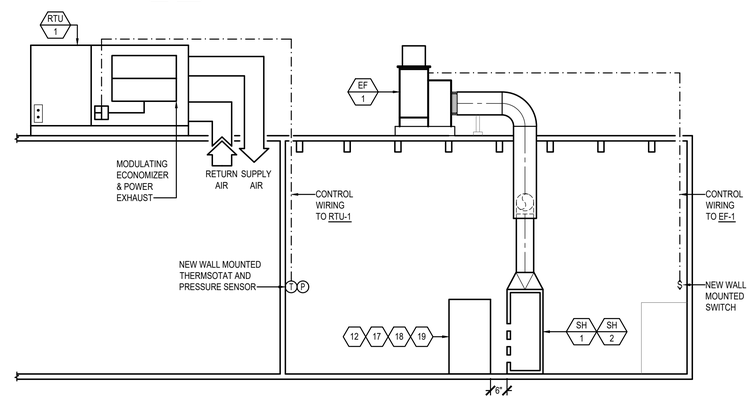


## UTILITY EXHAUST FAN AND ROOFTOP UNIT CONTROL SCHEMATIC

(EF-1 & RTU-1)

| NO. | REVISIONS | DATE |
|---|---|---|
| | | |

PROFESSIONAL ENGINEER LICENSED Christopher Dyke 16683 21/6/2020 STATE OF IDAHO CHRISTOPHER DYKE


MUSGROVE ENGINEERING, P.A.
234 S. Whisperwood Way
Boise, Idaho 83709
208.384.0585
musgrovepa.com
OVER 40 YEARS OF EXCELLENCE


IDAHO TRANS. DEPT.
MATERIALS LAB MODIFICATION
206 N YELLOWSTONE HWY
RIGBY, IDAHO

| | |
|---|---|
| PROJECT | 20-230 |
| DRAWN | CD |
| CHECKED | TN |
| DATE | 20-11-06 |
| SCALE | SEE PLANS |
| SHEET | M4.0 |

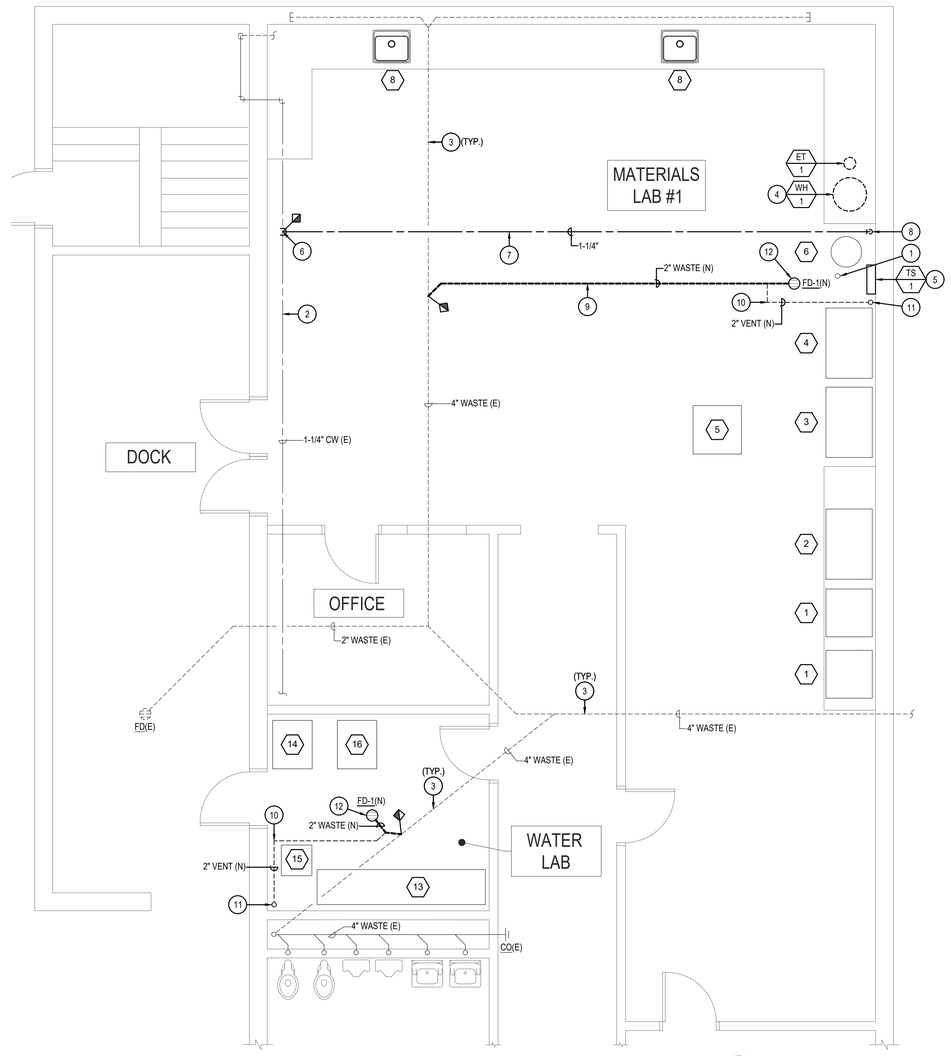


## MATERIALS LAB #1 PLUMBING FLOOR PLAN

1/4" = 1'-0"

NORTH

## KEYED NOTES:

(#) SYMBOL USED FOR NOTE CALLOUT.

1. EXISTING 3/4" WATER LINE SERVING EMERGENCY SHOWER FROM BELOW SLAB.
2. EXISTING 1-1/4" COLD WATER LINE LOCATED ON WALL OF MATERIALS LAB #1 NORTH WALL.
3. EXISTING 4" WASTE LOCATED IN CEILING OF BASEMENT. (TYPICAL)
4. NEW ELECTRIC WATER HEATER LOCATED IN CABINET.
5. NEW TEMPERED WATER MIXING STATION. SEE DETAIL #1 ON SHEET P2.0 FOR PIPING REQUIREMENTS.
6. NEW 1-1/4" CW TEE.
7. ROUTE 1-1/4" CW LINE TIGHT TO CEILING OF MATERIALS LAB #1 BETWEEN BEAMS.
8. ROUTE 1-1/4" CW LINE DOWN TIGHT TO WALL. SEE DETAIL #1 ON SHEET P2.0 FOR PIPING REQUIREMENTS.
9. ROUTE NEW 2" WASTE IN BASEMENT CEILING SPACE.
10. ROUTE NEW 2" VENT IN BASEMENT CEILING SPACE.
11. ROUTE 2" VENT UP FROM BASEMENT THROUGH CONCRETE FLOOR TO ROOF. CORE DRILL, REFILL, AND SEAL CONCRETE FLOOR. PENETRATE ROOF AND SEAL TO PROVIDE NEW VTR. PAINT TO MATCH WALL COLOR.
12. SAWCUT CONCRETE FLOOR AND INSTALL NEW FLOOR DRAIN. FILL AND SEAL FLOOR TO MATCH EXISTING. PROVIDE WITH TRAP PRIMER. CONNECT TO NEAREST WATER LINE BELOW SLAB.

## EXISTING MATERIALS LAB EQUIPMENT LIST:

1. NCAT ASPHALT CONTENT TESTER - HIGH TEMP OVEN - THERMOLYNE.
2. COUNTERTOP VWR OVEN (300-400°F).
3. FLOOR MOUNTED VWR OVEN (300-400°F).
4. FLOOR MOUNTED DESPATCH LBB/LEB SERIES OVEN (300-400°F).
5. PLINE INSTRUMENT COMPANY - GYRATORY COMPACTOR - MODEL AFG1A.
6. EMERGENCY SHOWER & EYE WASH STATION.
7. UNDERCOUNTER SULFER COOKER WITH SIDEWALL FAN. CONTROLLED BY SEPARATE SWITCH.
8. SINGLE BOWL DEEP LAB SINK. SEDIMENT TRAP BELOW SINK FOR DRAIN.
9. CHEMICAL ACID CABINET.
10. EXHAUST FAN FOR GENERAL EXHAUST. CONTROLLED WITH SEPARATE SWITCH ON WALL FOR CONTROL.
11. HOOD 72" X 32" HOOD WITH FAN AT ROOF. CONTROLLED WITH SEPARATE WALL SWITCH.
12. MATERIALS SIFTING MACHINE.
13. WATER TANK - TESTING OF SAMPLES.
14. WET SAW TO CUT CONCRETE SAMPLES.
15. CONCRETE GRINDER - WET TYPE.
16. MATERIAL CRUSHER.

| NO. | REVISIONS | DATE |
|---|---|---|
| | | |

PROFESSIONAL ENGINEER
LICENSED
16683
11/6/2020
STATE OF IDAHO
CHRISTOPHER DYKE

MUSGROVE
ENGINEERING, P.A.
234 S. Whisperwood Way
Boise, Idaho 83709
208.384.0585
musgrovepa.com
OVER 40 YEARS OF EXCELLENCE

IDAHO TRANS. DEPT.
MATERIALS LAB MODIFICATION
206 N YELLOWSTONE HWY
RIGBY, IDAHO

| | |
|---|---|
| PROJECT | 20-230 |
| DRAWN | CD |
| CHECKED | TN |
| DATE | 20-11-06 |
| SCALE | SEE PLANS |
| SHEET | P1.0 |

# PLUMBING FIXTURE SCHEDULE

| SYMBOL | FIXTURE DESCRIPTION | CONNECTION SIZE | | | | | MANUFACTURER / MODEL NUMBER / DESCRIPTION / ADDITIONAL COMMENTS |
|---|---|---|---|---|---|---|---|
| | | WASTE | VENT | TRAP | CW | HW | |
| ET-1 | EXPANSION TANK | -- | -- | -- | 3/4 | -- | AMTROL THERM-X-TROL ST-5, OR APPROVED EQUAL, NON-ASME SERIES THERMAL EXPANSION ABSORBER, ANTI-MICROBIAL LINER, AND 5 YEAR WARRANTY. |
| FD-1 | FLOOR DRAIN (DUCTILE IRON BODY) (CONCRETE FLOOR) | 4 | 2 | 4 | -- | -- | SIOUX CHIEF SERIES NUMBER 832-4DNR, POST-CONSTRUCTION LEVELING FLOOR DRAIN, NO-HUB OUTLET, 6-1/2" ROUND, ADJUSTABLE NICKEL BRONZE STRAINER AND TRAP PRIMER PORT. INSTALL TOP OF DRAIN 1/8" BELOW FINISH FLOOR AND CAULK EDGE. |
| RP-1 | RECIRCULATION PUMP (HOT WATER RETURN SYSTEM) | -- | -- | -- | -- | 3/4 | BELL AND GOSSETT BRONZE MODEL NBF-1OS/LW, 115 VOLT, 0.46 AMPS, 55 WATTS, AND SHALL PROVIDE 4 GPM AT 7 FEET HEAD. INCLUDE 7-DAY PROGRAMMABLE ELECTRONIC TIME CLOCK WITH BATTERY BACKUP, INTERMATIC MODEL GM40AVE-RD89. APPROVED ALTERNATE: ARMSTRONG, TACO, GRUNDFOS. SEE CONTROL SCHEMATIC AND SEQUENCE OF OPERATION FOR CONTROL REQUIREMENTS. |
| TP-1 | TRAP PRIMER (PRESSURE ACTIVATED) (1 TO 4 TRAPS) | -- | -- | -- | 1/2" | -- | PRECISION PLUMBING PRODUCTS MODEL CPO-500 WITH DU DISTRIBUTION UNIT IF REQUIRED FOR SERVING MORE THAN ONE TRAP. APPROVED ALTERNATES: MIFAB, SIOUX CHIEF, SLOAN, AND ZURN |
| TS-1 | TEMPERING STATION | -- | -- | -- | SEE PLANS | SEE PLANS | GUARDIAN MODEL G3702LF THERMOSTATIC MIXING VALVE STATION. PROVIDE WITH SURFACE MOUNTED STAINLESS STEEL CABINET. VALVE SHALL BE RATED FOR EMERGENCY SHOWER AND EYEWASH USE. |
| WH-1 | WATER HEATER (30 GALLON) (208V-1Ø ELECTRIC) | -- | -- | -- | SEE PLANS | SEE PLANS | BRADFORD WHITE MODEL LE130L3-1, SINGLE ELEMENT, 4.0 KW, 208V/1Ø, 18" DIAMETER, 25" TALL, WITH SIDE CONNECTIONS. PROVIDE WITH SEISMIC STRAPS AND DRAIN PAN. |

NOTES:

1. ALL ADA COMPLIANT FIXTURES MUST COMPLY WITH ICC/ANSI A117.1.
2. ALL EXPOSED HW PIPING, CW PIPING, AND DRAIN LINES BENEATH ALL LAVATORIES AND ALL ADA COMPLIANT SINKS MUST BE INSULATED TO PREVENT INJURY. REFER TO ARCHITECTURAL PLANS. INSULATE WITH MOLDED CLOSED CELL VINYL INSULATION - TRUEBRO, PLUMBEREX, OR EQUAL.
3. PROVIDE P-TRAP PRIMERS FOR ALL FLOOR DRAINS AND FLOOR SINKS (NOT ALL TRAP PRIMERS ARE INDICATED ON PLANS - REFERENCE DETAILS FOR ADDITIONAL INFORMATION). PROVIDE A BALL TYPE SHUT-OFF VALVE UPSTREAM OF PRIMER VALVE. SEE SPECIFICATIONS.
4. SEE SPECIFICATIONS FOR ALTERNATE APPROVED MANUFACTURERS.

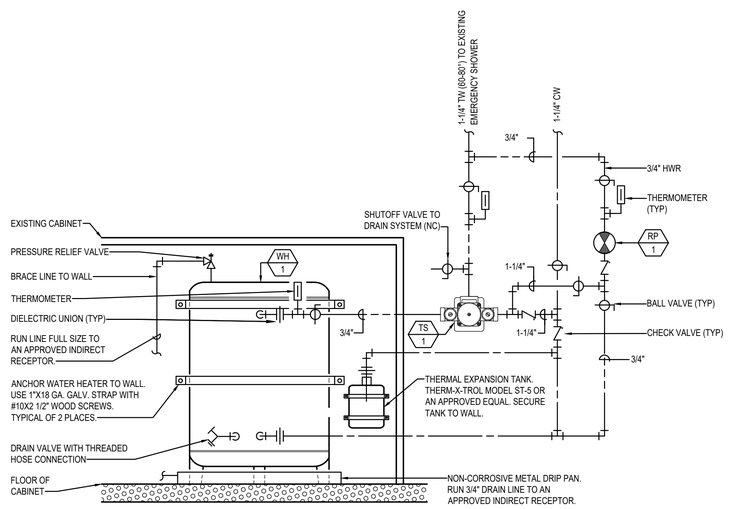


1 DOMESTIC WATER HEATER & TEMPERING STATION PIPING DETAIL

NOT TO SCALE

PRESSSURE ACTIVATED PRIMER NOTES:

1. THE PRIMING VALVE MUST BE INSTALLED ON A FRESH COLD WATER LINE OF 1/2" TO 1-1/2" DIAMETER.
2. DISTRIBUTION UNIT MUST BE INSTALLED LEVEL WITH AN ACCESS DOOR FOR PERIODIC INSPECTION.
3. DO NOT SUBJECT TRAP PRIMER VALVE TO ROUGH-IN PRESSURE TEST.
4. DISTANCE FROM DISTRIBUTION UNIT TO FLOOR MUST BE 12" FOR EVERY 20' HORIZONTALLY.
5. TRAP PRIMER SHALL BE PRECISION PLUMBING PRODUCTS MODEL CPO-500 WITH DU DISTRIBUTION UNIT IF REQUIRED. APPROVED ALTERNATES: MIFAB, SIOUX CHIEF, AND ZURN.

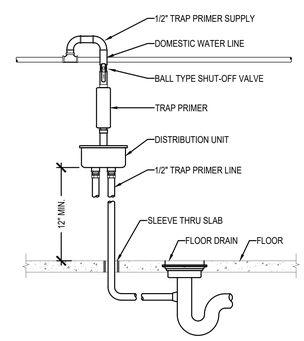


2 TRAP PRIMER CONNECTION DETAIL

NOT TO SCALE

NOTES:

1. MAINTAIN ONE-FOURTH (1/4) INCH PER FOOT SLOPE.
2. THE DEVELOPED LENGTH BETWEEN THE TRAP OF A WATER CLOSET OR SIMILAR FIXTURE (MEASURED FROM THE TOP OF THE CLOSET FLANGE TO THE INNER EDGE OF THE VENT) AND IT'S VENT SHALL NOT EXCEED SIX (6) FEET.
3. ALL PLUMBING EQUIPMENT AND SYSTEMS SHALL BE INSTALLED IN ACCORDANCE WITH THE LATEST ADOPTED PLUMBING CODE, AND ALL LOCAL AND STATE CODES.

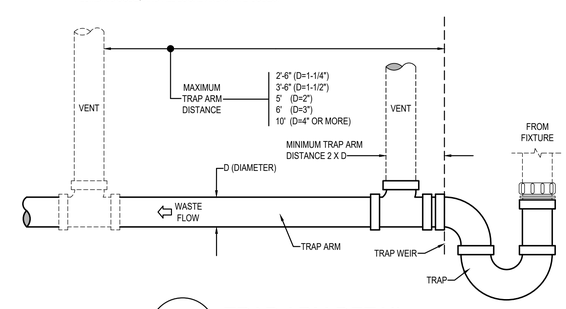


3 TRAP ARM DETAIL

NOT TO SCALE

| NO. | REVISIONS | DATE |
|---|---|---|
| | | |

PROFESSIONAL ENGINEER LICENSED 16683 11/6/2020 STATE OF IDAHO CHRISTOPHER DYKE


MUSGROVE ENGINEERING, P.A.
234 S. Whisperwood Way
Boise, Idaho 83709
208.384.0585
musgrovepa.com
OVER 40 YEARS OF EXCELLENCE


IDAHO TRANS. DEPT.
MATERIALS LAB MODIFICATION
206 N YELLOWSTONE HWY
RIGBY, IDAHO

| | |
|---|---|
| PROJECT | 20-230 |
| DRAWN | CD |
| CHECKED | TN |
| DATE | 20-11-06 |
| SCALE | SEE PLANS |
| SHEET | P2.0 |