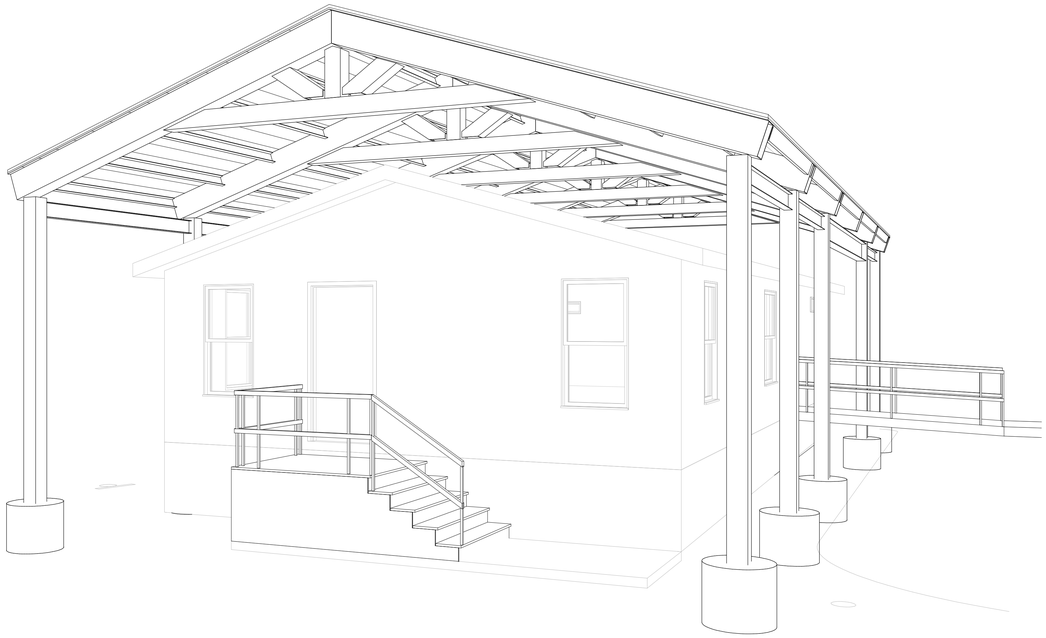

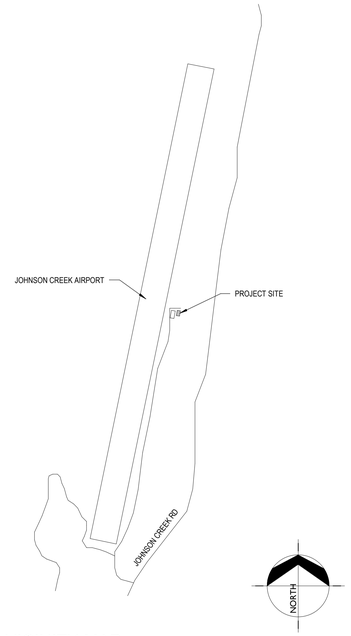

VICINITY MAP

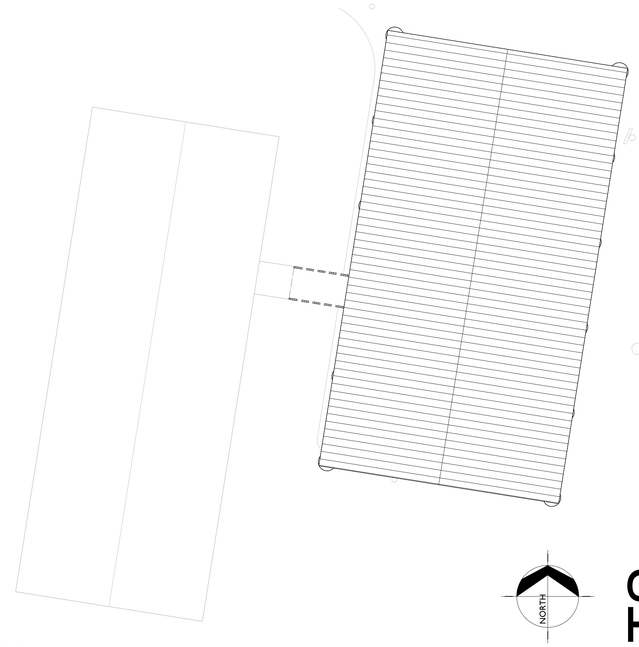

SITE PLAN
1/8" = 1'-0"

PROJECT:

JOHNSON CREEK CARETAKERS BUILDING SNOW ROOF

2085 Johnson Creek Rd
Cascade, ID 83611

CLIENT:

IDAHO TRANSPORTATION DEPARTMENT

H.A.-JOB # 22045

HUMMEL ARCHITECTS

205 N. 10th Street
Suite 300
Boise, Idaho 83702
208.343.7523

482 Constitution Way,
Suite 111
Idaho Falls, ID 83402
208.343.7523

hummelarch.com

CONSULTANTS:

STRUCTURAL ENGINEER
KPFF CONSULTING ENGINEERS

DRAWING INDEX:

GENERAL
G0.00 COVER SHEET

ARCHITECTURAL
A2.01 DEMO FLOOR PLAN AND FLOOR PLAN
A2.02 ROOF PLAN AND DETAILS
A3.01 BUILDING ELEVATIONS

STRUCTURAL

S0.00 ABBREVIATIONS, SYMBOLS AND SHEET INDEX
S0.01 GENERAL STRUCTURAL NOTES
S0.02 GENERAL STRUCTURAL NOTES
S2.01 FOUNDATION PLAN
S2.02 ROOF FRAMING PLAN
S3.01 TRUSS ELEVATIONS
S4.01 CONCRETE DETAILS
S5.01 STEEL DETAILS

GENERAL NOTES:

A. PRIOR TO START OF CONSTRUCTION, CONTRACTOR TO VERIFY POSITION AND CONDITION OF ALL EXISTING BENCHMARKS.
B. EXISTING BENCHMARKS ARE NOT TO BE DISTURBED.
C. ANY DISCREPANCIES IN ACTUAL FIELD CONDITIONS, IF AT ODDS WITH INDICATIONS IN THESE DOCUMENTS, SHALL BE IMMEDIATELY BROUGHT TO THE ATTENTION OF THE ARCHITECT OR CONSTRUCTION MANAGER.
D. PRIME AND PAINT ALL EXPOSED STEEL. PRIME WITH ONE COAT ZINC CLAD PRIMER AND PAINT WITH DTM ACRYLIC COATING. BASIS-OF-DESIGN: SHERWIN WILLIAMS PRO INDUSTRIAL DTM ACRYLIC COATING. COLOR: MATCH SW 9084 COCOA WHIP.
E. CONTRACTOR SHALL REMOVE AND RE-INSTALL THE EXISTING MANUFACTURED BUILDING, TO MATCH EXISTING CONDITIONS, AS REQUIRED TO FACILITATE THE INSTALLATION OF THE SNOW ROOF STRUCTURE.
F. REMOVE AND RE-INSTALL EXISTING BUILDING SUPPORT TO MATCH EXISTING CONDITIONS.

MASTER REFERENCE NOTES:

Reference #	Reference Text
1.01	COORDINATE WITH STRUCTURAL DRAWINGS.
1.04	RE-INSTALL RAMP AND RAILINGS TO MATCH EXISTING CONDITIONS. MAXIMUM SLOPE SHALL NOT EXCEED 1:12".
1.05	APPROXIMATE LOCATION OF EXISTING STORM DRAIN PIPING TO BE RETAINED/RE-USED. CONTRACTOR TO PROVIDE FOR RE-ROUTING, IF NECESSARY, TO ABOID OTHER WORK OF THIS PROJECT.
1.06	REINSTALL EXISTING SALVAGED STAIR, RAILS AND LANDING TO MATCH EXISTING CONDITIONS. EXISTING CONCRETE LOWER LANDING MAY BE REUSED, UNLESS REMOVAL IS REQUIRED TO ACCOMMODATE OTHER WORK OF THE PROJECT. SHOULD REMOVAL BE REQUIRED, CONTRACTOR SHALL PROVIDE A NEW CONCRETE LOWER LANDING TO MATCH EXISTING.
1.08	CONTRACTOR SHALL EXCAVATE/REMOVE, AND DISPOSE OF, EXISTING SOIL AS NECESSARY TO PROVIDE FOR CONCRETE CAST IN PLACE FOUNDATION PADS (REFERENCE NOTE 3.02), ACCOMMODATE RE-INSTALLATION OF EXISTING FOUNDATION SYSTEM, AND MAINTAIN EXISTING FINISH FLOOR ELEVATION. CONTRACTOR MAY STEP THE CAST IN PLACE CONCRETE PADS IN AREAS OF EXCESSIVE GRADE CHANGE.
2.01	CONTRACTOR SHALL REMOVE AND RE-INSTALL THE EXISTING MANUFACTURED BUILDING, TO MATCH EXISTING CONDITIONS, AS REQUIRED TO FACILITATE THE INSTALLATION OF THE SNOW ROOF STRUCTURE.
2.02	EXISTING CONSTRUCTION. PROTECT FROM OTHER WORK OF THE PROJECT.
2.04	EXISTING RAMP AND RAILINGS TO BE REMOVED AND SALVAGED FOR RE-INSTALLATION.
2.07	EXISTING ELECTRICAL SERVICE POLE, SERVICE ENTRANCE, AND ELECTRICAL SERVICE PANEL. CONTRACTOR SHALL DISCONNECT ELECTRICAL SERVICE, PROTECT FOR REUSE, AND RECONNECT.
2.10	EXISTING STAIR, RAILS AND LANDING TO BE REMOVED AND SALVAGED FOR RE-INSTALLATION.
2.11	EXISTING STORM DRAIN INLET TO REMAIN. PROTECT FROM OTHER WORK OF THE PROJECT.
2.12	EXISTING SEPTIC SYSTEM. CONTRACTOR SHALL DISCONNECT, PROTECT FOR REUSE, AND RE-INSTALL/RECONNECT.
2.13	EXISTING TREE. PRESERVE AND PROTECT.
2.14	EXISTING SLOPE STABILIZATION PLANTS AND ROCKS TO BE REMOVED AS REQUIRED TO ACCOMMODATE THE WORK OF THIS PROJECT. CONTRACTOR SHALL RE-INSTALL ROCKS AND RE-ESTABLISH PLANTINGS TO MATCH EXISTING CONDITIONS.
2.15	EXISTING FOUNDATION SKIRTING SYSTEM. REMOVE AND REPLACE TO MATCH EXISTING.
3.01	CAST-IN-PLACE CONCRETE
3.02	CAST-IN-PLACE CONCRETE FOUNDATION PADS. SEE STRUCTURAL.
5.01	SNOW ROOF STRUCTURE STEEL COLUMN. SEE STRUCTURAL.
5.02	COLD-FORMED METAL TRUSSES
5.03	STEEL ANGLE
5.04	STEEL PLATE AT END OF TRUSS
5.05	STEEL BEAM. SEE STRUCTURAL.
7.01	24 GA. STANDING SEAM METAL ROOF PANELS. BASIS-OF-DESIGN: MBCI SUPERLOK. COLOR: FERN GREEN.
7.02	SUPPORT PLATE
7.03	RIDGE TRIM
7.04	RAKE SUPPORT ANGLE
7.05	DRIP EDGE
7.06	PROVIDE A MINIMUM OF TWO ROWS OF METAL SEAM/RIB MOUNTED SNOW CLIPS ON EACH METAL ROOF SEAM. THE FIRST ROW OF CLIPS SHALL BE PLACED DIRECTLY ABOVE THE EAVE BEARING POINT, WITH THE SECOND ROW AT 15" ABOVE THE FIRST.

ROOF TYPE
1 1/2" = 1'-0"

ROOF TYPE:	FIRE RATING:
RF-01	FIRE TEST:

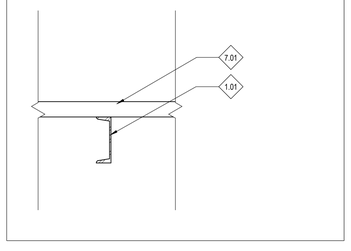

CODE INFORMATION:

PROJECT SCOPE:

CARETAKER MANUFACTURED BUILDING AREA: 1,072 SF
SNOW BEARING STRUCTURE AREA: 1,668 SF

WORK OF THE PROJECT IS THE INSTALLATION OF AN ENGINEERED STEEL SNOW BEARING STRUCTURE ABOVE AN EXISTING SEASONALLY OCCUPIED CARETAKER MANUFACTURED RESIDENCE.

IN ORDER TO FACILITATE THE INSTALLATION OF THE SNOW BEARING STRUCTURE THE REMOVAL AND REINSTALLATION OF THE EXISTING CARETAKER MANUFACTURED RESIDENCE IS NECESSARY.

ALL WORK PERFORMED SHALL COMPLY WITH THE FOLLOWING CODES:

ARCHITECTURE:
2018 INTERNATIONAL RESIDENTIAL CODE (IRC)
2018 INTERNATIONAL BUILDING CODE (IBC)

FIRE PROTECTION:
2018 INTERNATIONAL FIRE CODE

MECHANICAL:
2018 INTERNATIONAL MECHANICAL CODE

PLUMBING:
2018 UNIFORM PLUMBING CODE

ELECTRICAL:
2020 NATIONAL ELECTRICAL CODE (NEC)

SYMBOLS:

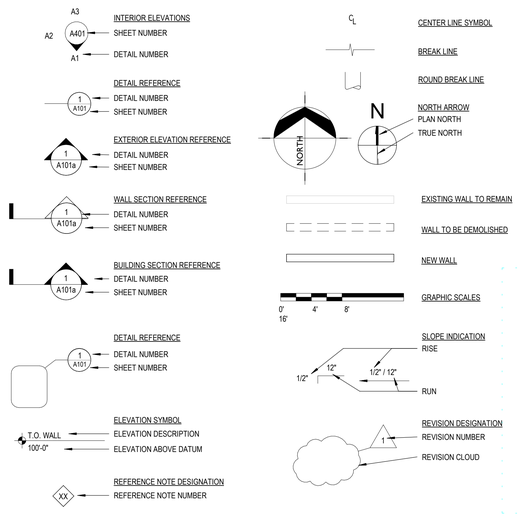

CONSTRUCTION DOCUMENTS

DRAWING SET NO.

LICENSED PROFESSIONAL ARCHITECT
AR-1035
STATE OF IDAHO
STEPHEN L. HUMMEL

12.2.2022

Autodesk Docs://22045 Johnson Creek Caretakers Building/22045 - Johnson Creek Caretakers Building_22.rvt
12/5/2022 10:49:42 AM

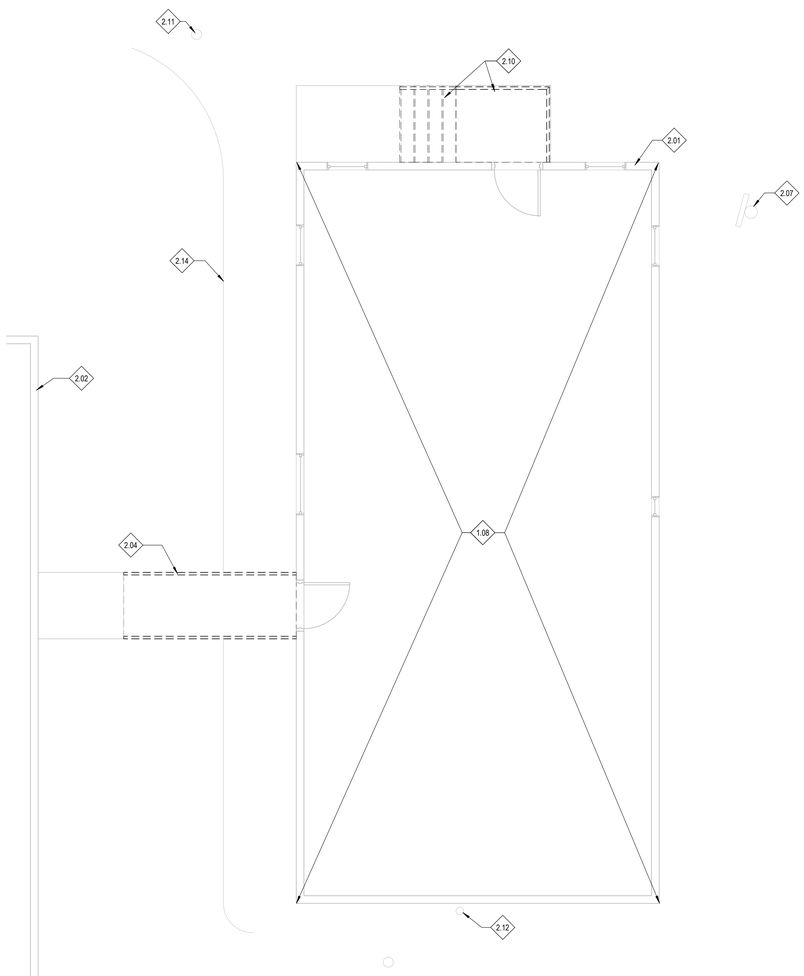

E1 A2.01 LEVEL 01 - DEMO FLOOR PLAN
1/4" = 1'-0"

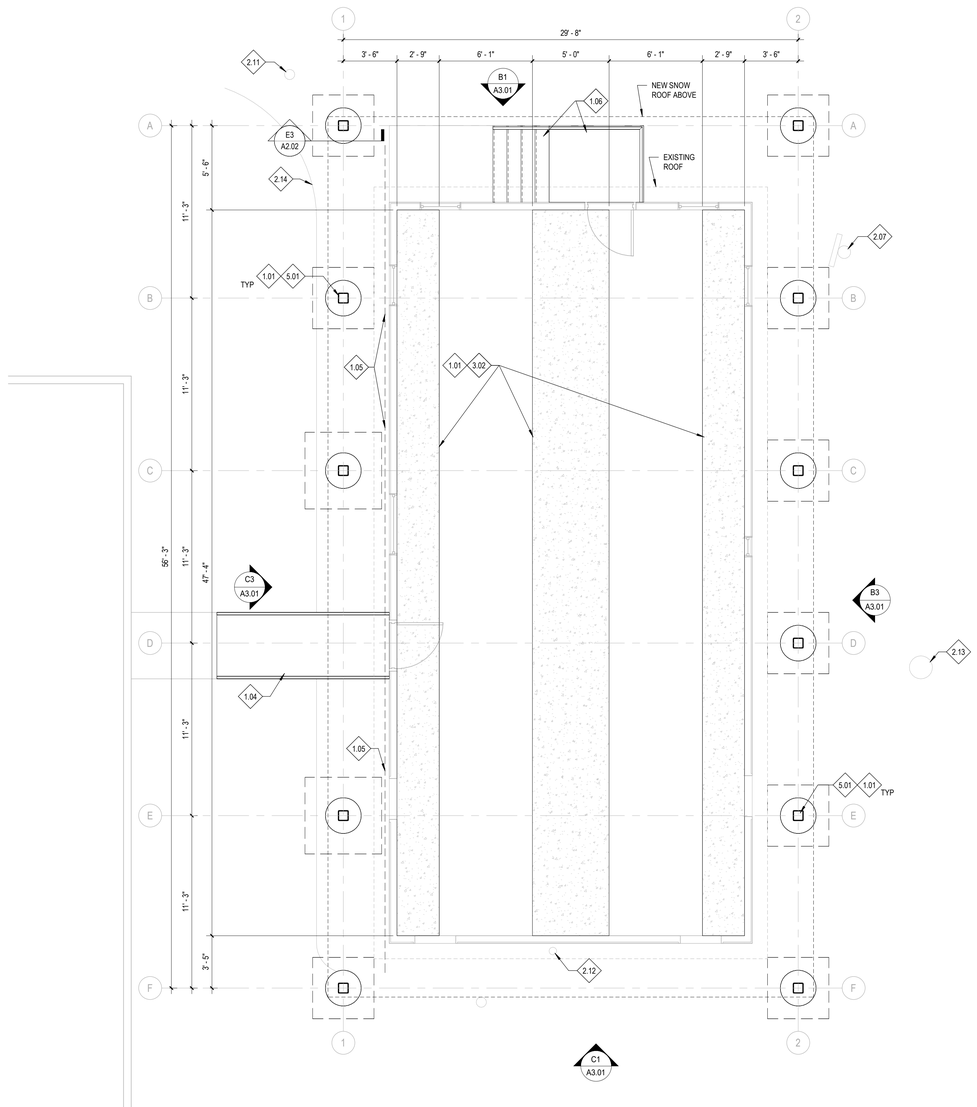

E4 A2.01 LEVEL 01 - FLOOR PLAN
1/4" = 1'-0"

GENERAL NOTES

A. PLAN WALL DIMENSIONS ARE TO GRID LINE OR FACE OF WALL STRUCTURE. "CLEAR" DIMENSIONS ARE TO FACE OF WALL FINISH.
B. FIELD VERIFY ALL EXISTING CONDITIONS AND THEIR COMPATIBILITY WITH NEW CONSTRUCTION PRIOR TO THE COMMENCEMENT OF WORK. COORDINATE DISCREPANCIES WITH ARCHITECT.
C. DO NOT SCALE DRAWINGS.
D. SEE STRUCTURAL DRAWINGS FOR MORE INFORMATION.
E. PRIME AND PAINT ALL EXPOSED STEEL. PRIME WITH ONE COAT ZINC CLAD PRIMER AND PAINT WITH DTM ACRYLIC COATING. BASIS-OF-DESIGN: SHERWIN WILLIAMS PRO INDUSTRIAL DTM ACRYLIC COATING. COLOR: MATCH SW 9084 COCOA WHIP.

REFERENCE NOTES

1.01 COORDINATE WITH STRUCTURAL DRAWINGS.
1.04 RE-INSTALL RAMP AND RAILINGS TO MATCH EXISTING CONDITIONS. MAXIMUM SLOPE SHALL NOT EXCEED 1:12".
1.05 APPROXIMATE LOCATION OF EXISTING STORM DRAIN PIPING TO BE RETAINED/RE-USED. CONTRACTOR TO PROVIDE FOR RE-ROUTING, IF NECESSARY, TO ABOID OTHER WORK OF THIS PROJECT.
1.06 REINSTALL EXISTING SALVAGED STAIR, RAILS AND LANDING TO MATCH EXISTING CONDITIONS. EXISTING CONCRETE LOWER LANDING MAY BE REUSED, UNLESS REMOVAL IS REQUIRED TO ACCOMMODATE OTHER WORK OF THE PROJECT. SHOULD REMOVAL BE REQUIRED, CONTRACTOR SHALL PROVIDE A NEW CONCRETE LOWER LANDING TO MATCH EXISTING.
1.08 CONTRACTOR SHALL EXCAVATE/REMOVE, AND DISPOSE OF, EXISTING SOIL AS NECESSARY TO PROVIDE FOR CONCRETE CAST IN PLACE FOUNDATION PADS (REFERENCE NOTE 3.02). ACCOMMODATE RE-INSTALLATION OF EXISTING FOUNDATION SYSTEM, AND MAINTAIN EXISTING FINISH FLOOR ELEVATION. CONTRACTOR MAY STEP THE CAST IN PLACE CONCRETE PADS IN AREAS OF EXCESSIVE GRADE CHANGE.
2.01 CONTRACTOR SHALL REMOVE AND RE-INSTALL THE EXISTING MANUFACTURED BUILDING. TO MATCH EXISTING CONDITIONS, AS REQUIRED TO FACILITATE THE INSTALLATION OF THE SNOW ROOF STRUCTURE.
2.02 EXISTING CONSTRUCTION. PROTECT FROM OTHER WORK OF THE PROJECT.
2.04 EXISTING RAMP AND RAILINGS TO BE REMOVED AND SALVAGED FOR RE-INSTALLATION.
2.07 EXISTING ELECTRICAL SERVICE POLE, SERVICE ENTRANCE, AND ELECTRICAL SERVICE PANEL. CONTRACTOR SHALL DISCONNECT ELECTRICAL SERVICE, PROTECT FOR REUSE, AND RECONNECT.
2.10 EXISTING STAIR, RAILS AND LANDING TO BE REMOVED AND SALVAGED FOR RE-INSTALLATION.
2.11 EXISTING STORM DRAIN INLET TO REMAIN. PROTECT FROM OTHER WORK OF THE PROJECT.
2.12 EXISTING SEPTIC SYSTEM. CONTRACTOR SHALL DISCONNECT, PROTECT FOR REUSE, AND RE-INSTALL/RECONNECT.
2.13 EXISTING TREE. PRESERVE AND PROTECT.
2.14 EXISTING SLOPE STABILIZATION PLANTS AND ROCKS TO BE REMOVED AS REQUIRED TO ACCOMMODATE THE WORK OF THIS PROJECT. CONTRACTOR SHALL RE-INSTALL ROCKS AND RE-ESTABLISH PLANTINGS TO MATCH EXISTING CONDITIONS.
3.02 CAST-IN-PLACE CONCRETE FOUNDATION PADS. SEE STRUCTURAL.
5.01 SNOW ROOF STRUCTURE STEEL COLUMN. SEE STRUCTURAL.

HUMMEL ARCHITECTS
205 N. 10th Street
Suite 300
Boise, Idaho 83702
208.343.7523
482 Constitution Way,
Suite 111
Idaho Falls, ID 83402
208.343.7523
hummelarch.com

Project:
JOHNSON CREEK
CARETAKERS BUILDING
SNOW ROOF
2085 Johnson Creek Rd
Cascade, ID 83611

Sheet:
DEMO FLOOR PLAN AND
FLOOR PLAN

CONSTRUCTION DOCUMENTS

LICENSED PROFESSIONAL ARCHITECT AR-1635 STATE OF IDAHO
12.2.2022

Revisions:

Project No:	22045
Drawn By:	LE
Checked By:	TB / MB
Date:	12/2/2022

Sheet No:
A2.01

12/5/2022 10:49:40 AM

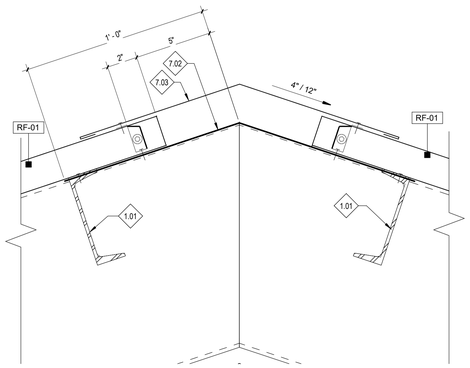

B1 / A2.02 RIDGE DETAIL
3" = 1'-0"

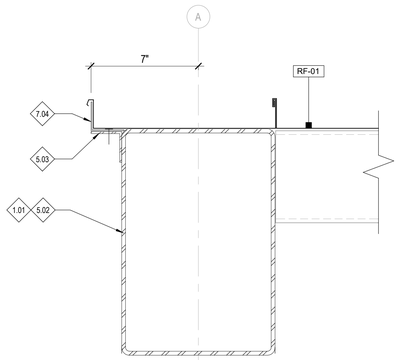

C1 / A2.02 RAKE DETAIL
3" = 1'-0"

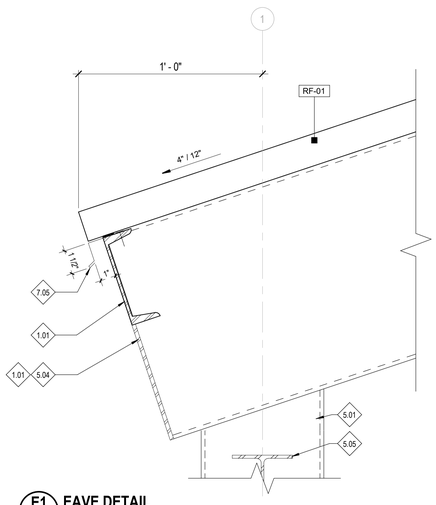

E1 / A2.02 EAVE DETAIL
3" = 1'-0"

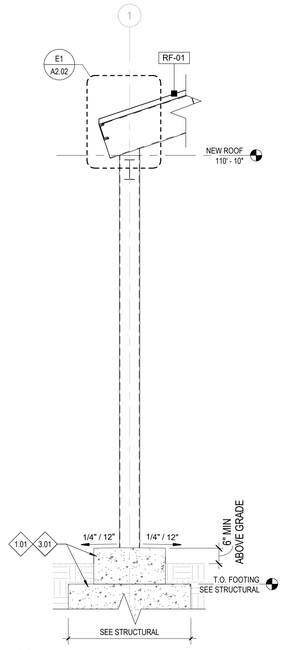

E3 / A2.02 SECTION 1
1/2" = 1'-0"

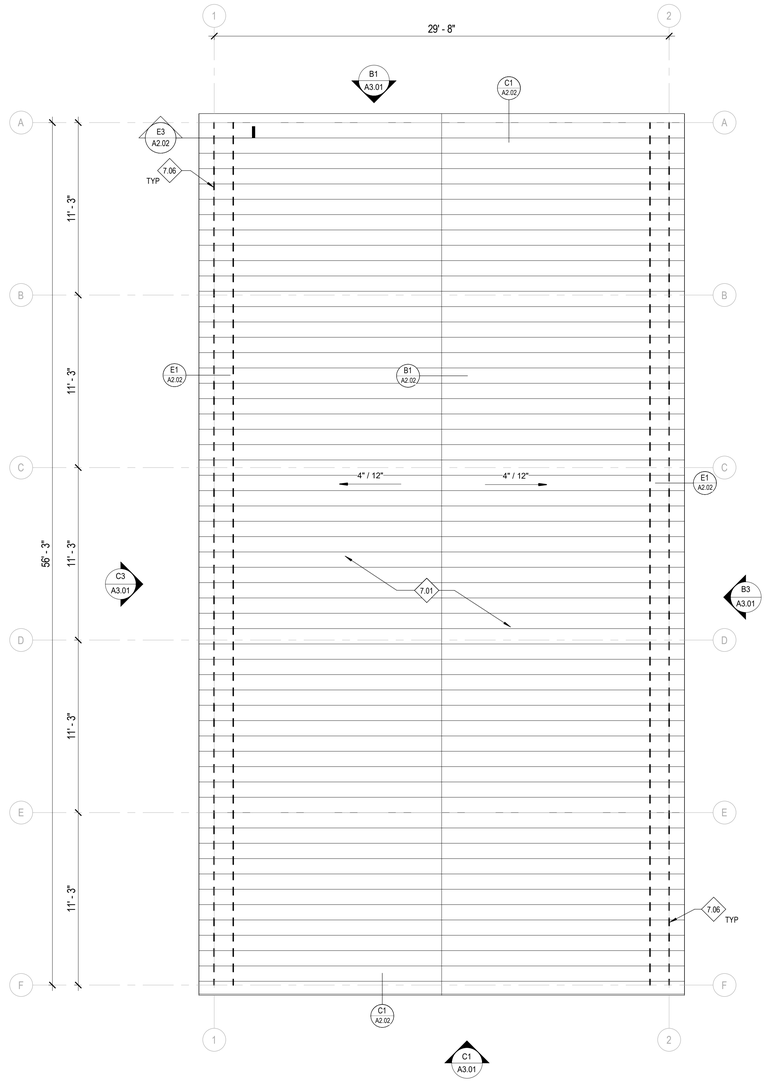

E4 / A2.02 ROOF PLAN
1/4" = 1'-0"

GENERAL NOTES

A. ALL METAL ROOF FLASHING DETAILS SHALL BE PER MANUFACTURER'S RECOMMENDATIONS AND REVIEWED BY THE ARCHITECT FOR DESIGN INTENT.
B. SEE STRUCTURAL FRAMING PLAN FOR ROOF DECK HEIGHTS TO ESTABLISH ROOF SLOPES AND ROOF MEMBER LOCATIONS.
C. ALL FINISHED ROOF SLOPES TO ACHIEVE A MINIMUM OF 4" PER FOOT SLOPE IN DIRECTION INDICATED. IT IS THE RESPONSIBILITY OF THE ROOFING CONTRACTOR TO INSTALL ROOFING COMPONENTS TO MEET THESE REQUIREMENTS.
D. ALL DIMENSIONS ARE FOR GENERAL ARRANGEMENT AND LOCATION ONLY. ACTUAL REQUIREMENTS AND DIMENSIONS ARE TO BE VERIFIED AND COORDINATED WITH EQUIPMENT, OTHER CONSTRUCTION TRADES, SHOP DRAWINGS AND STRUCTURAL FRAMING.
E. CONSTRUCTION SHALL BE IN FULL COMPLIANCE WITH ALL CURRENT LOCAL CODES AND REGULATIONS IN EFFECT AT THE TIME OF AGREEMENT BETWEEN OWNER AND CONTRACTOR.
F. DETAILS IN THE PROJECT DRAWING ARE SHOWN AT SPECIFIC LOCATIONS AND ARE INTENDED TO SHOW GENERAL REQUIREMENTS THROUGHOUT.
G. RE: EXTERIOR ELEVATIONS FOR RIDGE HEIGHTS.
H. RE: SHEET G0.00 FOR ROOF ASSEMBLIES.
I. FOR SIZE AND CONNECTION DETAILS OF STEEL FRAMING COMPONENTS (BEAMS AND COLUMNS), STEEL JOISTS AND GIRDERS, STEEL DECKING AND OTHER STEEL SECTIONS, REFER TO STRUCTURAL DRAWINGS.
J. FOR ROOF OVERHANG DIMENSIONS, COORDINATE WITH EXTERIOR WALL SECTIONS.
K. PRIME AND PAINT ALL EXPOSED STEEL. PRIME WITH ONE COAT ZINC CLAD PRIMER AND PAINT WITH DTM ACRYLIC COATING. BASIS-OF-DESIGN: SHERWIN WILLIAMS PRO INDUSTRIAL DTM ACRYLIC COATING. COLOR: MATCH SW 9084 COCOA WHIP.
L. FOR REINFORCING OF CONCRETE SLABS, FOOTINGS AND FOUNDATIONS, COORDINATE WITH STRUCTURAL DRAWINGS.
M. DO NOT SCALE DRAWINGS.

REFERENCE NOTES

1.01	COORDINATE WITH STRUCTURAL DRAWINGS.
3.01	CAST-IN-PLACE CONCRETE
5.01	SNOW ROOF STRUCTURE STEEL COLUMN. SEE STRUCTURAL.
5.02	COLD-FORMED METAL TRUSSES
5.03	STEEL ANGLE
5.04	STEEL PLATE AT END OF TRUSS
5.05	STEEL BEAM. SEE STRUCTURAL.
7.01	24 GA. STANDING SEAM METAL ROOF PANELS. BASIS-OF-DESIGN: MBCI SUPERLOK. COLOR: FERN GREEN.
7.02	SUPPORT PLATE
7.03	RIDGE TRIM
7.04	RAKE SUPPORT ANGLE
7.05	DRIP EDGE
7.06	PROVIDE A MINIMUM OF TWO ROWS OF METAL SEAM/RIB MOUNTED SNOW CLIPS ON EACH METAL ROOF SEAM. THE FIRST ROW OF CLIPS SHALL BE PLACED DIRECTLY ABOVE THE EAVE BEARING POINT, WITH THE SECOND ROW AT 15" ABOVE THE FIRST.

LEGEND

STANDING SEAM METAL ROOF.
BASIS-OF-DESIGN: MBCI SUPERLOK.

HUMMEL ARCHITECTS
205 N. 10th Street
Suite 320
Boise, Idaho 83702
208.343.7523
482 Constitution Way,
Suite 111
Idaho Falls, ID 83402
208.343.7523
hummelarch.com

Project:
JOHNSON CREEK
CARETAKERS BUILDING
SNOW ROOF
2085 Johnson Creek Rd
Cascade, ID 83611

Sheet:
ROOF PLAN AND DETAILS

CONSTRUCTION DOCUMENTS

LICENSED PROFESSIONAL ARCHITECT AR-1635 STATE OF IDAHO
12.2.2022

Revisions:

Project No:	22045
Drawn By:	LE
Checked By:	TB / MB
Date:	12/2/2022

Sheet No:
A2.02

12/5/2022 10:49:41 AM

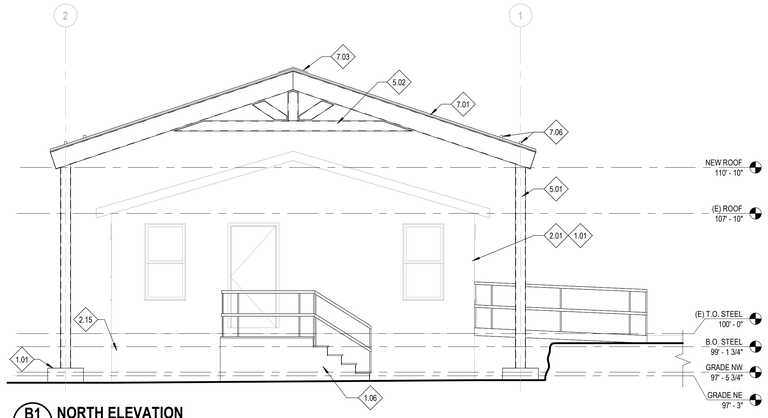

B1 / A3.01 NORTH ELEVATION
1/4" = 1'-0"

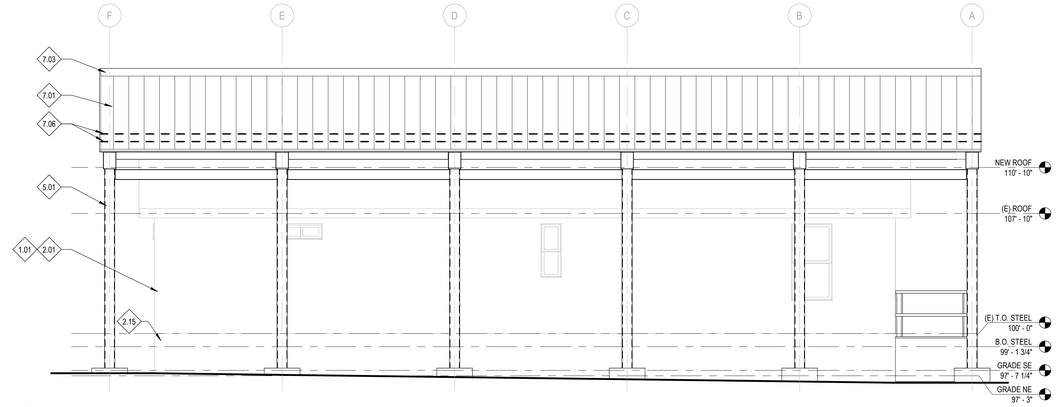

B3 / A3.01 EAST ELEVATION
1/4" = 1'-0"

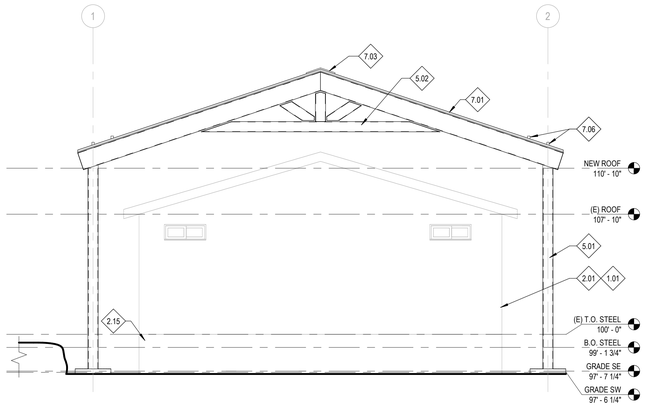

C1 / A3.01 SOUTH ELEVATION
1/4" = 1'-0"

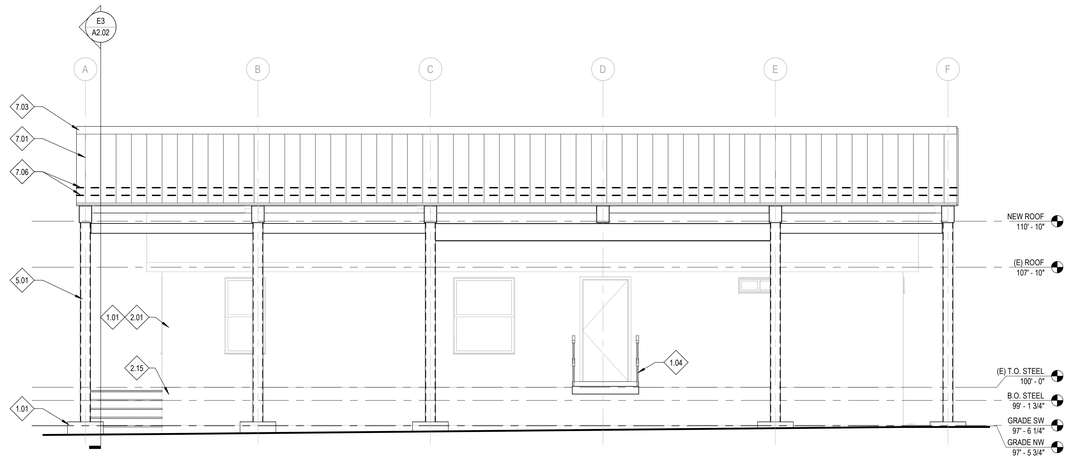

C3 / A3.01 WEST ELEVATION
1/4" = 1'-0"

GENERAL NOTES

A. RE: STRUCTURAL FOR CONCRETE REINFORCING.

REFERENCE NOTES

1.01	COORDINATE WITH STRUCTURAL DRAWINGS.
1.04	RE-INSTALL RAMP AND RAILINGS TO MATCH EXISTING CONDITIONS. MAXIMUM SLOPE SHALL NOT EXCEED 1:12".
1.06	REINSTALL EXISTING SALVAGED STAIR, RAILS AND LANDING TO MATCH EXISTING CONDITIONS. EXISTING CONCRETE LOWER LANDING MAY BE REUSED, UNLESS REMOVAL IS REQUIRED TO ACCOMMODATE OTHER WORK OF THE PROJECT. SHOULD REMOVAL BE REQUIRED, CONTRACTOR SHALL PROVIDE A NEW CONCRETE LOWER LANDING TO MATCH EXISTING.
2.01	CONTRACTOR SHALL REMOVE AND RE-INSTALL THE EXISTING MANUFACTURED BUILDING, TO MATCH EXISTING CONDITIONS, AS REQUIRED TO FACILITATE THE INSTALLATION OF THE SNOW ROOF STRUCTURE.
2.15	EXISTING FOUNDATION SKIRTING SYSTEM. REMOVE AND REPLACE TO MATCH EXISTING.
5.01	SNOW ROOF STRUCTURE STEEL COLUMN. SEE STRUCTURAL.
5.02	COLD-FORMED METAL TRUSSES
7.01	24 GA. STANDING SEAM METAL ROOF PANELS. BASIS-OF-DESIGN: MBCI SUPERLOK. COLOR: FERN GREEN.
7.03	RIDGE TRIM
7.06	PROVIDE A MINIMUM OF TWO ROWS OF METAL SEAM/RIB MOUNTED SNOW CLIPS ON EACH METAL ROOF SEAM. THE FIRST ROW OF CLIPS SHALL BE PLACED DIRECTLY ABOVE THE EAVE BEARING POINT, WITH THE SECOND ROW AT 15" ABOVE THE FIRST.

HUMMEL ARCHITECTS
205 N. 10th Street
Suite 300
Boise, Idaho 83702
208.343.7523
482 Constitution Way,
Suite 111
Idaho Falls, ID 83402
208.343.7523
hummelarch.com

Project:
JOHNSON CREEK
CARETAKERS BUILDING
SNOW ROOF
2085 Johnson Creek Rd
Cascade, ID 83611

Sheet:
BUILDING ELEVATIONS

CONSTRUCTION DOCUMENTS

LICENSED PROFESSIONAL ARCHITECT
AR-1635
STATE OF IDAHO
MATT J. STEARNS
12.2.2022

Revisions:

Project No:	22045
Drawn By:	LE
Checked By:	TB / MB
Date:	12/2/2022

Sheet No:
A3.01

12/5/2022 10:49:41 AM

STRUCTURAL SHEET INDEX

SHEET NUMBER	SHEET NAME	ISSUE LOG: 100% DD	ISSUE LOG: PERMIT SET
S0.00	ABBREVIATIONS, SYMBOLS AND SHEET INDEX		
S0.01	GENERAL STRUCTURAL NOTES		
S0.02	GENERAL STRUCTURAL NOTES		
S2.01	FOUNDATION PLAN		
S2.02	ROOF FRAMING PLAN		
S3.01	TRUSS ELEVATIONS		
S4.01	CONCRETE DETAILS		
S5.01	STEEL DETAILS		

ISSUE LOG KEY:
- X ISSUED AS PART OF A SET
- - NOT AS PART OF ISSUED SET
- * FOR INFORMATION ONLY

STRUCTURAL ABBREVIATIONS

(E)	EXISTING
AB	ANCHOR BOLT
ADD'L	ADDITIONAL
ADJ	ADJUSTABLE
AESS	ARCHITECTURALLY EXPOSED STRUCTURAL STEEL
AFF	ABOVE FINISH FLOOR
ANCH	ANCHOR
ARCH	ARCHITECTURAL
B.O.	BOTTOM OF
BLDG	BUILDING
BLKG	BLOCKING
BM	BEAM
BN	DIAPHRAGM BOUNDARY NAILING
BOT	BOTTOM
BRG	BEARING
BSMT	BASEMENT
BTWN	BETWEEN
C	CAMBER
CAP	CAPACITY
CC	CENTER TO CENTER
CDF	CONTROLLED DENSITY FILL
CIP	CAST-IN-PLACE
CJ	CONSTRUCTION OR CONTROL JOINT
CJP	COMPLETE JOINT PENETRATION
CL	CENTERLINE
CLG	CEILING
CLR	CLEAR
CMU	CONCRETE MASONRY UNIT
COL	COLUMN
CONC	CONCRETE
CONN	CONNECTION
CONST	CONSTRUCTION
CONT	CONTINUOUS
COORD	COORDINATE
CTR	CENTER
CY	CUBIC YARD
DBA	DEFORMED BAR ANCHOR
DBL	DOUBLE
DCW	DEMAND CRITICAL WELD
DEMO	DEMOLISH
DET	DETAIL
DF	DOUGLAS FIR
DIA	DIAMETER
DIAG	DIAGONAL
DKG	DECKING
DN	DOWN
DWF	DEFORMED WIRE FABRIC
DWG	DRAWING
DWL	DOWEL
EA	EACH
EF	EACH FACE
EL	ELEVATION
ELECT	ELECTRICAL
ELEV	ELEVATOR
EN	PANEL EDGE NAILING
EQ	EQUAL OR EQUIPMENT
ES	EACH SIDE
EW	EACH WAY
EXP	EXPANSION
EXT	EXTERIOR
F	FAHRENHEIT
FD	FLOOR DRAIN
FDN	FOUNDATION
FF	FINISH FLOOR
FLR	FLOOR
FOB	FACE OF BUILDING
FS	FAR SIDE
FT	FEET
FTG	FOOTING
GA	GAUGE
GALV	GALVANIZED
GB	GRADE BEAM
GEN	GENERAL
GL	GLUED LAMINATED TIMBER
GOV	GOVERNMENT
GR	GRADE
GWB	GYPSUM WALL BOARD
HF	HEM-FIR
HGR	HANGER
HK	HOOK
HORIZ	HORIZONTAL
HP	HIGH POINT
HSS	HOLLOW STRUCTURAL SECTION
IBC	INTERNATIONAL BUILDING CODE
ID	INSIDE DIAMETER
IE	INVERT ELEVATION
IF	INSIDE FACE
IN	INCH
INFO	INFORMATION
INT	INTERIOR
JST	JOIST
JT	JOINT
K	KIP (1,000 LBS.)
KSF	KIPS PER SQUARE FOOT
LF	LINEAL FOOT
LFH	LONG FACE HORIZONTAL
LLH	LONG LEG HORIZONTAL
LLV	LONG LEG VERTICAL
LNGT	LONGITUDINAL
LP	LOW POINT
LSL	LAMINATED STRAND LUMBER
LVL	LAMINATED VENEER LUMBER
MAX	MAXIMUM
MECH	MECHANICAL
MFR	MANUFACTURER
MIN	MINIMUM
MISC	MISCELLANEOUS
NIC	NOT IN CONTRACT
NO	NUMBER
NOM	NOMINAL
NS	NEAR SIDE
NS	NONSHRINK
NTS	NOT TO SCALE
OC	ON CENTER
OD	OUTSIDE DIAMETER
OF	OUTSIDE FACE
OPNG	OPENING
OPP	OPPOSITE
PAF	POWER ACTUATED FASTENER
PC	PIECE
PC	PILE CAP
PEN	PENETRATION
PJP	PARTIAL JOINT PENETRATION
PL	PLATE
PLWD	PLYWOOD
PSF	POUNDS PER SQUARE FOOT
PSI	POUNDS PER SQUARE INCH
PT	POST-TENSIONED
PT	PRESERVATIVE-TREATED
PWT	PREFABRICATED WOOD TRUSS
R	RADIUS
RD	ROOF DRAIN
REINF	REINFORCING
REQ'D	REQUIRED
RND	ROUND
RO	ROUGH OPENING
RTN	RETURN
SC	SLIP CRITICAL
SCHED	SCHEDULE
SECT	SECTION
SFRS	SEISMIC FORCE-RESISTING SYSTEM
SHT	SHEET
SHTG	SHEATHING
SIM	SIMILAR
SOG	SLAB-ON-GRADE
SPEC	SPECIFICATION
SQ	SQUARE
SS	STAINLESS STEEL
STD	STANDARD
STIFF	STIFFENER
STIRR	STIRRUP
STL	STEEL
STRUCT	STRUCTURAL
SUPP	SUPPORT
SYM	SYMMETRICAL
T&B	TOP AND BOTTOM
T&G	TONGUE AND GROOVE
T.O.	TOP OF
THK	THICK(NESS)
THRU	THROUGH
TRANS	TRANSVERSE
TYP	TYPICAL
UNO	UNLESS NOTED OTHERWISE
UT	ULTRASONIC TESTING
VERT	VERTICAL
VIF	VERIFY IN FIELD
W/	WITH
W/O	WITHOUT
WD	WOOD
WF	WIDE FLANGE
WHS	WELDED HEADED STUD
WP	WORK POINT

STRUCTURAL DRAWING SYMBOLS

- 10 — GRIDLINE
- SURFACE - SLOPE UP
- SURFACE - STEPPED
- SURFACE - SLOPE DOWN
- SURFACE - SLOPE TWO WAYS
- UNDISTURBED SOIL, COMPACTED SOIL, BACKFILL, OR ANY PREPARED SUBGRADE.
- PLAN NORTH — NORTH ARROW
- X / SX.XX — DETAIL SYMBOL
- X / SX.XX — BUILDING SECTION CUTS
- X / SX.XX — ELEVATION OF WALL OR FRAME
- A — A — DETAIL SECTION
- T.O. XXXX / EL = XX'-XX" — SPOT ELEVATION AS INDICATED
  - T.O. DECK
  - T.O.CONC.
  - T.O. STEEL
  - T.O. PLY
  - DECK BRG
- LEVEL XX — ELEVATION OF LEVEL
- WP — WORKPOINT
- DN — DIRECTION OF DOWNWARD SLOPE
- CONCRETE WALL ABOVE
- CMU WALL ABOVE
- WOOD/CFS STRUCTURAL WALL ABOVE
- WALL BELOW

ISOMETRIC VIEWS

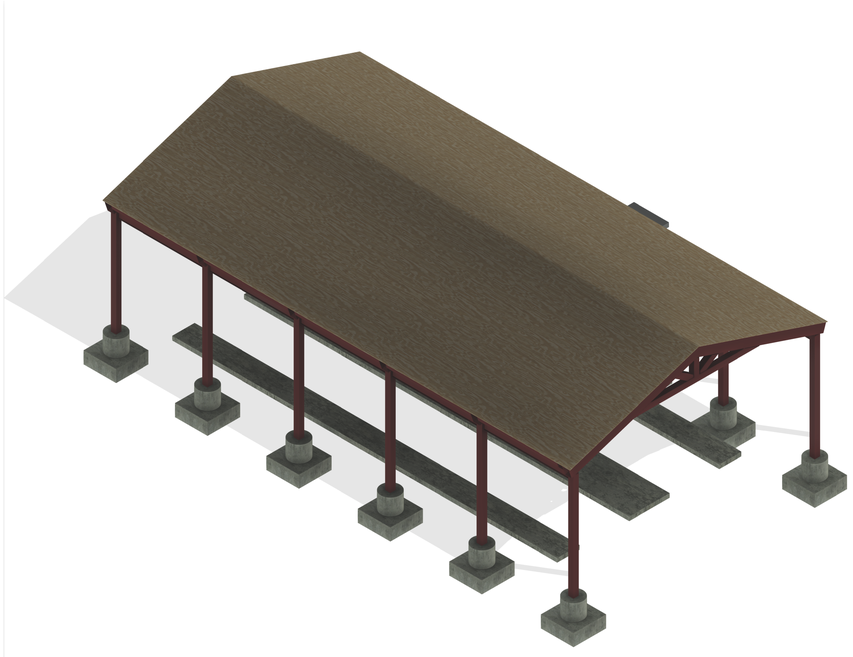

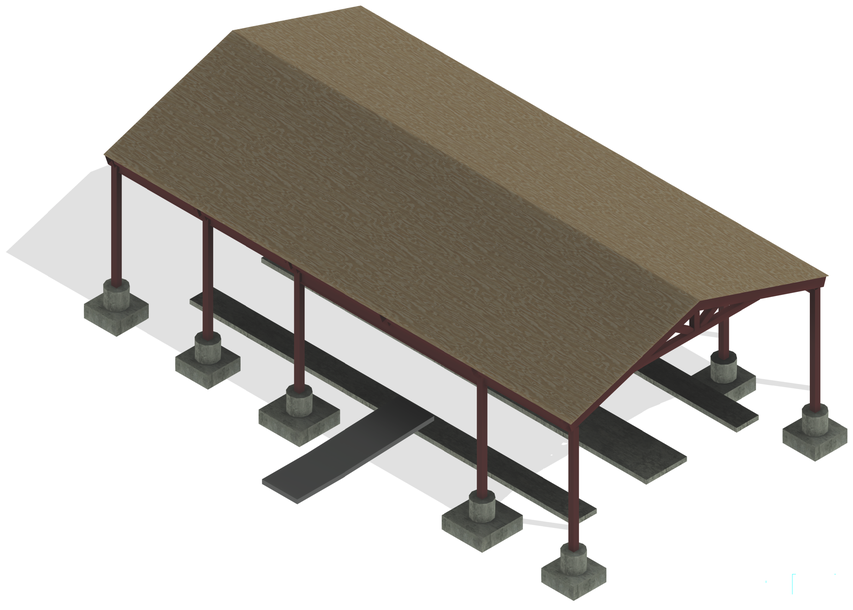

PROFESSIONAL ENGINEER REGISTERED 12033 STATE OF IDAHO JOSEPH M. WILLIAMS

kpff
412 E. Park Center Blvd.
Suite 200
Boise, ID 83706
O: 208.336.6985
www.kpff.com

HUMMEL ARCHITECTS
205 N. 10th Street
Suite 300
Boise, Idaho 83702
208.343.7523
482 Constitution Way,
Suite 111
Idaho Falls, ID 83402
208.343.7523
hummelarch.com

Project:
JOHNSON CREEK
CARETAKERS BUILDING
SNOW ROOF
2085 Johnson Creek Rd
Cascade, ID 83611

Sheet:
ABBREVIATIONS, SYMBOLS AND SHEET INDEX

Revisions:

CONSTRUCTION DOCUMENT

Project No:	10212200126
Drawn By:	H. WONG
Checked By:	J. PARKS
Date:	12/2/2022

Sheet No: S0.00

12/2/2022 2:51:28 PM

GENERAL STRUCTURAL NOTES

CAST-IN-PLACE CONCRETE:

GENERAL:

1. COMPLY WITH THE PROVISIONS OF ACI 301 AND ACI 117, EXCEPT AS MODIFIED BY THESE CONTRACT DOCUMENTS.
2. MANUFACTURER QUALIFICATIONS: CERTIFIED ACCORDING TO NRMCA's "CERTIFICATION OF READY MIXED CONCRETE PRODUCTION FACILITIES.
3. QUALIFICATIONS:
   A. INSTALLER QUALIFICATIONS: ACI-CERTIFIED CONCRETE FLATWORK TECHNICIAN
   B. MANUFACTURER QUALIFICATIONS: CERTIFIED ACCORDING TO NRMCA'S "CERTIFICATION OF READY MIXED CONCRETE PRODUCTION FACILITIES"
4. SUBMITTALS:
   A. DESIGN MIXTURES FOR EACH CONCRETE MIXTURE. INCLUDE THE FOLLOWING WITH EACH MIX DESIGN:
      - INTENDED LOCATION OR USE OF THE MIX DESIGN
      - SUPPORTING STRENGTH TEST DATA
      - STATISTICAL ANALYSIS, DEMONSTRATING COMPLIANCE WITH ACI 301
      - WATER/CEMENT RATIO
      - SLUMP. WHEN HIGH RANGE WATER REDUCING ADMIXTURES ARE USED, INDICATE SLUMP BEFORE AND AFTER ADDITION OF ADMXTURE.
      - GRADATION OF FINE AND COURSE AGGREGATE
      - AIR CONTENT OF FRESHLY MIXED CONCRETE
      - MATERIAL CERTIFICATES FOR CEMENTITIOUS MATERIALS AND ADMIXTURES
      - AMOUNTS OF MIXING WATER TO BE WITHHELD FOR LATER ADDITION AT PROJECT SITE
   B. CONSTRUCTION JOINT LAYOUT

PRODUCTS:

1. OBTAIN EACH TYPE OR CLASS OF CEMENTITIONS MATERIAL OF THE SAME BRAND FROM THE SAME MANUFACTURER'S PLANT, OBTAIN AGGREGATE FROM A SINGLE SOURCE, AND OBTAIN ADMIXTURES FROM A SINGLE MANUFACTURER.
2. PORTLAND CEMENT: ASTM C-150, TYPE II
3. NORMAL WEIGHT AGGREGATE: ASTM C33
4. LIGHT WEIGHT AGGREGATE: ASTM C330.
5. FLY ASH: ASTM C618, CLASS F
6. ADMIXTURES:
   A. AIR ENTRAINMENT: ASTM C260
   B. CHEMICAL ADMIXTURES: ASTM C494
   C. PLASTICIZING ADMIXTURES: ASTM C1017
7. CONCRETE MIXTURES: PREPARE DESIGN MIXTURES FOR EACH TYPE AND STRENGTH OF CONCRETE, PROPORTIONED ON THE BASIS OF LABRATORY TRIAL MIXTURES OR FIELD TEST DATA OR BOTH, ACCORDING TO ACI 301.
   A. PROVIDE CONCRETE MIXTURES THAT MEET THE DURABILITY REQUIREMENTS OF ACI 318, CHAPTER 19, BASED ON EXPOSURE CATEGORIES INDICATED IN TABLE BELOW.
   B. CEMENTITIOUS MATERIAL CONTENT: IN ADDITION TO W/C RATIO INDICATED IN TABLE, PROVIDE CONCRETE WITH MINIMUM CEMENTITIONS MATERIAL CONTENT AS INDICATED IN ACI 301, TABLE 4.2.2.1 FOR SLABS/FLOORS.
   A. LIMIT WEIGHT OF CEMENTITIONS MATERIALS OTHER THAN PORTLAND CEMENT TO THOSE INDICATED IN ACI 301.
   B. USE WATER-REDUCING ADMIXTURES AS REQUIRED FOR PLACEMENT AND WORKABILITY.
   C. SLUMP: 4" ± 1"
      a. WATER REDUCING OR PLASTIZING ADMIXTURES ARE PERMITTED TO INCREASE THE SLUMP TO A MAXIMUM OF 8 INCHES FOR CONCRETE WITH VERIFIED SLUMP OF 2 TO 4 INCHES PRIOR TO ADDING ADMIXTURES.
   D. LIMIT WATER-SOLUBLE, CHLORIDE-ION CONTENT IN HARDENED CONCRETE TO 0.06 PERCENT BY WEIGHT OF CEMENT.

CONCRETE MIXTURES					
LOCATIONS IN STRUCTURE	DESIGN STRENGTH	MAX UNIT WEIGHT	MAX W/C RATIO	TARGET AIR CONTENT	EXPOSURE CATEGORIES
FOOTINGS AND FOUNDATION WALLS	4,000 PSI	145 PCF	0.45	7.5%	F0, S0, W0, C0
SLAB ON GRADE	4,000 PSI	145 PCF	0.45	0.0%	F0, S0, W0, C0

EXECUTION:

1. CONFORM TO ASTM C94 FOR CONCRETE MIXING OPERATIONS.
2. CONFORM TO ACI 306.1 FOR COLD-WEATHER PLACEMENT AND ACI 301 FOR HOT-WEATHER PLACEMENT.
3. PROTECT FRESHLY PLACED CONCRETE FROM PREMATURE DRYING AND EXCESSIVE COLD OR HOT TEMPERATURES. CURE CONCRETE ACCORDING TO ACI 308.1.
4. COMPLY WITH ACI 318 AND ACI 301 FOR DESIGN, INSTALLATION, AND REMOVAL OF SHORING AND RESHORING.
5. PLACE AND SECURE ANCHORAGE DEVICES AND OTHER EMBEDDED ITEMS REQUIRED FOR ADJOINING WORK THAT IS ATTACHED TO OR SUPPORTED BY CAST-IN-PLACE CONCRETE. USE SETTING DRAWINGS, TEMPLATES, ETC. REQUIRED TO POSITION AND SECURE EMBEDDED ITEMS PRIOR TO CONCRETE PLACEMENT.
   A. INSTALL ANCHOR RODS TO ELEVATIONS REQUIRED AND COMPLYING WITH TOLERANCES IN SECTION 7.5 OF AISC 303.
6. INSTALL CONSTRUCTION JOINTS SO STRENGTH AND APPEARANCE OF CONCRETE ARE NOT IMPAIRED, AT LOCATIONS INDICATED OR AS APPROVED BY THE ARCHITECT.
7. OPENINGS, POCKETS, ETC., LARGER THAN 6" SHALL NOT BE PLACED IN CONCRETE SLABS, DECKS, OR WALLS UNLESS SPECIALLY DETAILED ON THE STRUCTURAL DRAWINGS. NOTIFY THE ARCHITECT WHEN DRAWINGS BY OTHERS SHOW OPENINGS, POCKETS, ETC., LARGER THAN 6" NOT SHOWN ON THE STRUCTURAL DRAWINGS.
8. PIPES AND CONDUITS EMBEDDED IN CONCRETE:
   A. PIPES LARGER THAN 1-1/2" DIAMETER SHALL NOT BE EMBEDDED IN STRUCTURAL CONCRETE EXCEPT WHERE SPECIFICALLY APPROVED BY ARCHITECT.
   B. PIPES SHALL NOT DISPLACE OR INTERRUPT REINFORCING BARS.
   C. DO NOT STACK CONDUITS. SPACE EMBEDDED PIPES AND CONDUITS AT A MINIMUM OF AT A MINIMUM OF 3 DIAMETERS CLEAR FROM OTHER EMBEDDED PIPES/CONDUITS AND 1 1/2" CLEAR FROM REINFORCING BARS.
   D. NO CONDUITS SHALL BE PLACED IN CONCRETE FILL OVER METAL DECK.
9. PROVIDE SLEEVES FOR PLUMBING AND ELECTRICAL OPENINGS IN CONCRETE BEFORE PLACING. DO NOT CUT REINFORCING WHICH MAY CONFLICT. CORING IN CONCRETE IS NOT PERMITTED WITHOUT ARCHITECT REVIEW AND APPROVAL.
10. SCREED CONCRETE FILL OVER STEEL DECK TO A CONSTANT THICKNESS AS SPECIFIED IN THE DECKING SCHEDULE. DO NOT EXCEED THE SPECIFIED DECK THICKNESS BY MORE THAN 1/2".
11. PROVIDE 3/4" CHAMFER AT EXTERIOR CONCRETE CORNERS AND EDGES OF PERMANENTLY EXPOSED CONCRETE UNLESS NOTED OTHERWISE.
12. ALL CONCRETE SURFACES AGAINST WHICH NEW CONCRETE IS TO BE PLACED SHALL BE CLEANED AND ROUGHENED TO 1/4" AMPLITUDE.
13. FIELD QUALITY CONTROL:
   A. THE OWNER WILL RETAIN A SPECIAL INSPECTOR AND QUALIFIED TESTING AGENCY TO PERFORM SPECIAL INSPECTIONS AND TESTS AS IDENTIFIED IN THE STATEMENT OF SPECIAL INSPECTION.

NONSHRINK GROUTING:

GENERAL:

1. SUBMITTALS: PRODUCT DATA SHEETS

PRODUCTS:

1. SHRINKAGE-RESISTANT GROUT: ASTM C1107
   A. NONMETALIC TYPE
   B. MINIMUM f'c = 8,000 psi

EXECUTION:

1. COMPLY WITH MANUFACTURER'S WRITTEN INSTALLATION INSTRUCTIONS FOR SHRINKAGE-RESISTANT GROUTS.

DESIGN CRITERIA:

ROOF LIVE LOADS:

ROOF 20 PSF (REDUCIBLE)

ROOF SNOW LOADS: (SECTION 1603.1.3 OF THE CODE):

GROUND SNOW LOAD: P_g = 89.0 PSF

FLAT ROOF SNOW LOAD: P_f = 89.7 PSF

MINIMUM SNOW LOAD: P_m = 20.0 PSF

SNOW EXPOSURE FACTOR: C_e = 1.2

SNOW LOAD IMPORTANCE FACTOR: I_s = 1.0

SLOPE FACTOR: C_S = 1.0

THERMAL FACTOR: C_t = 1.2

WIND DESIGN DATA:

WIND LOADS ARE IN ACCORDANCE WITH SECTION 1609 OF THE CODE.

RISK CATEGORY: II

BASIC WIND SPEED: V = 103 MPH (3-SECOND GUST)

WIND EXPOSURE: B

INTERNAL PRESSURE COEFFICIENT: GC_{pi} = 0.00

COMPONENTS & CLADDING WIND PRESSURES (PSF)				
LOCATION		COMPONENT TRIBUTARY AREA (SQ FT)		
		10	100	500
ROOF	ZONE 1	+16/-25	+16/-16	+16/-16
	ZONE 2	+16/-37	+16/-20	+16/-16
	ZONE 3	+16/-45	+16/-30	+16/-22

EARTHQUAKE DESIGN DATA:

SITE AND OCCUPANCY PARAMETERS	
SEISMIC IMPORTANCE FACTOR	I_e = 1.25
RISK CATEGORY	III
MAPPED SPECTRAL RESPONSE ACCELERATION PARAMETERS	S_S = 0.518
	S_1 = 0.162
SITE CLASS	D
DESIGN SPECTRAL RESPONSE ACCELERATION PARAMETERS	S_{DS} = 0.478
	S_{D1} = 0.246
SEISMIC DESIGN CATEGORY	D

BUILDING PARAMETERS	
SEISMIC FORCE RESISTING SYSTEM	STEEL AND CONCRETE COMPOSITE ORDINARY MOMENT FRAMES
SEISMIC RESPONSE COEFFICIENTS	C_S = 0.199
RESPONSE MODIFICATION FACTOR	R = 3
SYSTEM OVERSTRENGTH FACTOR	Ω_0 = 3
DEFLECTION AMPLIFICATION FACTOR	C_d = 2.5
ANALYSIS PROCEDURE USED	EQUIVALENT LATERAL FORCE
INELASTIC STORY DRIFT	Δ_0 =
DESIGN BASE SHEAR	V = 7.2 KIPS

FOUNDATION:

GEOTECHNICAL INVESTIGATION:

1. GEOTECHNICAL INFORMATION AND FOUNDATION DESIGN IS BASED ON THE MINIMUM PRESUMPTIVE LOAD-BEARING VALUES PER TABLE 1806.2 OF THE CODE.

GEOTECHNICAL DESIGN CRITERIA:

1. SPREAD OR CONTINUOUS FOOTINGS:

ANTICIPATED BEARING MATERIAL	ALLOWABLE BEARING CAPACITY	MINIMUM FROST DEPTH
CLAY, SANDY CLAY, SILTY CLAY, CLAYEY SILT, SILT, OR SANDY SILT	1,500 PSF	36"

FOUNDATION REQUIREMENTS:

1. STRUCTURAL FILL: COMPACT ALL SOIL BELOW FOUNDATIONS AND SLABS-ON-GRADE TO MINIMUM 95% OF OPTIMUM DRY DENSITY PER ASTM D1557.
2. FROST PROTECTION: AT EXTERIOR FOOTINGS, PROVIDE MINIMUM FROST DEPTH INDICATED IN SCHEDULE FROM LOWEST ADJACENT GRADE TO BOTTOM OF FOOTING. VERIFY THAT FOOTING ELEVATIONS AND FINAL GRADES INDICATED WILL PROVIDED THIS MINIMUM DEPTH. NOTIFY ARCHITECT OF ANY LOCATIONS THAT MAY NOT ACHIEVE THIS MINIMUM FROST DEPTH.
3. PROVIDE DE-WATERING OF EXCAVATIONS FROM SURFACE WATER, GROUND WATER AND/OR SEEPAGE.
4. REMOVE ALL ABANDONED FOOTINGS, UTILITIES, ETC. NEW FOOTINGS MUST EXTEND INTO UNDISTURBED SOILS.

GENERAL:

STRUCTURAL DRAWINGS:

1. STRUCTURAL DRAWINGS ARE A PORTION OF THE CONTRACT DOCUMENTS AND ARE INTENDED TO BE USED WITH OTHER DRAWINGS, SPECIFICATIONS, AND DOCUMENTS ENUMERATED IN THE OWNER/CONTRACTOR AGREEMENT.
2. REVIEW AND COORDINATE THE REQUIREMENTS OF THE DRAWINGS AND SPECIFICATIONS PRIOR TO THE START OF CONSTRUCTION. ANY DISCREPANCY IDENTIFIED SHALL BE BROUGHT TO THE ATTENTION OF THE ARCHITECT SO THAT A CLARIFICATION CAN BE ISSUED. ANY WORK PERFORMED IN CONFLICT WITH THE CONTRACT DOCUMENTS SHALL BE CORRECTED BY THE CONTRACTOR AT THEIR OWN EXPENSE.
3. NOTES AND DETAILS ON DRAWINGS SHALL TAKE PRECEDENCE OVER GENERAL NOTES AND TYPICAL DETAILS. WHERE NO DETAILS ARE GIVEN, CONSTRUCTION SHALL BE AS SHOWN FOR SIMILAR WORK.

CODE REQUIREMENTS AND REFERENCED STANDARDS:

1. ALL WORK SHALL CONFORM TO THE MINIMUM STANDARDS OF THE FOLLOWING CODES:

   2018 INTERNATIONAL BUILDING CODE (IBC) AND LATEST REVISIONS REFERRED TO HERE AS "THE CODE", AND ANY OTHER REGULATING AGENCIES WHICH HAVE AUTHORITY OVER ANY PORTION OF THE WORK AND THOSE CODES & STANDARDS LISTED IN THESE NOTES AND SPECIFICATIONS.

2. ASTM SPECIFICATIONS AND REFERENCED STANDARDS ON THE DRAWINGS SHALL BE THE VERSION REFERENCED IN CHAPTER 35 OF THE CODE OR AS REFERENCED IN THE APPLICABLE DESIGN STANDARD.

EXISTING CONDITIONS:

1. VERIFY EXISTING CONDITIONS, DIMENSIONS, AND ELEVATIONS PRIOR TO STARTING CONSTRUCTION. NOTIFY THE ARCHITECT ANY DISCREPANCIES OR INCONSISTENCIES.
2. INVESTIGATE SITE DURING CLEARING AND EARTHWORK OPERATIONS FOR FILLED EXCAVATIONS OR BURIED STRUCTURES, SUCH AS CESSPOOLS, CISTERNS, FOUNDATIONS, ETC. IF ANY SUCH STRUCTURES ARE FOUND, NOTIFY THE ARCHITECT IMMEDIATELY.

TEMPORARY CONDITIONS:

1. THE CONTRACT DRAWINGS REPRESENT THE FINISHED STRUCTURE. THEY DO NOT INDICATE THE METHOD OF CONSTRUCTION. PROVIDE ALL MEASURES NECESSARY TO PROTECT THE STRUCTURE DURING CONSTRUCTION, INCLUDING BRACING, SHORING FOR LOADS DUE TO CONSTRUCTION EQUIPMENT ETC. OBSERVATION VISITS TO THE SITE BY THE STRUCTURAL ENGINEER DO NOT INCLUDE INSPECTION OF THE ABOVE ITEMS.
2. THE CONTRACT STRUCTURAL DRAWINGS SHOW THE BUILDING IN ITS FINAL INTENDED POSITION. MAKE PROVISIONS IN THE CONSTRUCTION SEQUENCING OF THE BUILDING TO TAKE INTO ACCOUNTS SHRINKAGE, CREEP, SHORTENING, THERMAL EXPANSION, ETC.
3. SPREAD OUT CONSTRUCTION MATERIALS IF PLACED ON FRAMED ROOF OR FLOOR. LOAD SHALL NOT EXCEED THE DESIGN LIVE LOAD PER SQUARE FOOT.

OTHER DRAWINGS:

1. SEE ARCHITECTURAL DRAWINGS FOR THE FOLLOWING:
   A. SIZE AND LOCATION OF ALL DOOR AND WINDOW OPENINGS, EXCEPT AS NOTED
   B. SIZE AND LOCATION OF ALL INTERIOR AND EXTERIOR NON-BEARING PARTITIONS UNLESS NOTED AND/OR DETAILED ON THE STRUCTURAL DRAWINGS
   C. SIZE AND LOCATION OF ALL CONCRETE CURBS, EQUIPMENT PADS, PITS, FLOOR DRAINS, SLOPES, DEPRESSED AREAS, CHANGES IN LEVEL, CHAMFERS, GROOVES, INSERTS, ETC
   D. SIZE AND LOCATION OF ALL FLOOR AND ROOF OPENINGS EXCEPT AS SHOWN
   E. FLOOR AND ROOF FINISHES
   F. MISCELLANEOUS DRAINAGE AND WATERPROOFING
   G. ALL FIREPROOFING REQUIREMENTS INCLUDING FIREPROOFING OF STRUCTURAL STEEL
   H. DIMENSIONS NOT SHOWN ON STRUCTURAL DRAWINGS

TESTING, INSPECTIONS, AND OBSERVATIONS

STRUCTURAL OBSERVATIONS:

1. KPFF WILL PERFORM STRUCTURAL OBSERVATION BASED ON THE REQUIREMENTS OF CHAPTER 17 OF THE CODE AT THE STAGES OF CONSTRUCTION LISTED BELOW. CONTRACTOR SHALL NOTIFY ARCHITECT AND PROVIDE ACCESS FOR KPFF TO PERFORM THESE OBSERVATIONS.
2. KPFF WILL ISSUE AN OBSERVATION REPORT TO ARCHITECT FOR DISTRIBUTION TO THE OWNER AND CONTRACTOR. OBSERVATION REPORT WILL IDENTIFY WORK OBSERVED AND ANY WORK NOT IN CONFORMANCE WITH CONTRACT DOCUMENTS.
3. STRUCTURAL OBSERVATION IS TO VERIFY GENERAL CONFORMANCE WITH THE STRUCTURAL DRAWINGS. STRUCTURAL OBSERVATIONS DO NOT REPLACE THE NEED FOR SPECIAL INSPECTION AS REQUIRED BY CHAPTER 17 OF THE CODE.

STRUCTURAL OBSERVATIONS	
ITEM	TIMING/FREQUENCY OF OBSERVATION
A. FOUNDATIONS	PRIOR TO FIRST CONCRETE PLACEMENT, AFTER REINFORCING IS INSTALLED AND TIED.
B. STEEL FRAME	AFTER COMPLETION OF STEEL FRAMING

SPECIAL INSPECTION AND TESTING:

1. SPECIAL INSPECTION WILL BE PROVIDED BY A THIRD-PARTY TESTING AGENCY, RETAINED BY THE OWNER TO VERIFY COMPLIANCE WITH ITEMS SUMMERIZED IN THE STATEMENT OF SPECIAL INSPECTION.
2. CONTRACTOR SHALL PROVIDE SUFFICIENT NOTICE AND ACCESS FOR THE SPECIAL INSPECTOR TO PERFORM THESE INSPECTIONS.

PROFESSIONAL ENGINEER REGISTERED 12038 STATE OF IDAHO JOSEPH M. WILLIAMS

kpff
412 E. Park Center Blvd.
Suite 200
Boise, ID 83706
O: 208.336.6985
www.kpff.com

HUMMEL ARCHITECTS
205 N. 10th Street Suite 300 Boise, Idaho 83702 208.343.7523
482 Constitution Way, Suite 111 Idaho Falls, ID 83402 208.343.7523
hummelarch.com

Project:
JOHNSON CREEK CARETAKERS BUILDING SNOW ROOF
2085 Johnson Creek Rd
Cascade, ID 83611

Sheet:
GENERAL STRUCTURAL NOTES

Revisions:

CONSTRUCTION DOCUMENT

Project No:	10212200126
Drawn By:	H. WONG
Checked By:	J. PARKS
Date:	12/2/2022

Sheet No: S0.01

12/2/2022 2:51:30 PM

STRUCTURAL STEEL:

GENERAL:

1. DETAIL, FABRICATE, AND ERECT STRUCTURAL STEEL IN ACCORDANCE WITH THE FOLLOWING PROVISIONS:
   - A. AISC 303 - "CODE OF STANDARD PRACTICE FOR STEEL BUILDINGS AND BRIDGES"
   - B. AISC 360 - "SPECIFICATIONS FOR STRUCTURAL STEEL BUILDINGS"
   - C. AISC 341 - "SEISMIC PROVISIONS FOR STRUCTURAL STEEL BUILDINGS" FOR MEMBERS OF THE SEISMIC FORCE RESISTING SYSTEM (SFRS)
   - D. RCSC's - "SPECIFICATIONS FOR STRUCTURAL JOINTS USING HIGH STRENGTH BOLTS"
2. COMPLY WITH THE FOLLOWING PROVISIONS FOR ALL WELDED JOINTS:
   - A. AWS D1.1 - "STRUCTURAL STEEL WELDING CODE"
   - B. AWS D1.8 - "SEISMIC SUPPLEMENT" FOR CONNECTIONS OF THE SEISMIC FORCE RESISTING SYSTEM (SFRS)
3. QUALIFICATIONS:
   - A. FABRICATOR QUALIFICATIONS: A QUALIFIED FABRICATOR THAT PARTICIPATES IN AISC QUALITY CERTIFICATIONS PROGRAM AND IS DESIGNATED AN AISC CERTIFIED PLANT, CATEGORY BU.
   - B. ERECTOR QUALIFICATIONS: A QUALIFIED INSTALLER WHO PARTICIPATES IN THE AISC QUALITY CERTIFICATION PROGRAM AND IS DESIGNATED AN AISC CERTIFIED ERECTOR, CATEGORY CSE.
4. SUBMITTALS:
   - A. STEEL SHOP DRAWINGS: INCLUDE THE FOLLOWING:
     - DETAILS OF CUTS, CONNECTIONS, SPLICES, CAMBER, HOLES, AND OTHER PERTINENT DATA.
     - EMBEDMENT DRAWINGS.
     - INDICATE WELDS BY STANDARD AWS SYMBOLS, DISTINGUISHING BETWEEN SHOP AND FIELD WELDS. SHOW SIZE, LENGTH, AND TYPE OF EACH WELD. SHOW BACKING BARS THAT ARE TO BE REMOVED AND SUPPLEMENTAL FILLET WELDS WHERE BACKING BARS ARE TO REMAIN.
     - INDICATE TYPES, SIZE, AND LENGTH OF BOLTS, DISTINGUISHING BETWEEN SHOP AND FIELD BOLTS. IDENTIFY PRETENSIONED AND SLIP-CRITICAL, HIGH STRENGTH BOLTED CONNECTIONS.
     - IDENTIFY MEMBERS AND CONNECTIONS OF THE SEISMIC-FORCE-RESISTING-SYSTEM (SFRS).
5. WELD LENGTHS CALLED FOR ON PLANS ARE THE NET EFFECTIVE LENGTH REQUIRED. WHERE FILLET WELD SYMBOL IS GIVEN WITHOUT INDICATION OF SIZE, USE MINIMUM SIZE WELDS AS SPECIFIED IN AISC 360 SECTION J2.2b.

PRODUCTS:

1. ALL STRUCTURAL STEEL SHALL CONFORM TO THE ASTM DESIGNATION AS INDICATED BELOW (UNO):

TYPE	ASTM SPECIFICATION
W SHAPES AND WT SHAPES	A992 OR A913, GR 50 (S75)
ANGLES & CHANNELS	A36
PLATES & BARS	A36 A572, GR 50 (WHERE INDICATED)
HSS SECTIONS	A500 GR B A1085 (WHERE INDICATED)
HIGH STRENGTH BOLTS (AS INDICATED IN DETAILS)	A325 OR F1582 (TWIST-OFF TYPE) A490 OR F2280 (TWIST-OFF TYPE)
ANCHOR RODS	F1554 GR 55 F1554 GR 36/105 (WHERE INDICATED)
COMMON/MACHINE BOLTS	A307, GR A

2. WELDING ELECTRODES: E70XX ELECTRODES, COMPLYING WITH AWS REQUIREMENTS AND MEETING THE FOLLOWING MINIMUM CHARPY V-NOTCH REQUIREMENTS:
   - A. ALL WELDS: 20 FT-LB @ 0° F.
   - B. DEMAND CRITICAL WELDS: 40 FT-LB @ 70° F.
3. HOT-DIP GALVANIZED FINISH: APPLY ZINC COATING BY THE HOT-DIP PROCESS TO STRUCTURAL STEEL ACCORDING TO ASTM A123.

EXECUTION:

1. ALL STRUCTURAL STEEL SURFACES THAT ARE ENCASED IN CONCRETE, MASONRY, SPRAY ON FIREPROOFING, OR ARE ENCASED BY BUILDING FINISH, SHALL BE LEFT UNPAINTED EXCEPT AS REQUIRED FOR DESIGNATION OF PROTECTED ZONES.
2. DO NOT CUT OR DAMAGE EXISTING REINFORCEMENT. PRIOR TO FABRICATING PLATES, MEMBERS, OR OTHER STEEL ASSEMBLIES ATTACHED TO REINFORCED CONCRETE/MASONRY USING POST-INSTALLED ANCHORS, LOCATE ALL REINFORCEMENT AND CONFIRM CONSTRUCTABILTY OF ANCHOR LOCATIONS. SHOULD CONFLICTS WITH REINFORCEMENT OCCUR, SUBMIT ALTERNATE ANCHOR LOCATIONS AND REVISED STEEL FABRICATIONS TO ARCHITECT FOR REVIEW AND APPROVAL.
3. HOT DIP GALVANIZE STRUCTURAL STEEL AND MISCELLANEOUS METAL EXPOSED TO THE WEATHER AFTER FABRICATION, UNLESS CALLED OUT TO BE PAINTED ON THE CONSTRUCTION DOCUMENTS. PROTECT FIELD WELDS EXPOSED TO THE WEATHER VIA PRIME AND PAINT OR BRUSH / COLD GALVANIZING. REFER TO ARCH DRAWINGS FOR STEEL FINISH.
4. QUALIFY WELDERS AND PROCEDURES PER AWS D1.1. ALL WELDED JOINTS SHALL BE PREQUALIFIED PER AWS OR QUALIFIED BY TESTING PER AWS.
5. BACKUP BARS MAY REMAIN IN PLACE UNLESS NOTED IN DRAWINGS, OR WHEN ULTRASONIC TESTING INDICATES A POSSIBLE WELD DEFECT. IF DEFECTS ARE INDICATED BACKUP BAR IS TO BE REMOVED AND THE ROOT INSPECTED. IF IMPERFECTIONS ARE FOUND, THEY ARE TO BE REMOVED AND REPAIRED PER AWS STANDARDS.
6. DISCONTINUITIES IN WELDS CREATED BY ERRORS OR BY FABRICATION OR ERECTION OPERATIONS, SUCH AS TACK WELDS, ERECTION AIDS, AIR ARC GOUGING AND FLAME CUTTING SHALL BE REPAIRED.
7. TESTS AND INSPECTIONS:
   - A. QUALITY ASSURANCE (QA): AS REQUIRED BY CHAPTER 17 OF THE CODE AND AISC 360, CHAPTER N, THE OWNER WILL RETAIN A QUALITY ASSURANCE INSPECTOR TO PERFORM SPECIAL INSPECTIONS AND TESTS AS IDENTIFIED IN THE STATEMENT OF SPECIAL INSPECTION.
   - B. QUALITY CONTROL (QC): THE FABRICATOR AND ERECTOR SHALL PROVIDE QUALITY CONTROL INSPECTIONS AS REQUIRED BY AISC 360, CHAPTER N AND AISC 341, CHAPTER J.

REINFORCING STEEL:

GENERAL:

1. DETAIL, FABRICATE, AND INSTALL REINFORCING IN ACCORDANCE WITH THE REQUIREMENTS OF ACI 301, ACI 117, AND THE "CRSI MANUAL OF STANDARD PRACTICE."
2. WELDER QUALIFICATIONS: QUALIFY PROCEDURES AND PEROSONNEL ACCORDING TO AWS D1.4
3. SUBMITTALS:
   - A. REINFORCEMENT SHOP DRAWINGS
   - B. MATERIAL CERTIFICATES FOR REINFORCING STEEL

PRODUCTS:

1. REINFORCING STEEL: ASTM A615, GRADE 60, DEFORMED
2. WELDED WIRE REINFORCEMENT (WWR): ASTM A1064
3. WELDING OF OF REINFORCING STEEL:
   - A. LOW HYDROGEN ELECTRODE FROM AWS D1.4, TABLE 5.1.
   - B. REINFORCING BARS TO BE WELDED: CONFORM TO THE REQUIREMENTS OF ASTM A706. WHERE REINFORCEMENT COMPLYING WITH ASTM A615 IS TO BE WELDED, PERFORM CHEMICAL TESTS TO DETERMINE WELDABILITY IN ACCORDANCE WITH AWS D1.4.
4. MECHANICAL COUPLING DEVICES: CONFORM TO ACI 318, 18.2.7.1 AND TESTED ACCORDING TO ICC-ES ACCEPTANCE CRITERIA FOR MECHANICAL CONNECTOR SYSTEMS FOR STEEL REINFORCING BARS (AC133).
   - A. TYPE 1: PROVIDE IN LOCATIONS THAT DO NOT REQUIRE TYPE 2 AS NOTED BELOW
   - B. TYPE 2: PROVIDE WHERE MECHANICAL SPLICES ARE SPECIFIED IN IN CONCRETE MOMENT FRAMES, SHEARWALLS, CONCRETE DIAPHRAGMS, AND WHERE INDICATED IN THE DRAWINGS.
   - C. WHERE NOT SPECIFICALLY INDICATED ON THE DRAWINGS, MECHANICAL DEVICES IS SUBJECT TO APPROVAL OF THE ARCHITECT.
5. HEADED DEFORMED BARS: ASTM A970, CLASS HA.

EXECUTION:

1. DELIVER, STORE, AND HANDLE STEEL REINFORCEMENT TO PREVENT BENDING AND DAMAGE.
2. CLEAN REINFORCEMENT OF LOOSE RUST AND MILL SCALE, EARTH, ICE, GREASE, AND OTHER FOREIGN MATERIAL THAT REDUCE BOND TO CONCRETE.
3. ACCURATELY POSITION, SUPPORT, AND SECURE REINFORCEMENT AGAINST DISPLACEMENT. LOCATE AND SUPPORT REINFORCEMENT WITH BAR SUPPORTS TO MAINTAIN MINIMUM CONCRETE COVER. DO NOT TACK WELD CROSSING REINFORCING BARS.
4. MARK REINFORCING BARS SO THEIR IDENTIFICATION CAN BE MADE WHEN THE FINAL IN-PLACE INSPECTION IS MADE. CLEARLY MARK ALL REINFORCING CONFORMING TO DIFFERING ASTM SPECIFICATIONS AND/OR OF DIFFERING GRADES TO DIFFERENTIATE THEM FROM OTHER REINFORCING STEEL IF CONCURRENTLY PRESENT ON SITE.
5. INSTALL MECHANICAL COUPLING DEVICES AND HEADED DEFORMED BARS ACCORDING TO MANUFACTURER'S WRITTEN INSTRUCTIONS AND CODE EVALUATION REPORT.
6. FIELD QUALITY CONTROL:
   - A. THE OWNER WILL RETAIN A SPECIAL INSPECTOR AND QUALIFIED TESTING AGENCY TO PERFORM SPECIAL INSPECTIONS AND TESTS AS IDENTIFIED IN THE STATEMENT OF SPECIAL INSPECTION.
7. PROVIDE THE MINIMUM CONCRETE COVER FOR REINFORCEMENT IN CAST-IN-PLACE CONCRETE (NON-PRESTRESSED) AS INDICATED IN THE TABLE BELOW.

MINIMUM CONCRETE CLEAR COVER		
LOCATION	BAR SIZE	CLEAR COVER
CONCRETE CAST AGAINST AND PERMANENTLY EXPOSED TO EARTH	ALL	3"
CONCRETE EXPOSED TO EARTH OR WEATHER	#6 & LARGER	2"
	#5 & SMALLER	1 1/2"
SLABS, WALLS, OR JOISTS NOT EXPOSED TO WEATHER OR IN CONTACT WITH THE GROUND	#14 & LARGER	1 1/2"
	#11 & SMALLER	3/4"
BEAM AND COLUMN TIES & STIRRUPS NOT EXPOSED TO WEATHER OR IN CONTACT WITH GROUND	ALL	1 1/2"

PROFESSIONAL ENGINEER REGISTRATION 12033 STATE OF IDAHO JORDEN M. WILLIAMS

kpff
412 E. Park Center Blvd.
Suite 200
Boise, ID 83706
O: 208.336.6985
www.kpff.com

HUMMEL ARCHITECTS
205 N. 10th Street
Suite 300
Boise, Idaho 83702
208.343.7523
482 Constitution Way,
Suite 111
Idaho Falls, ID 83402
208.343.7523
hummelarch.com

Project:
JOHNSON CREEK
CARETAKERS BUILDING
SNOW ROOF
2085 Johnson Creek Rd
Cascade, ID 83611

Sheet:
GENERAL STRUCTURAL NOTES

Revisions:

CONSTRUCTION DOCUMENT

Project No:	10212200126
Drawn By:	H. WONG
Checked By:	J. PARKS
Date:	12/2/2022

Sheet No:
S0.02

12/2/2022 2:51:35 PM

GENERAL PLAN NOTES:

G1 REFERENCE DRAWINGS:

S0.0X - GENERAL STRUCTURAL NOTES
S1.0X - LOAD MAPS
S2.01 - FOUNDATION PLAN
S3.01 - TRUSS ELEVATIONS
S4.01 - CONCRETE DETAILS
S5.01 - STEEL DETAILS

G2 SEE SHEET S0.00 FOR TYPICAL SYMBOLS

G3 ELEVATION 100'-0" = 100.00' FT PER ARCH

FOUNDATION PLAN NOTES:

F1 TOP OF SLAB-ON-GRADE SHALL BE AS INDICATED ON PLAN

F2 ALL UTILITIES THAT CROSS FOUNDATIONS SHALL BE RE-ROUTED

F3 FX.X (X'-X") INDICATES FOOTING TYPE PER SCHEDULE AND TOP OF FOOTING ELEVATION.

F4 INDICATES STEEL HSS COLUMN ABOVE.

S5 S———S INDICATES STEP IN CONTINOUS FOOTING PER 3/S4.01

FOOTING SCHEDULE

TYPE MARK	DIMENSIONS			REINFORCING	TYPE COMMENTS
	LENGTH	WIDTH	DEPTH		
F4.0	4'-0"	4'-0"	1'-6"	(6) #5 EW	6/S4.01
F5.0	5'-0"	5'-0"	1'-6"	(6) #6 EW	6/S4.01

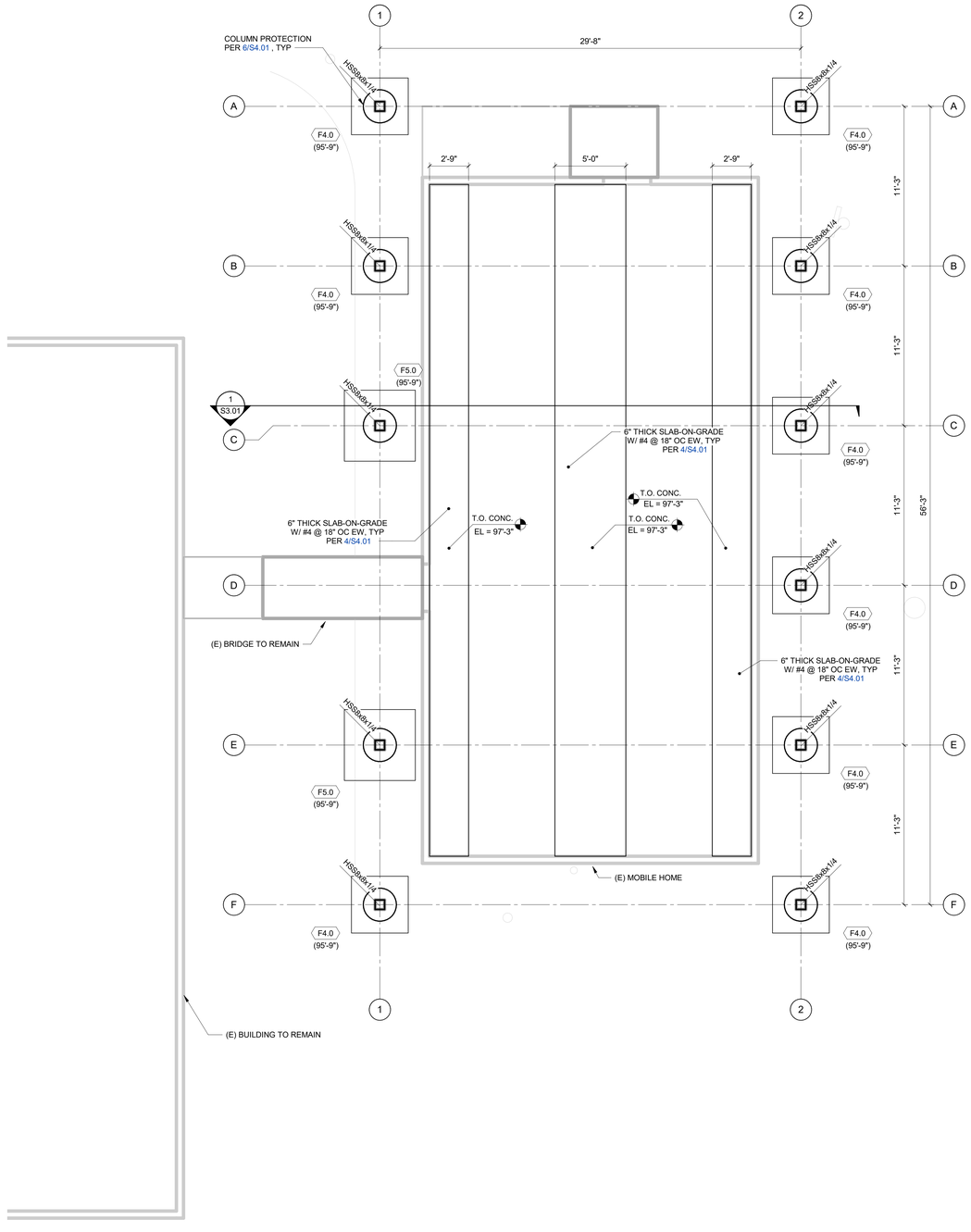

2 S2.01 FOUNDATION PLAN
1/4" = 1'-0"

PLAN NORTH

CONSTRUCTION DOCUMENT

kpff
412 E. Park Center Blvd.
Suite 200
Boise, ID 83706
O: 208.336.6985
www.kpff.com

HUMMEL ARCHITECTS
205 N. 10th Street
Suite 300
Boise, Idaho 83702
208.343.7523
482 Constitution Way,
Suite 111
Idaho Falls, ID 83402
208.343.7523
hummelarch.com

Project:
JOHNSON CREEK
CARETAKERS BUILDING
SNOW ROOF
2085 Johnson Creek Rd
Cascade, ID 83611

Sheet:
FOUNDATION PLAN

Revisions:

Project No:	10212200126
Drawn By:	H. WONG
Checked By:	J. PARKS
Date:	12/2/2022

Sheet No:
S2.01

12/2/2022 2:51:52 PM

GENERAL PLAN NOTES:

G1 REFERENCE DRAWINGS:

S0.0X - GENERAL STRUCTURAL NOTES
S1.0X - LOAD MAPS
S2.01 - FOUNDATION PLAN
S3.01 - TRUSS ELEVATIONS
S4.01 - CONCRETE DETAILS
S5.01 - STEEL DETAILS

G2 SEE SHEET S0.00 FOR TYPICAL SYMBOLS

G3 ELEVATION 100'-0" = 100.00' FT PER ARCH

STEEL FRAMING PLAN NOTES:

S1 ALL BEAMS SHALL BE EQUALLY SPACED BETWEEN COLUMNS UNLESS NOTED OTHERWISE

S2 24 GA STANDING SEAM METAL ROOF PER ARCH. METAL DECK CONNECTIONS PER MANUFACTURER. ORIENT DECK FLUTES AS INDICATED.

S3 "LFRS" INDICATES THAT THE MEMBER IS PART OF THE LARERAL FORCE RESISTING SYSTEM. SEE GENERAL NOTES FOR MORE INFORMATION.

S4 INDICATES STEEL HSS COLUMN BELOW.

S5 (-X") INDICATES BEAM DEPRESSION BELOW BOTTOM OF DECK ELEVATION

S6 ALL STEEL TO BE PAINTED WITH ZINC RICH CORROSION RESISTANT PAINT PER ARCH. CONTRACTOR SHALL SUBMIT PRODUCT DATA TO ARCHITECT AND ENGINEER FOR REVIEW AND APPROVAL.

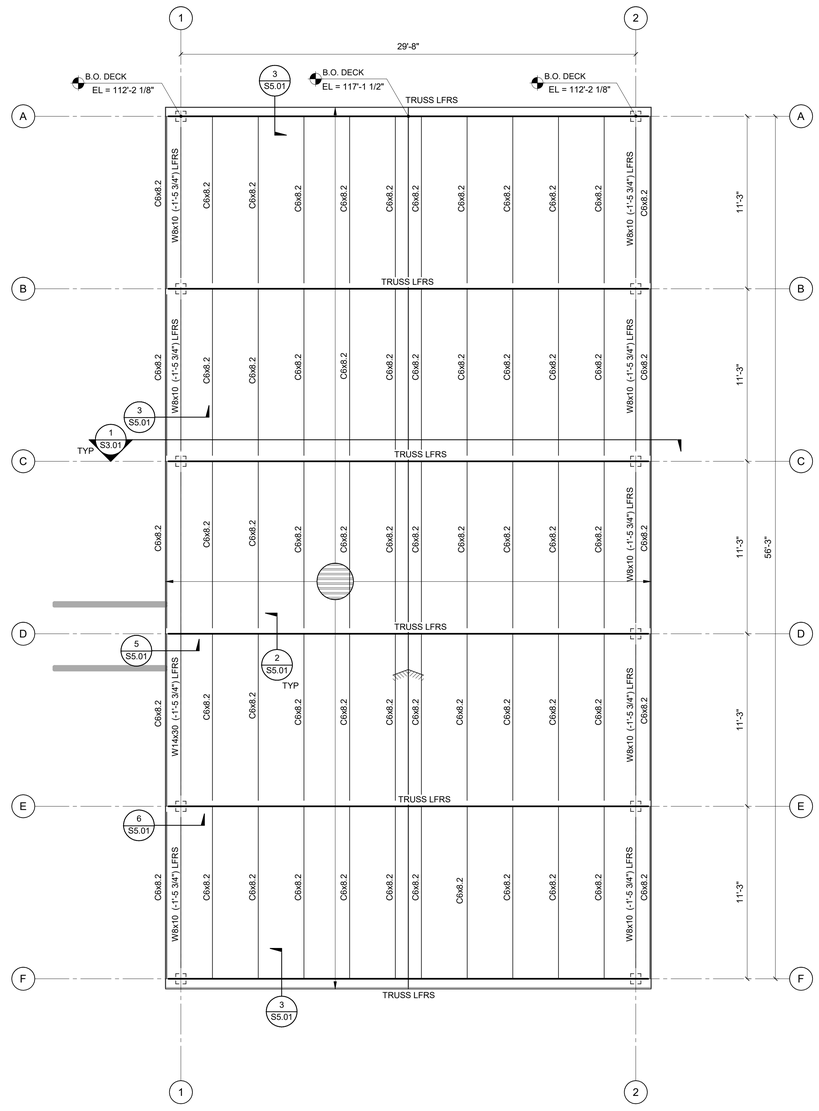

1 S2.02 ROOF FRAMING PLAN
1/4" = 1'-0"

PLAN NORTH

CONSTRUCTION DOCUMENT

PROFESSIONAL ENGINEER REGISTERED 12033 STATE OF IDAHO JOSEPH M. WILLIAMS

kpff
412 E. Park Center Blvd.
Suite 200
Boise, ID 83706
O: 208.336.6985
www.kpff.com

HUMMEL ARCHITECTS
205 N. 10th Street
Suite 300
Boise, Idaho 83702
208.343.7523
482 Constitution Way,
Suite 111
Idaho Falls, ID 83402
208.343.7523
hummelarch.com

Project:
JOHNSON CREEK
CARETAKERS BUILDING
SNOW ROOF
2085 Johnson Creek Rd
Cascade, ID 83611

Sheet:
ROOF FRAMING PLAN

Revisions:

Project No:	10212200126
Drawn By:	H. WONG
Checked By:	J. PARKS
Date:	12/2/2022

Sheet No:
S2.02

12/2/2022 2:51:55 PM

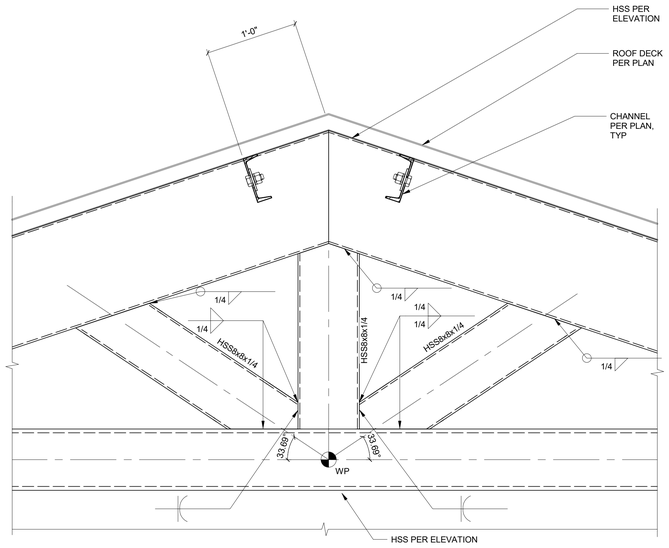

2 S3.01 TRUSS RIDGE DETAIL

1 1/2" = 1'-0"

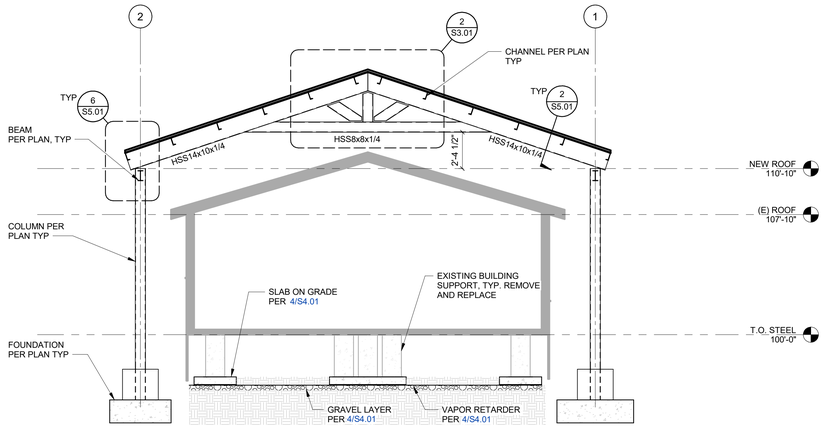

1 S3.01 TRUSS ELEVATION

1/4" = 1'-0"

kpff
412 E. Park Center Blvd.
Suite 200
Boise, ID 83706
O: 208.336.6985
www.kpff.com

HUMMEL ARCHITECTS
205 N. 10th Street
Suite 300
Boise, Idaho 83702
208.343.7523
482 Constitution Way,
Suite 111
Idaho Falls, ID 83402
208.343.7523
hummelarch.com

Project:
JOHNSON CREEK
CARETAKERS BUILDING
SNOW ROOF
2085 Johnson Creek Rd
Cascade, ID 83611

Sheet:
TRUSS ELEVATIONS

Revisions:

CONSTRUCTION DOCUMENT

Project No:	10212200126
Drawn By:	H. WONG
Checked By:	J. PARKS
Date:	12/2/2022

Sheet No:
S3.01

12/2/2022 2:51:58 PM

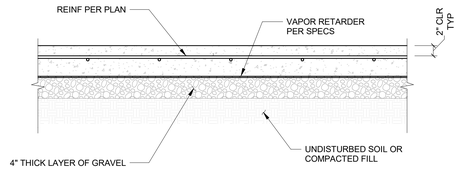

NOTES:

1. DO NOT TO PUNCTURE VAPOR RETARDER UNLESS AN APPROVED REPAIR OF THE VAPOR RETARDER IS PERFORMED PER THE MANUFACTURERS REQUIREMENTS.
2. VAPOR RETARDER TO TERMINATE AT EDGE OF BELOW GRADE FOOTINGS AND PITS.
3. VAPOR RETARDER MAY BE OMITTED AT EXTERIOR LOCATIONS WHERE APPROVED BY ARCH.
4. REFER TO GEOTECH REPORT AND PROJECT SPECIFICATIONS FOR SUBGRADE PREPARATION REQUIREMENTS.

4 / S4.01 SLAB ON GRADE

NO SCALE

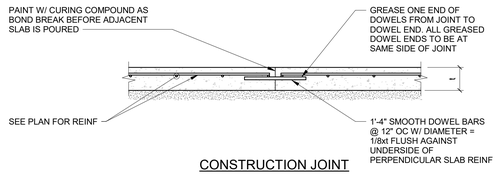

CONSTRUCTION JOINT

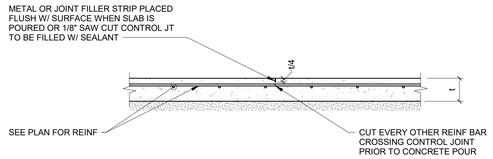

CONTROL JOINT

NOTES:

1. REFER TO PLAN FOR SLAB THICKNESS AND REINFORCING.
2. CONTROL JOINTS TO BE SPACED @ 20'-0" OC MAX, EACH WAY, UNLESS NOTED OTHERWISE. RATIO OF DISTANCE BETWEEN CONTROL JOINTS IN EACH DIRECTION FOR A SLAB PANEL SHALL NOT EXCEED 1.5. CONSTRUCTION JOINTS PER THIS DETAIL SHALL BE CONSIDERED AS CONTROL JOINTS FOR CONTROL JOINT SPACING REQUIREMENTS.

5 / S4.01 TYP SOG CONTROL & CONSTRUCTION JOINTS

NO SCALE

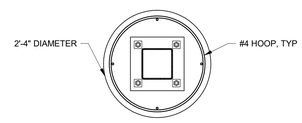

PLAN

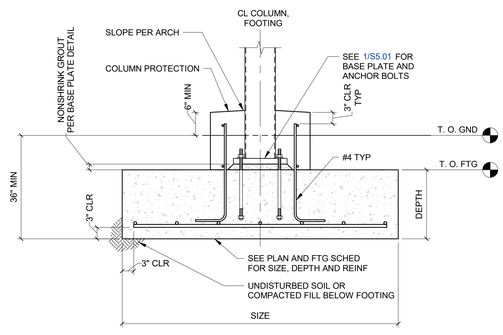

6 / S4.01 TYP STEEL COLUMN FOOTING

NO SCALE

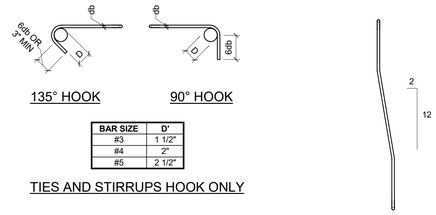

135° HOOK 90° HOOK

BAR SIZE	D'
#3	1 1/2"
#4	2"
#5	2 1/2"

TIES AND STIRRUPS HOOK ONLY

TYPICAL COLUMN BAR OFFSET

BAR SIZE	D
#3 THRU #8	6d
#9 THRU #11	8d
#14 THRU #18	10d

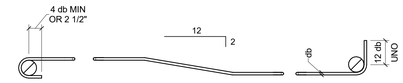

180° HOOK 90° HOOK

STANDARD HOOKS

1 / S4.01 REINFORCING BAR BENDING DETAIL

NO SCALE

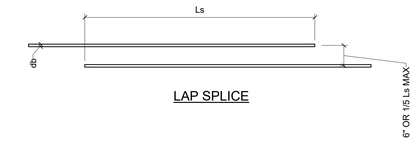

LAP SPLICE

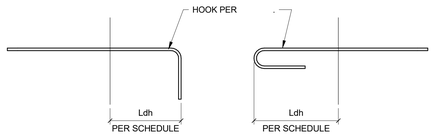

90 DEG HOOK 180 DEG HOOK

HOOKED BAR DEVELOPMENT LENGTH

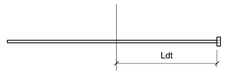

HEADED BAR DEVELOPMENT LENGTH

BAR SIZE	TOP BARS		OTHERS BARS		L_{dh}	L_{dt}
	L_d	L_s	L_d	L_s		
#4	25"	32"	19"	25"	9"	8"
#5	31"	40"	24"	31"	12"	10"
#6	37"	48"	28"	37"	14"	12"
#7	54"	70"	42"	54"	17"	14"
#8	62"	80"	47"	62"	19"	16"
#9	70"	90"	54"	70"	21"	18"
#10	78"	102"	60"	78"	24"	20"
#11	87"	113"	67"	87"	27"	22"

NOTES:

1. DEVELOPMENT LENGTHS ARE FOR 4 ksi CONCRETE
2. USE THE LENGTHS IN THIS SCHEDULE, UNLESS NOTED OTHERWISE.
3. A TOP BAR IS A HORIZONTAL BAR WITH MORE THAN 12" OF FRESH CONCRETE CAST BELOW IT.

ABBREVIATIONS

d_b = BAR DIAMETER
L_d = DEVELOPMENT LENGTH
L_s = CLASS B LAP SPLICE LENGTH
L_{dh} = HOOKED BAR DEVELOPMENT LENGTH
L_{dt} = TERMINATOR DEVELOPMENT LENGTH

2 / S4.01 DEVELOPMENT AND SPLICE LENGTH

NO SCALE

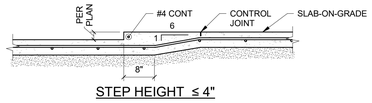

STEP HEIGHT ≤ 4"

3 / S4.01 TYP SLAB-ON-GRADE STEP

NO SCALE

kpff
412 E. Park Center Blvd.
Suite 200
Boise, ID 83706
O: 208.336.6985
www.kpff.com

HUMMEL ARCHITECTS
205 N. 10th Street
Suite 300
Boise, Idaho 83702
208.343.7523
482 Constitution Way,
Suite 111
Idaho Falls, ID 83402
208.343.7523
hummelarch.com

PROFESSIONAL ENGINEER REGISTERED 12033 STATE OF IDAHO ANDREW M. WILLIAMS

Project:
JOHNSON CREEK CARETAKERS BUILDING SNOW ROOF
2085 Johnson Creek Rd
Cascade, ID 83611

Sheet:
CONCRETE DETAILS

CONSTRUCTION DOCUMENT

Revisions:

Project No:	10212200126
Drawn By:	H. WONG
Checked By:	J. PARKS
Date:	12/2/2022

Sheet No:
S4.01

12/2/2022 2:52:01 PM

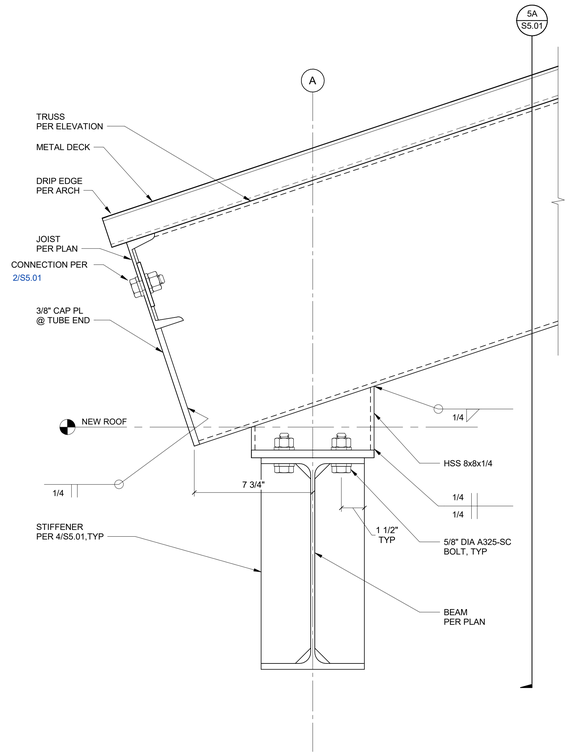

CONNECTION NOTES:

1. BOLTS IN CONNECTION SHALL BE SLIP CRITICAL BOLTS WITH CLASS-A FAYING SURFACE.
2. CONNECTION PLATES TO HAVE AISC SHORT SLOTTED HOLES.

5 S5.01 TRUSS TO GIRDER CONNECTION

NO SCALE

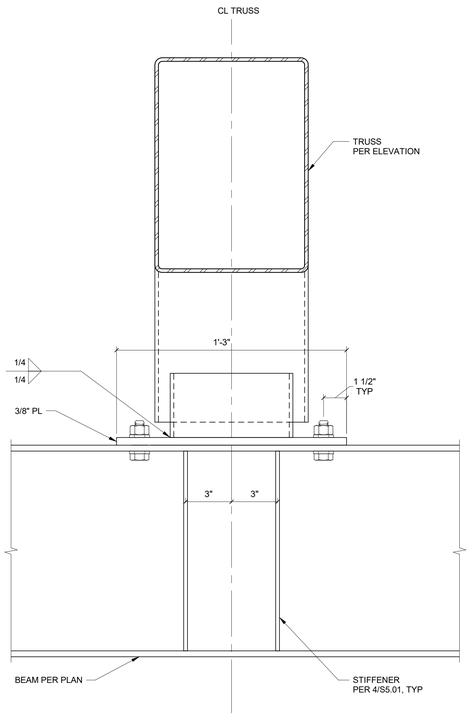

5A

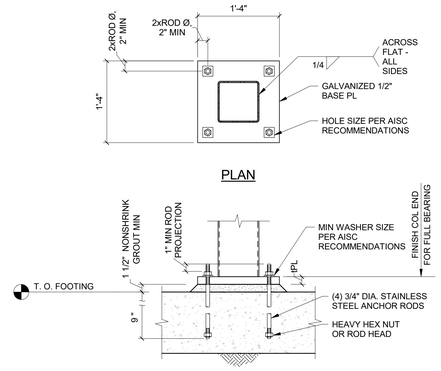

1 S5.01 HSS COLUMN BASE PLATE

NO SCALE

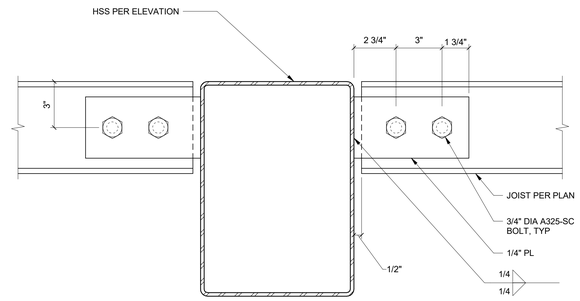

CONNECTION NOTES:

1. BOLTS IN CONNECTION SHALL BE SLIP CRITICAL BOLTS WITH CLASS-A FAYING SURFACE.
2. CONNECTION PLATES TO HAVE AISC SHORT SLOTTED HOLES.

2 S5.01 TYPICAL JOIST TO TRUSS CONNECTION

NO SCALE

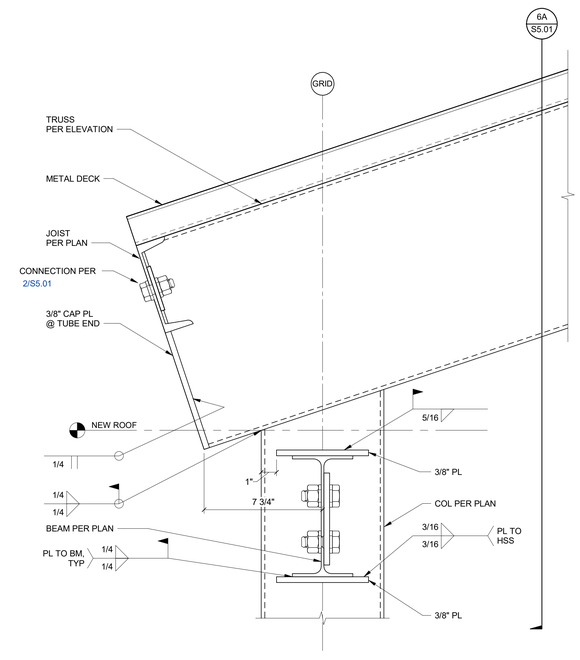

CONNECTION NOTES:

1. CONNECTION PLATES TO HAVE AISC SHORT SLOTTED HOLES.

6 S5.01 TRUSS TO COLUMN CONNECTION

NO SCALE

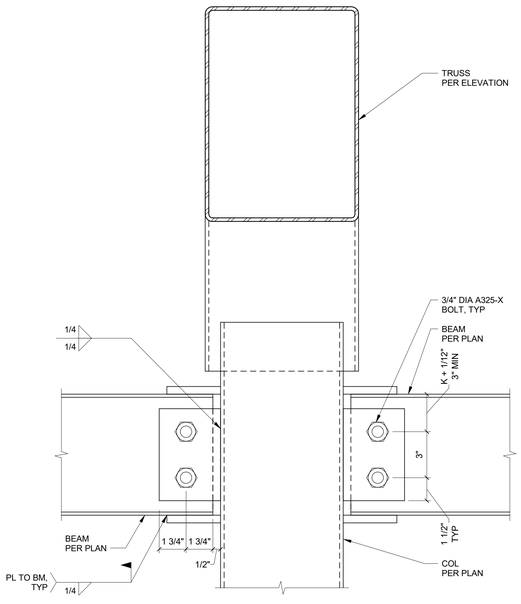

6A SECTION

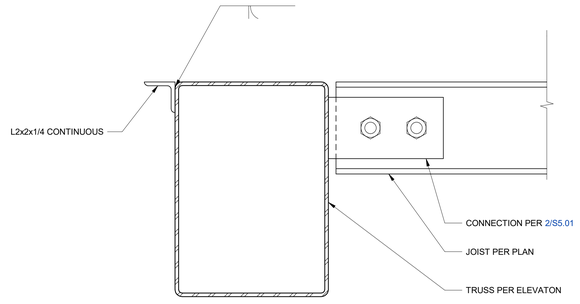

3 S5.01 EDGE OF DECK SUPORT

NO SCALE

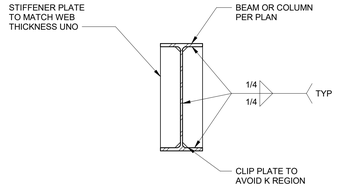

4 S5.01 TYPICAL STIFFENER PLATES

1" = 1'-0"

412 E. Park Center Blvd.
Suite 200
Boise, ID 83706
O: 208.336.6985
www.kpff.com

HUMMEL ARCHITECTS
205 N. 10th Street
Suite 300
Boise, Idaho 83702
208.343.7523
482 Constitution Way,
Suite 111
Idaho Falls, ID 83402
208.343.7523
hummelarch.com

Project:
JOHNSON CREEK
CARETAKERS BUILDING
SNOW ROOF
2085 Johnson Creek Rd
Cascade, ID 83611

Sheet:
STEEL DETAILS

Revisions:

CONSTRUCTION DOCUMENT

Project No:	10212200126
Drawn By:	H. WONG
Checked By:	J. PARKS
Date:	12/2/2022

Sheet No:
S5.01

12/2/2022 2:52:04 PM