IDAHO TRANSPORTATION DEPARTMENT

REQUEST FOR PROPOSALS

FOR

PROJECT DEVELOPMENT SERVICES

FY24 STRATEGIC MANAGEMENT – SLIDE STUDY
US-95, MP 210

Key No. 22822

June 2, 2023

REQUEST FOR PROPOSALS

Table of Contents

- General Information
- Preparation Instructions
- Evaluation Criteria
- Scope of Work

The following items are not included in this package, but can be located at the following web site:

http://itd.idaho.gov/business/?target=consultant-agreements

- General Information and Requirements
- Sample Agreement and Consultant Agreement Specifications
- Federal Per Diem Rates
- Certification Regarding Debarment, Suspension, and Other Responsibility Matters form
- Consultant DBE Commitment form (ITD-2398)

GENERAL INFORMATION

PROPOSAL

The Idaho Transportation Department (ITD) is seeking qualified and experienced respondents from interested firms to submit a proposal for providing Project Development services for the FY24 STRATEGIC MANAGEMENT – SLIDE STUDY, US-95, MP 210 project.

GENERAL TERMS

This Request for Proposals (RFP) does not commit ITD to enter into an agreement or to pay any costs incurred in the preparation of a proposal or in subsequent negotiations.

REVISIONS TO RFP

All addenda to this solicitation will be posted on the Consultant Services web page. No notice will be given by mail.

RESERVATION OF RIGHTS BY ITD

The issuance of this RFP does not constitute an assurance by ITD that any contract will actually be entered into by ITD, and expressly reserves the right to:

- Waive any immaterial defect or informality in any response or response procedure
- Reject any and all proposals
- Reissue the Request for Proposals
- Invite additional respondents to the proposal
- Request additional information and data from any or all respondents
- Extend the date for submission of responses
- Supplement, amend, or otherwise modify the RFP, and cancel this request with or without the substitution of another RFP
- Disqualify any respondent who fails to provide information or data requested herein or who provides inaccurate or misleading information or data
- Disqualify any respondent on the basis of any real or apparent conflict of interest

By responding to this proposal, each respondent agrees that any finding by ITD of any fact in dispute as to this proposal or the responses thereto shall be final and conclusive, except as provided herein.

CONFLICT OF INTEREST

By the submission of a proposal, the Consultant agrees to ensure that, at the time of contracting, the Consultant will have no interest, direct or indirect, that would conflict in any manner or degree with the performance of the Consultant's obligations under the Agreement. The Consultant shall further covenant that, in the performance of the contract, the Consultant shall not employ any person, or subcontract with any entity, having any such known interest.

EEO REQUIREMENTS

Respondent, by submission of a proposal, agrees to not discriminate against any worker, employee, application subcontractor or any member of the public because of race, color, gender, age, national origin, or disability, or otherwise commit an unfair employment practice. Respondent further agrees to comply with all Federal, State, and Local equal employment opportunity requirements and the requirements of the ITD EEO Special Provisions, accessible at the following web site: http://apps.itd.idaho.gov/apps/ocr/index.aspx.

All firms working for the Department area required to register on the Bidder's List with the Office of Civil Rights. If your firm has not registered, go to the following website for instructions: https://itd.dbesystem.com/. Please make sure your subconsultants are also registered. For further information regarding this requirement, call the ITD EEO Office at (208) 334-8884.

DBE PARTICIPATION REQUIREMENTS

In an effort to achieve ITD's DBE Annual Participation Goal (APG) of 10% utilization, ITD requires responder to utilize certified subconsultants and suppliers listed on its DBE Directory located at: https://itd.dbesystem.com/. For this project, the Consultant must propose a minimum of 1.5% DBE utilization or demonstrate "Good Faith Effort" toward achieving that goal.

Use Consultant DBE Commitment form (ITD-2398) to show all DBE firms, their specific work task or services, and their utilization percentage. The ITD-2398 is located on the Consultant Services web page at http://itd.idaho.gov/business/?target=consultant-agreements.

If the proposal does not show a minimum DBE utilization of 1.5% or it is determined that it does not show a good faith effort toward achieving that goal, the proposal will be considered non-responsive and will not be accepted.

If the proposal is ranked number one, and the firm is awarded the project, the DBE commitment for the contract will be the total DBE percentage identified by the Consultant on the ITD-2398.

For more information regarding ITD's DBE Program, please contact ITD Office of Civil Rights at civilrights@itd.idaho.gov or call the ITD DBE Coordinator at (208) 334-8567.

FINANCIAL REQUIREMENTS

Prior to negotiating an agreement, the selected consultant and their subconsultants will be required to submit certified hourly rates and their last years' financial information and overhead schedule in accordance with the Federal Acquisition Regulations (FARs) and the ITD Overhead Rate Policy. The Overhead Rate Policy can be viewed at the following web site: http://itd.idaho.gov/business/?target=consultant-agreements.

PROPRIETARY MATERIAL

ITD assumes no liability for disclosure of proprietary material submitted by respondents. Proposal submittals shall be considered public documents under applicable state law except to the extent portions of the submittals are otherwise protected under applicable law.

CERTIFICATION REGARDING DEBARMENT

All proposals must contain a signed Certification Regarding Debarment, Suspension, and other Responsibility Matters form for the prime and each subconsultant.

The certification form is located on the Consultant Services web page at http://itd.idaho.gov/business/?target=consultant-agreements.

PROPOSAL EVALUATION AND SELECTION

An Evaluation Committee will evaluate and determine the individual and comparative merits of each of the proposals received. It is the responsibility of the Consultant to ensure that it complies with this RFP and provides the information requested. If the Consultant fails to provide any information requested in this RFP, such failure may result in either a lowered evaluation score of the proposal or disqualification of the proposal.

It is the intent of the department to take approximately fifteen days, commencing on the submission date shown below, to evaluate the submitted proposals. The department intends to notify the successful and unsuccessful Consultants as soon as practicable after the evaluations have been completed, and after approval has been given on the Evaluation Committee's recommendations.

As part of the selection process, the top-ranked firms may be required, at their expense, to give a presentation and/or answer interview questions.

If your firm is selected and approved, negotiations will begin. If negotiations break down with a selected Consultant, they will be formally ended and negotiations will begin with the next ranked Consultant.

CONTRACT TYPE AND METHOD OF PAYMENT

The contract for this work will be a professional services agreement. It is anticipated that the method of payment will be Specific Rates of Compensation.

CONTACT INFORMATION

All questions concerning the procedures of this request for proposal shall be directed to Andrea Aliev at ITD via email at Andrea.Aliev@itd.idaho.gov.

All project specific questions shall be directed by e-mail to Jole Wells at Jole.Wells@itd.idaho.gov. No questions will be accepted by telephone. All questions will be responded to by e-mail, within two days of receipt of the question(s).

Interested firms are encouraged to submit a contact e-mail address to Mr. Wells with a request to be included on an electronic mailing list. Firms on the mailing list will receive copies of the response to all project questions submitted. No firms will be identified in the responses. No project specific questions will be accepted after June 23, 2023.

PREPARATION INSTRUCTIONS

Proposals must conform to the following instructions. Any non-conforming proposal will be rejected.

Proposals must be received by ITD by 4:00 p.m. MDT on June 30, 2023. Proposals must be submitted via e-mail with the project name and the consultant's name clearly indicated in the subject line. Late proposals will not be considered.

E-Mail Address for proposal submittal is: consultantadminunit@itd.idaho.gov

FORMAT:

- Required File Format: pdf
- Maximum length of the submittal shall be five (5) pages.
- Cover pages are discouraged. If they are included, they will be counted in the proposal page total.
- The introductory letter is limited to one (1) page.
- Except as otherwise noted, pages shall be portrait oriented, 8 ½ x 11 inches, with minimum of ½" margins and a minimum font size of 11.

- The following items do not count in the proposal page total.
    - Introductory letter
    - Critical Path Diagram
    - Certification Regarding Debarment

INTRODUCTORY LETTER

The introductory letter should be addressed to:

Andrea Aliev
Contracts Officer
Consultant Services
Idaho Transportation Department
P.O. Box 7129
Boise, Idaho 83707-1129

The introductory letter should introduce the Consultant, identify the Project Manager, and list a contact telephone number, and contain a statement confirming the commitment of the key personnel identified in the submittal to meet ITD's quality and schedule expectations. The Consultant shall include his/her acceptance of the terms and provisions of the Sample Agreement located at http://itd.idaho.gov/business/?target=consultant-agreements, and indicate willingness to execute said agreement.

PROPOSAL

It is essential that the consultant provide an adequate staff of experienced personnel or subconsultants capable of and devoted to the successful accomplishment of work to be performed under this contract. The specific individuals or subconsultants listed in the proposal, including Project Manager, shall be assigned to the key positions and shall not be removed or replaced without the prior written approval of ITD. Replacement personnel submitted for approval must have at least equal qualifications, experience and expertise as those listed in the proposal.

The following criteria will be considered in the evaluation and selection, and apply only to the Consultant, except where specifically requested for the Consultant and each Subconsultant. The weights listed will be applied to the scoring for each criteria.

CRITERIA 1: COMPANY EXPERIENCE AND QUALIFICATIONS
Weight - 2 *(Complete for Consultant and each Subconsultant)*

- Describe how the company is organized and uniquely qualified to develop this type of project.
- Provide descriptions of no more than three (3) similar projects successfully developed by the Consultant identifying the similarities to this project. Federal-aid projects successfully developed by the consultant should be included if available.
- List three (3) verifiable professional services references with a contact person and phone number.

CRITERIA 2: PROJECT MANAGER
Weight - 2

- Identify the Project Manager who will be responsible for the quality and timeliness of the consultant's and ITD's work, and for ensuring that adequate consultant personnel and other resources are available for this project.
- Provide a brief summary of education, experience, and qualifications pertaining to the management of this project. The Project Manager needs to have experience coordinating projects with complex geotechnical, environmental, and logistical challenges and demonstrate the ability to communicate effectively with teams with diverse subject matter expertise.
- Provide descriptions of no more than three (3) similar projects successfully developed by the Project Manager, identifying the similarities to this project. Federal-aid projects successfully developed by the project manager should be included if available. Include dates and specific services provided.
- Provide Idaho professional registration (registration is required at the time of submittal).

- List three (3) verifiable professional services references with a contact person and phone number.
- List all projects that the Project Manager is currently managing and the percent of time spent by him/her on each of those projects. Include estimated completion date for each of those projects. Identify availability.

CRITERIA 3: KEY PERSONNEL & RESOURCES AVAILABLE
Weight - 3 *(Complete for Consultant and each Subconsultant)*

- Identify the key personnel and describe each person's role and duties on this project.
- Provide a brief summary of related experience and qualifications and the experience that the team of personnel have working together. Include experience and qualifications working on Federal-aid projects.
- Provide Idaho professional registration (if applicable) for each person identified.
- List all projects that the Key Personnel are currently assigned to and the percent of time spent by him/her on each of those projects. Include estimated completion date for each of those projects. Identify availability.
- Include an organization chart of the key personnel with their roles and office locations.

CRITERIA 4: PROJECT UNDERSTANDING
Weight - 4

- Provide a written narrative demonstrating knowledge, methodology, policies and procedures to accomplish this federally funded highway project as outlined in the General Scope of Work.
- Identify the significant features and potential issues that may be encountered and possible steps to eliminate or minimize those issues.
- Include a Critical Path Diagram based on major tasks and project milestones. The sheet size for the Critical Path Diagram shall be 11" x 17".

CRITERIA 5: QUALITY CONTROL
Weight - 1 *(Complete for Consultant and each Subconsultant)*

Describe the Consultant's procedures for scope change control, schedule and cost control and quality control. This should also include a description of the Consultant's control measures regarding their Subconsultants' project related work.

GENERAL SCOPE OF WORK

DESCRIPTION

A 0.5 mile section of US-95 is at risk by a constriction between the slide at mile point 210.4 and the Salmon River. From 1997 to 2005, several mass movements have closed the highway requiring mitigation efforts. The latest being an alignment shifted as far as allowable toward the river. Since the last mass movement, the slide movement has been a slow creep that has gradually consumed a 30 ft catchment leaving little room for continued movement.

SCOPE OF WORK

ITD is seeking proposals for alternatives analysis and conceptual designs for slide stabilization through the constriction.

The scope of work is as follows:

- Conduct Geotechnical investigation, analysis, and design to ITD Materials Manual guidelines and parameters. Investigation is to be limited to the active slide. For adjacent slopes and back slopes that are determined to be a hazard to the roadway, conduct a geologic reconnaissance sufficient to estimate their stability and hazard. The conceptual designs are for permanent stabilization of the slide with factors of safety specified in ITD Materials Manual. Provide all feasible alternative designs with costs for slope stabilization including US-95 realignment options meeting a 75mph design speed.
- Provide ITD with technical reports, analyses, and documentation needed to complete the 23 CFR Part 667 analysis on US-95, MP 210 Slide.

HISTORY

No geotechnical investigation of the slide has been conducted. Investigations have been limited to those needed for a barrier fence and MSE wall. In 1997, Terracon drafted a geologic reconnaissance report recommending the excavation of unstable material and installation of a barrier fence which was completed in 1999. In 2005 after the latest mass movement, scaling was performed and Parsons Brinckerhoff proposed several permanent remedial measures with cost estimates. In 2006, personnel from four consulting firms were teamed up for a two-day concept workshop. At this time, ITD obtained drilling estimates for an in-house subsurface investigation and for a consultant subsurface investigation. Because of the cost of an investigation, it was decided to follow the workshop's recommendation for an avoidance realignment, which was completed in 2008. In 2007, several lidar surveys for deformation monitoring were conducted and three slope inclinometers were installed between the roadway and the slide. Since that time, the slide has slowly consumed the 30 ft catchment created in 2008.

PROPOSED WORK TASK SCOPE

- Subsurface investigation, alternative analysis, materials report, conceptual designs, and estimates.
- Environmental alternative analysis
- Survey
- Traffic Control
- Final report

WORK BY OTHERS

The following major work activities will be completed by ITD.

- Provide historical reports, memos, data, photos, and historical surveys.
- ITD District 2 currently has a draft evaluation for the MP 210 Slide *Periodic Evaluation of NHS Facilities Repeatedly Requiring Repairs and Reconstruction Due to Emergency Events (23 CRF Part 667)*, referred to as "Twice Damaged Assets". ITD has determined that this slide study is required to complete the Twice Damaged Asset Evaluation for the MP 210 Slide. ITD will complete this evaluation using technical reports, analyses, and documentation provided by the consultant.

REFERENCE FILE

See attached Reference File.

PROJECT SCHEDULE

July 1, 2023 to July 1, 2026 – This project is assumed to last 2-3 years to allow for long range monitoring of the slide movements.

Idaho Transportation Department
23 CFR Part 667

Periodic Evaluation of Facilities Repeatedly Requiring
Repair and Reconstruction Due to Emergency Events
September 2022

Introduction

Title 23, Code of Federal Regulations (CFR) Part 667 requires the Idaho Transportation Department (Department) to identify and conduct statewide evaluations to determine if there are reasonable alternatives to National Highway System (NHS) roads, highways, and bridges that have required repair and reconstruction activities on two or more occasions due to emergency events.

In addition, the Department must also prepare an evaluation that conforms to Part 667 for all other roads, highways, and bridges (non-NHS) in the state prior to including any project affecting the facility in the Statewide Transportation Improvement Program (STIP). As explained in the regulations, the "evaluations for other roads, highways and bridges are required only when there is some reasonable likelihood work will be performed on those facilities."

As required by 23 CFR 515.9(d)(6) the results of the evaluations will be incorporated into the Department's Transportation Asset Management Plan (TAMP). The evaluation will also be made available to FHWA upon request. Additionally, the evaluations will be used by the Department to review the Transportation Improvement Plans (TIPs) developed by the state's Metropolitan Planning Organizations (MPOs).

The Department will also update the evaluations after every emergency event, as well as on a regular 4-year cycle (23 CFR 667.7(a)). As explained in the regulations, updates after an emergency event are for the purpose of adding newly qualifying roads, highways, or bridges or modifying information on facilities already in the evaluation.

If no emergency event (as defined in the rule) occurs during the evaluation period, the Department's evaluation will simply state that fact and indicate the evaluations cover the same roads, highways, and bridges as the previous evaluation.

Draft

District 2 Twice Damaged Assets

US-95 MP 210 Slide

Table 1. Emergency Twice Damaged Events

HWY	EMERGENCY EVENT	DAMAGE YEAR	ROUTE ID	KEY NUMBER	PROJECT NUMBER	BMP-EMP	REPAIR WORK PERFORMED
US 95	Slide	1997	01540AUS095	KN07082	4110(122) 4110(125)	210.35-210.65	Rockfall Protection Fence and concrete guardrail
US 95	Landslide	2005	01540AUS095	KN10446	A101(446)	210-211	Rock Slope Scaling, permanent rockfall protection fence

Prior to 1997, when slide material came down at MP 210, ITD's District 2 Operations removed the materials from the roadway and ditch to keep the highway open.

In 1997, a slide occurred outside of Riggins, ID approximately between MP 210.35-210.65. In 1998, a short-term diversion road was constructed away from the slide under the US-95 Paving Diversion Slide Repair N. of Riggins ER-4110(125) project. In 1999 the US-95, Slide Repair North of Riggins ER-4110(120) project removed approximately 220,000 cubic yards of slide material and reconstructed US-95 with a 30' flat ditch, concrete guardrail, and rockfall fencing between the hillside and the new alignment.

1999 US-95, Slide Repair North of Riggins

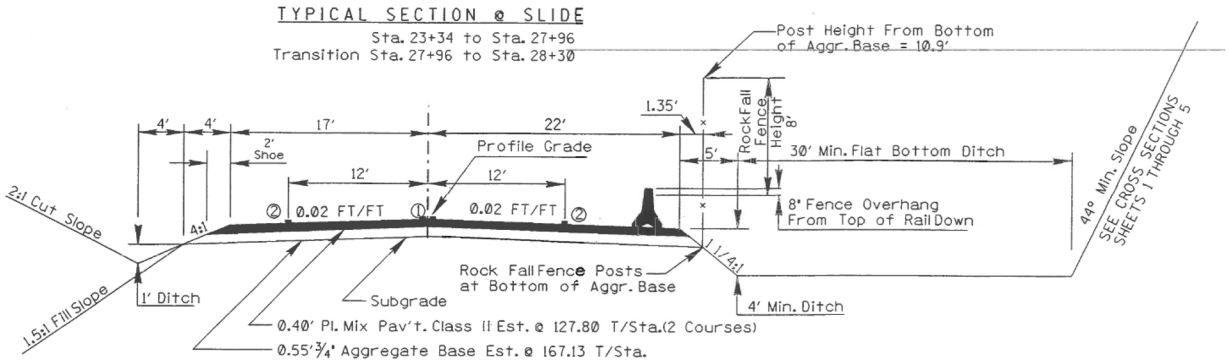

In 2005, a second slide occurred at MP 210. The 2005 slide filled the catchment area and filled the rock fencing. In response, ITD brought together a group of 30 experts consisting of ITD subject matter experts and consultant experts. The group met in Riggins, Idaho, toured the site, and hiked to the top of the slide using a pioneered excavator road previous constructed to get to the top of the hillside. The experts were split up into A, B, C, and D Team groups. The group of experts worked together and completed an

Draft

Alternative Analysis which is provided in Appendix 2. The groups' decision was to go with the C Team's #5 Avoidance with Protection C option which proposed to move the new road further away from the slide utilizing a MSE wall near the river and created a large catchment area.

In 2008 the A010(446) US-95, MP 210 Slide Repair was constructed following the Avoidance with Protection Alternative that was previously selected.

2008 US-95, MP 210 Slide Repair

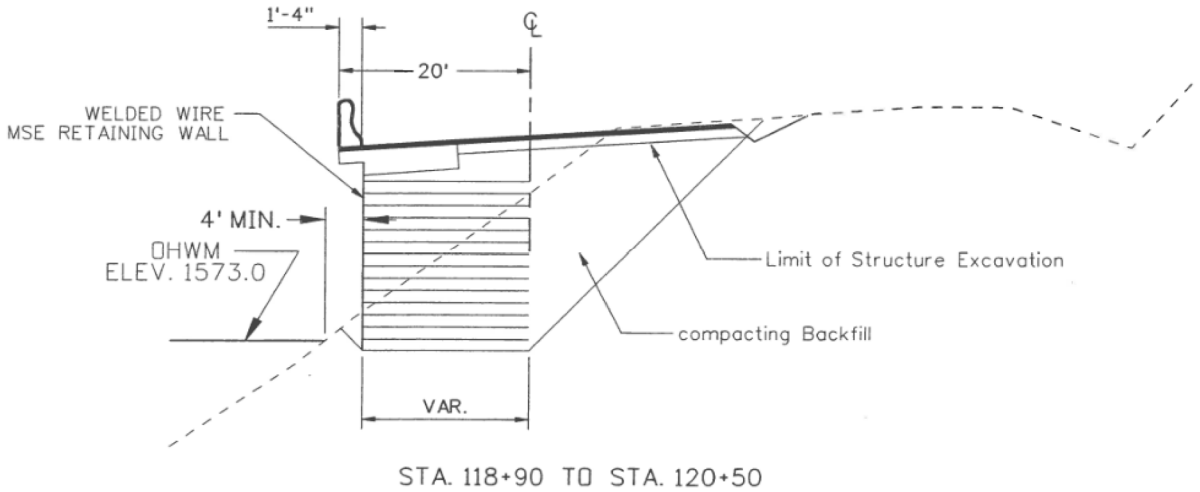

Geologist Site Inspection Q&A

By Brian Bannan, September 9, 2022

Is the slide active?

The slide is active. There is no monitoring of the slide. Movement has been recorded in photographs. The 40 ft wide ditch establish in 2009 has since nearly filled. The movement has been a slow creep. The last mass movement in 2005 has partially self-stabilized by flattening the slope and adding mass at the toe.

Are there active rocks falling?

There is rockfall but it does not currently affect the road. The primary hazard is a rockslide not rockfall. The toe of the slide, adjacent to the road, is over steep producing rockfall as the slide slowly advances. The rockfall is stopped by what little catchment ditch remains and a rockfall barrier. The largest volume of rockfall occurs at the top of the slide originating from the 70 ft vertical head scarp. This head scarp is 600 linear ft from the road. This rockfall stops on the slide mass before it gets near the road. The exception is the concrete foundations from a decommissioned barrier fence above the slide. As the head scarp erodes, several of the foundations (4 ft long, 2 ft diameter cylinders) have come down and nearly reached the road. The remaining foundations could do the same.

Draft

Could we see another Slide at MP 210 in the future?
Yes, the slide is actively moving indicating a factor of safety near 1.0. It would not take much of a change to accelerate the movement. An increase in precipitation or rapid snowmelt are examples. The head scarp is near 70 ft vertical. The scarp is over steep for the rock type and is producing sluffing masses that are retained on the slide surface. This head scarp could fail in mass, rapidly loading the slide below causing it to accelerate.

Are there current mitigations efforts that could be done to prevent a future slide?
The only apparent mitigations would be at the toe. These options (buttressing and retaining) would be expensive because of the large slide mass. It would be made much more expensive if work below the Salmon River high water was not permitted. Avoidance would require structures, river work and purchase of residences. Slope work does not appear possible. The head scarp rock does not appear competent enough to bolt. Excavation was previously unsuccessful.

Any additional comments you have regarding the MP 210 Slide?
Since the 2009 realignment, the slide has crept 40 ft nearly taking up all the gained width from the realignment. At the current rate, the slide can be expected to directly impact the roadway in the near future even without an accelerated event. Maintaining the ditch by excavation as the slide advances will not buy any time. Excavating and steepening the already over steep (40 degrees) slope will produce slumps and rockfall while excavating and will be hazardous to the operators. Any width potentially gained from excavation would be quickly lost.

Alternatives Analysis
District 2 plans to complete a new slide study to develop alternatives and conceptual designs.

Appendixes
Appendix I - US-95, MP 210 Slide Exhibits provides planning grade visualizations of the slide from different views.

Appendix II - US-95, MP 210 Slide Alternative Analysis shows the mitigation alternatives that were developed and considered in 2006.

Draft

Appendix I - US-95, MP 210 Slide Exhibits

Approximate Slide Area

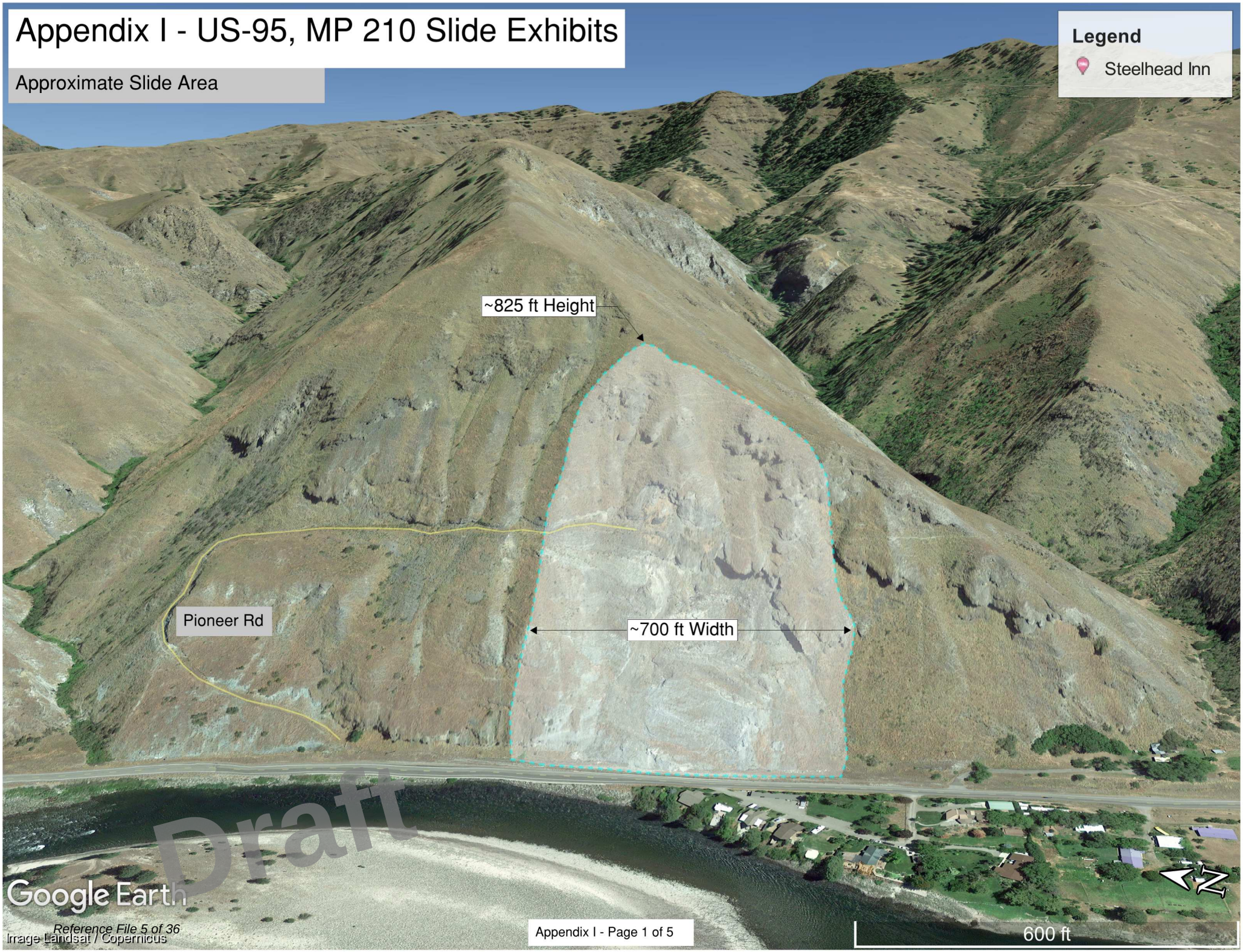

Approximate Slide Area
Satellite View
Legend
Steelhead Inn
Elevation ~1,600 ft
Roadway
Elevation ~2,425 ft
Top of Slide Area
t
Draft
Google Earth
N
900 ft

Looking east at MP 210 Slide from the RV Park approach.

Draft

Looking south at MP 210 Slide from US-95. The 1999 fence is visible and delineates the 1999 alignment.

Draft

Looking north at MP 210 Slide from US-95.

Draft

Appendix II - US-95, MP 210 Slide Alternative Analysis (2006)

STRUCTURE OPTIONS

MSE Wall (Elevated)
Elevated Roadway
Rock Shed
Wall System (Inside Ditch) at Grade – RCC or MSE? (Tied Back)

DECISIONS/OPTIONS

Realign to West Side
Realign to East Edge
Low vs. High Maintenance
Minimize Existing Material
Structure on Alignment
Rock Fall Mitigation

GEO INV – SLIDE

Horizontal Boring – Maybe Later?

Vertical Inclinometer 5 w/Piezo's
- Lower 1/3 of Slide 100' from Road Elevation – 13 +20'
- Lower 2/3 of Slide 175'
- Top of Slide 250'
- N & S sides of Slide 175'

- Geo Physical – Seismic Refraction
- Cobol Imaging
- Acoustic Log

ROADWAY

Boring -3 - STA w/ others
L Middle w/Incl and Piezo
- 50' – 60' Deep

Draft

BRAIN STORMING

- Do Nothing
- Reinforcement
- Removal – 1
- Protection – 9
- Avoidance – 7

PARKING LOT

- Purchase RV Park
- West Side Right-of-Way
- ENV/EIS
- Costs
- Hydraulic Studies
- RCC - $90/CYD

ACTION ITEMS

- GEO Investigation
- Map of Slope/Reconstruction
- Lidar Survey
- Alignment Studies
- Records Research
- Instrumentation
- Scaling?/Enhance Catchment
- Scouring Review
- Bathymetry Survey

Draft

STRUCTURE ON WEST SIDE

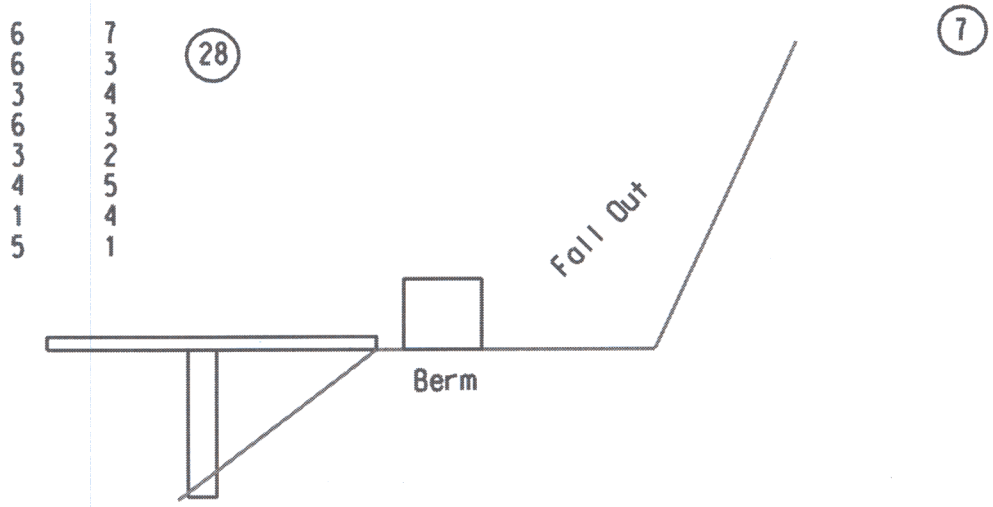

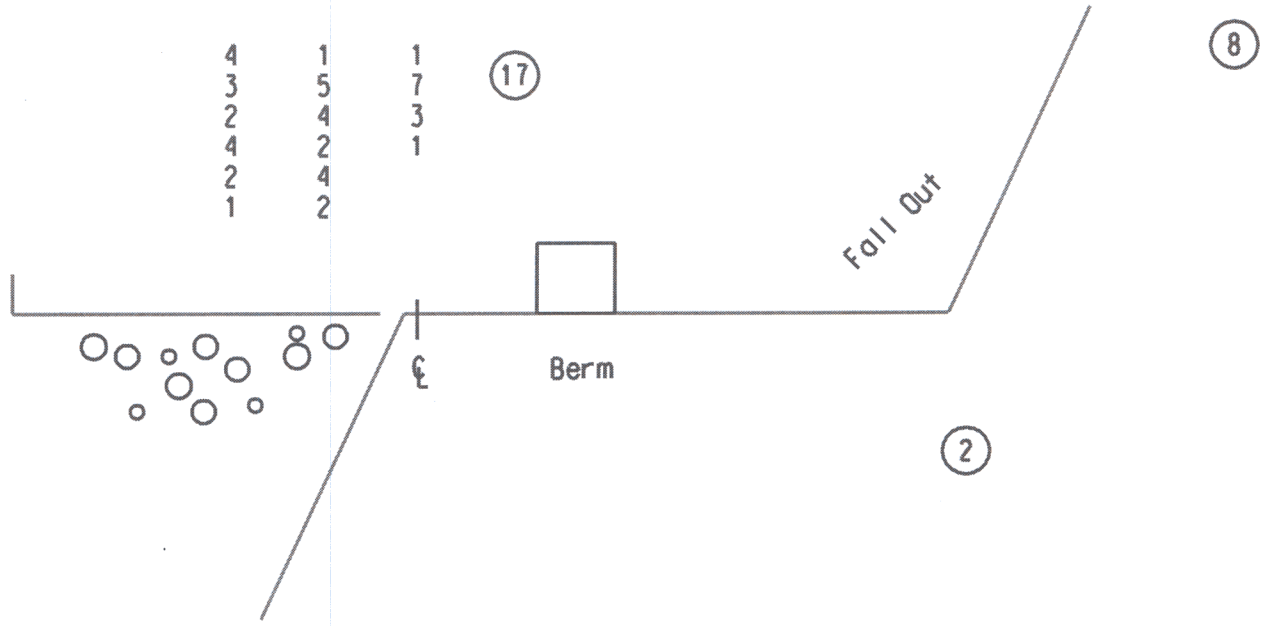

Draft

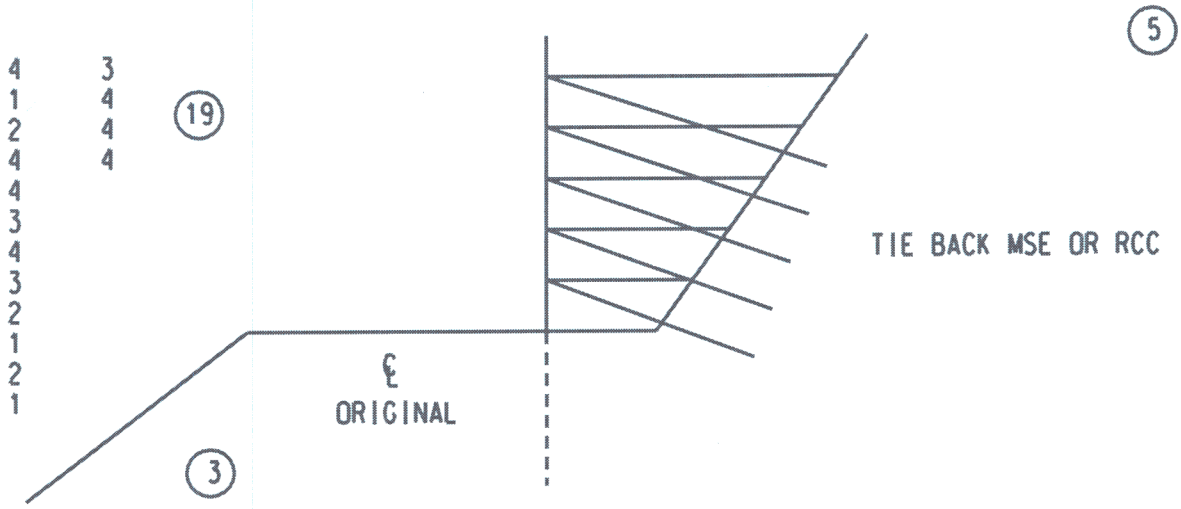
5
4 3
1 4
2 4
4 4
4
3
4
3
2
1
2
1
19
TIE BACK MSE OR RCC
℄
ORIGINAL
3

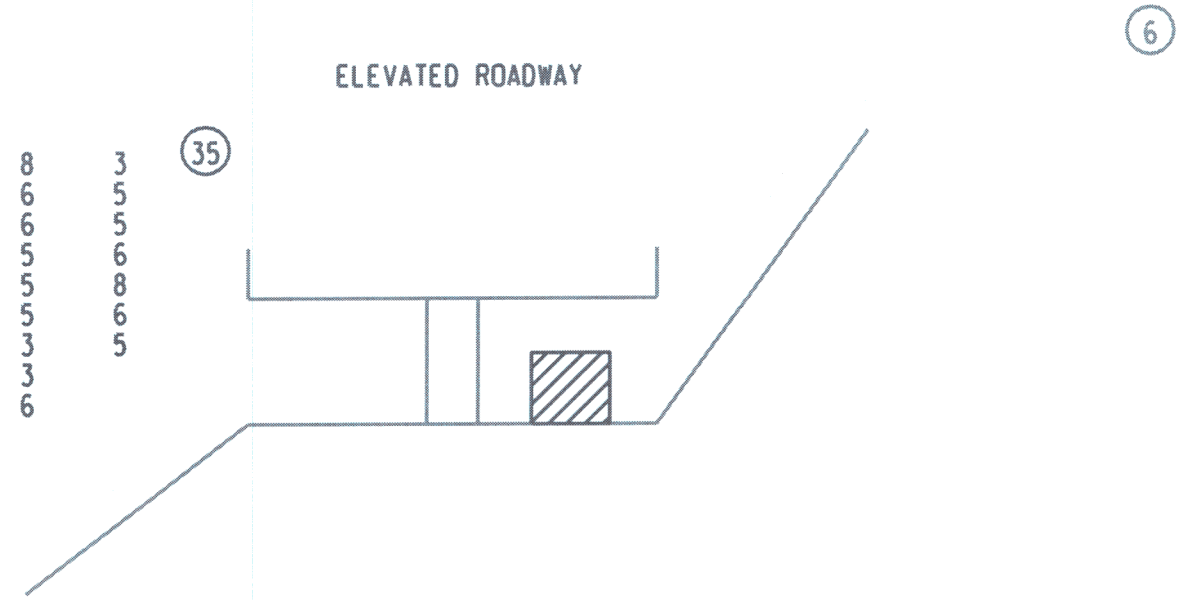
6
ELEVATED ROADWAY
35
8 3
6 5
6 5
5 6
5 8
5 6
3 5
3
6

Draft

ROCK SHED

3

3
5
3
5
3
3
3
3
5
3
3
3
3
2
3
5

27

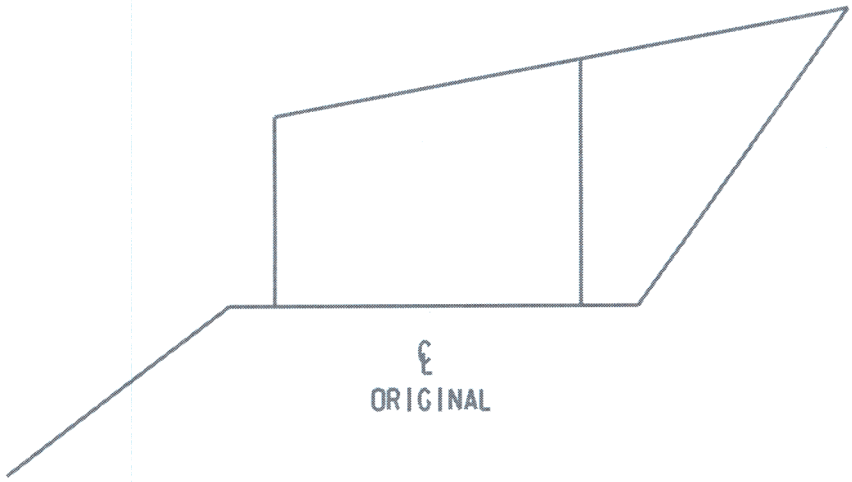

ELEVATED ROADWAY

4

4
2
5
2
3
1
2
2
1
2
2
4
3
3
2
2

14

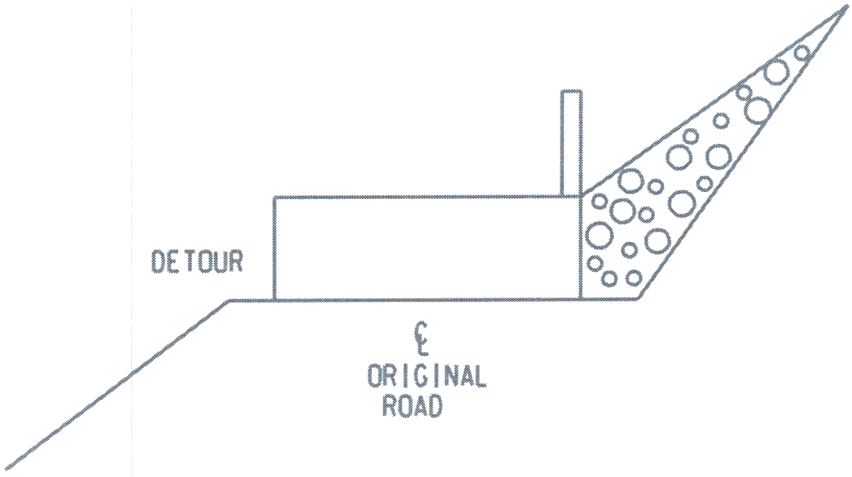

1

Draft

1

SOLDIER PILE

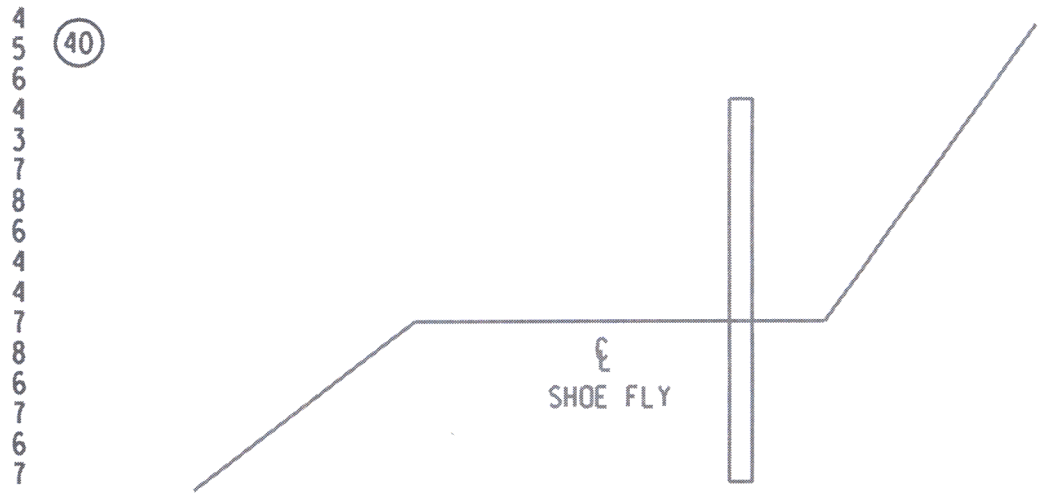

2

MSE WALL

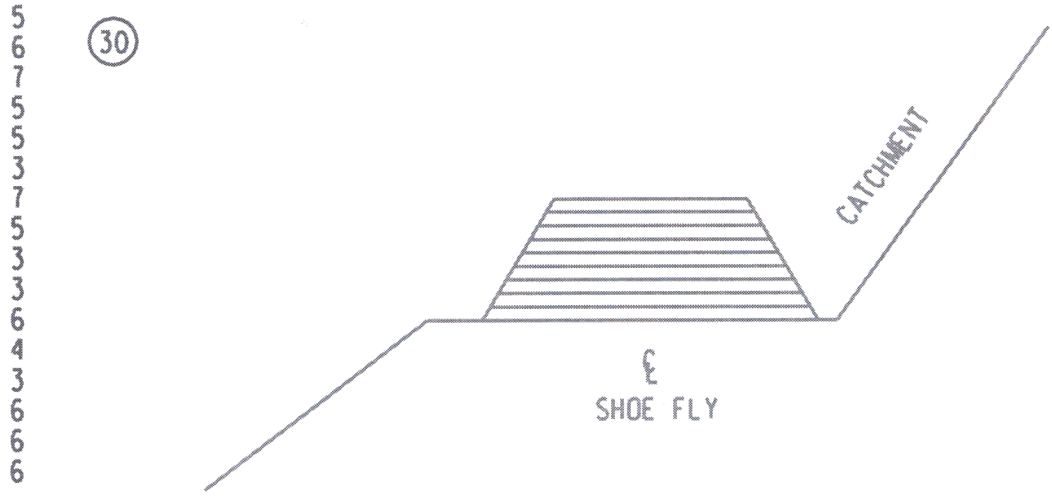

Draft

BRAIN STORMING

- DO NOTHING
- REINFORCEMENT
- REMOVAL - 1
- PROTECTION - ~~1111~~ 1111
- AVOIDANCE - ~~1111~~ 11

PARKING LOT

- PURCHASE RV PARK
- WEST SIDE RIGHT-OF-WAY
- ENV/EIS
- COSTS
- HYDRAULIC STUDIES
- RCC - $90/CYD

ACTION ITEMS

- GEO INVESTIGATION
- MAP OF SLOPE/RECONSTRUCTION
- LIDAR SURVEY
- ALIGNMENT STUDIES
- RECORDS RESEARCH
- INSTRUMENTATION
- SCALING?/ENHANCE CATCHMENT
- SCOURING REVIEW
- BATHYMETRY SURVEY

Draft

REINFORCEMENT OPTIONS

TEAM "A"

Removal:
- Predicated on Rock Investigation that competent rock exists.
- Low probability of success.
- Make this a component of a large strategy that involves other techniques. Concern with tension cracks and material that will come down later.
- Selected scaling for rockfall.

TOE vs. SLOPE

Slope - Rock Bold, Soil Nails, Cable Anchors

Toe - Retaining Structure with an Elevated Roadbed

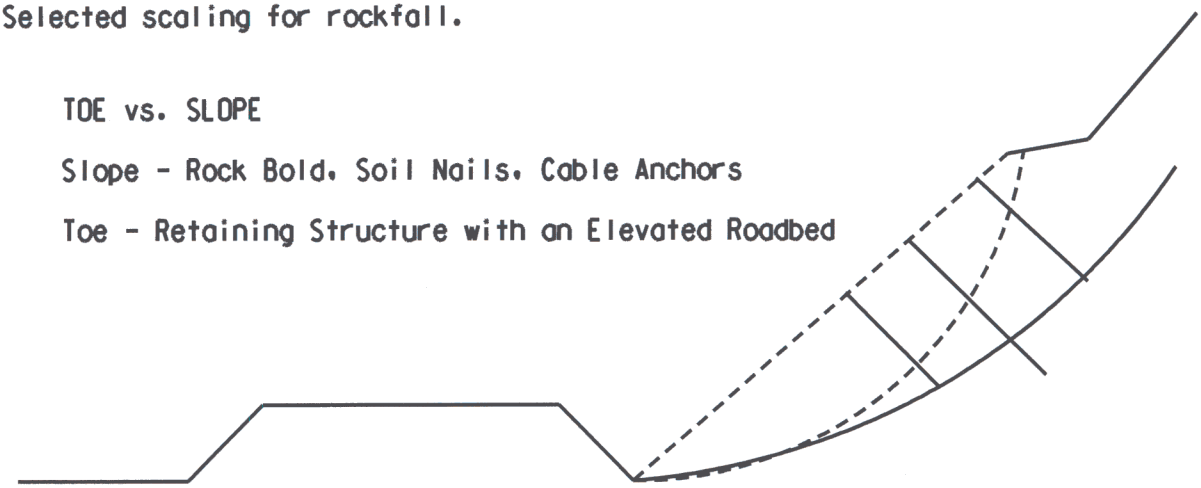

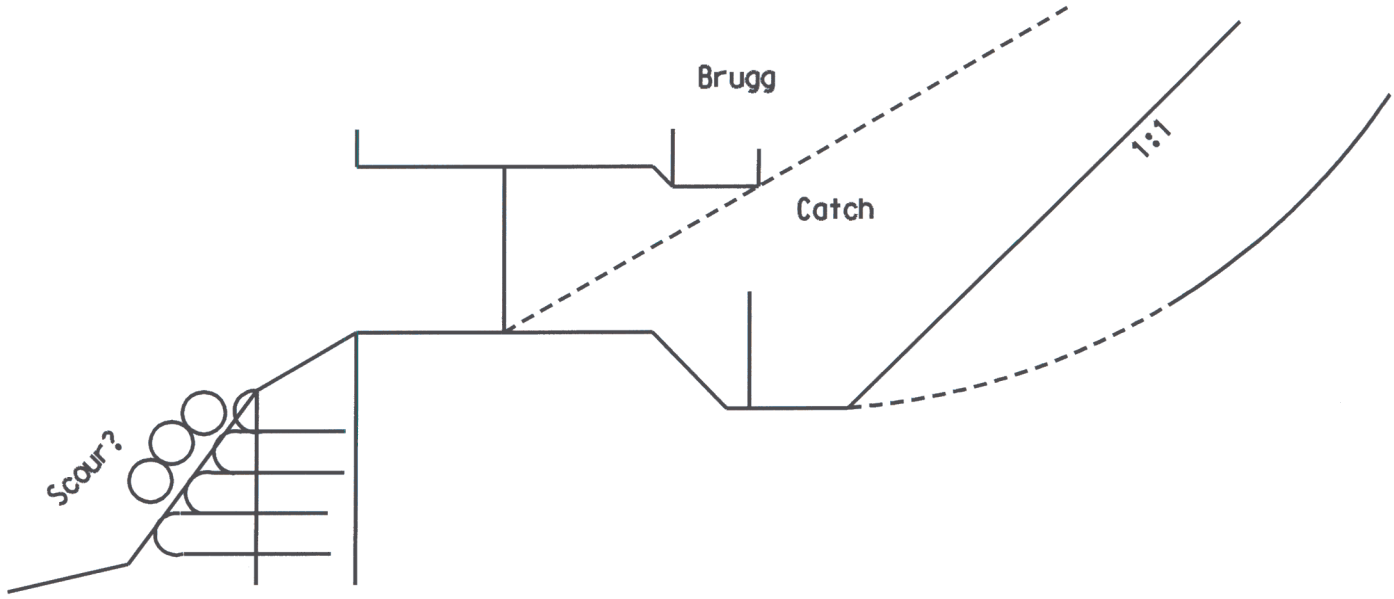

Draft

"A" TEAM

REINFORCEMENT OPTIONS No. 2

- Reinforcement at toe of existing slide to restablish the existing grade at the original ditch. Wall options - shafts, tie backs.
- Catchment areas is on top of the wall area above the road.

CONCERNS:

- Detailed geotech
- Restores original alignment
- Height of wall may be cost prohibitive
- Minor removal of slide debris

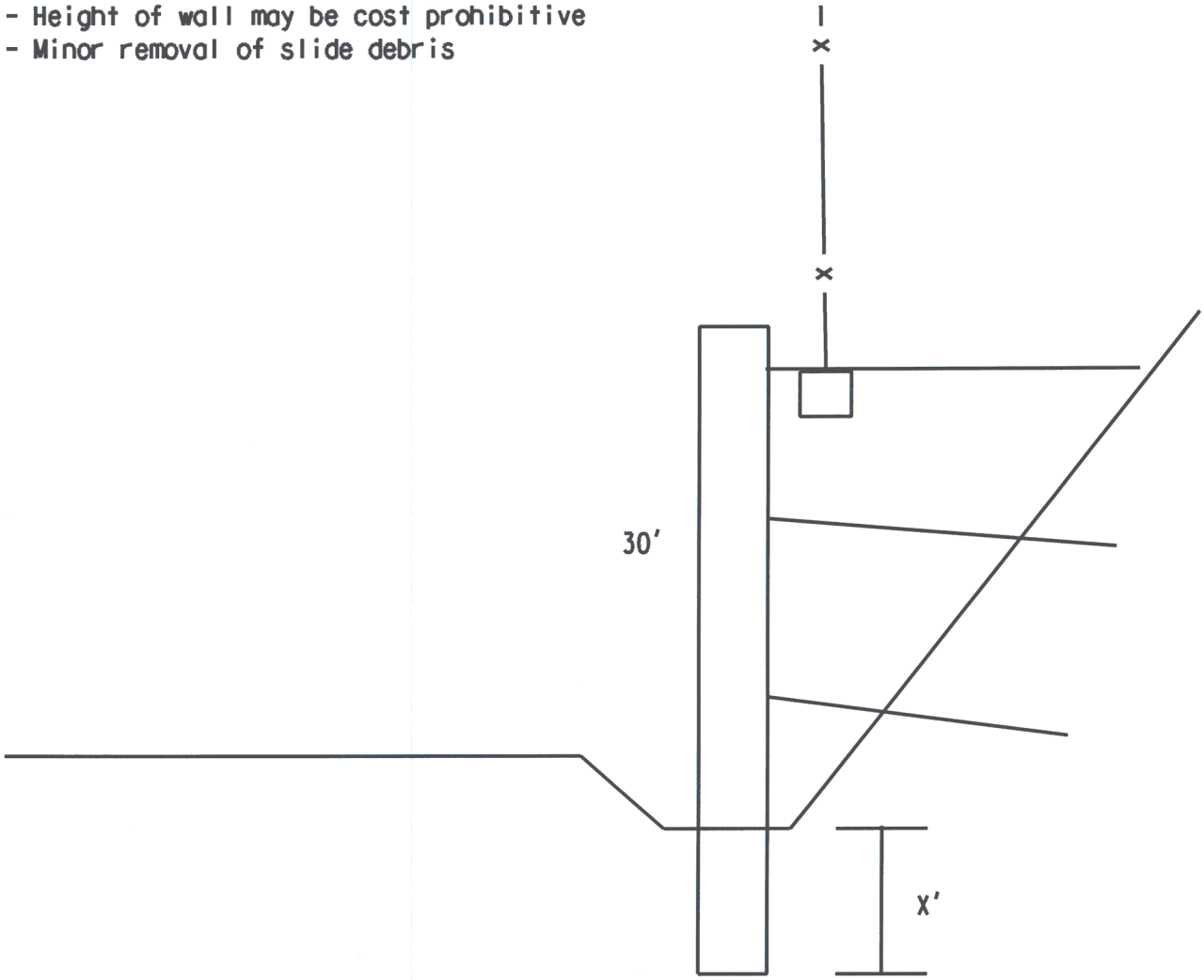

Draft

"A" TEAM

REINFORCEMENT OPTIONS No. 3

Slope Reinforcement

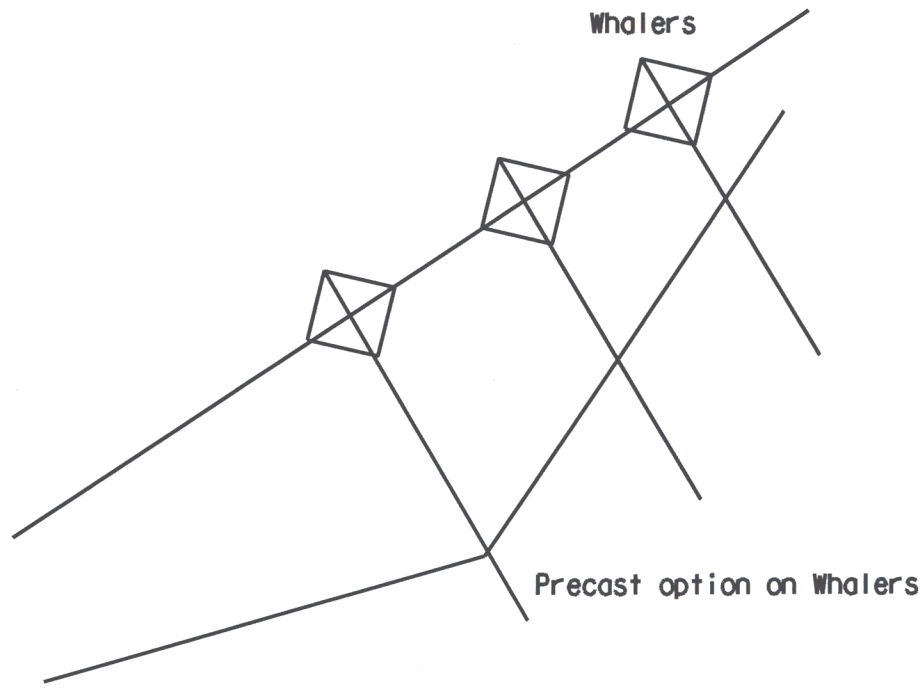

Considered but not sold on this option due to geology

<u>Advantages</u>

Stabilized the slope
Integrated rockfall catchment
Sized for minor events (10 - 25k yds.)

<u>CONCERNS</u>

1. Constuctability
2. Impact on RV Park
3. Detailed geotech investigation due to height of the wall

Draft

"A" TEAM

AVOIDANCE OPTIONS

4

- Tunnel (+ 1000').
- Bridges and relocate to the west bank.
- Bridge/Elevated Roadway that permits slide debris to pass under.
- Relocate road toward River with realignment to recreate catchment.
- Avoidance Options tend to be high cost or high environmental impacts and Right-of-Way implications.

PROTECTION

Rockfall Structures
- Half shed (elevated ditch concept)
- Full shed

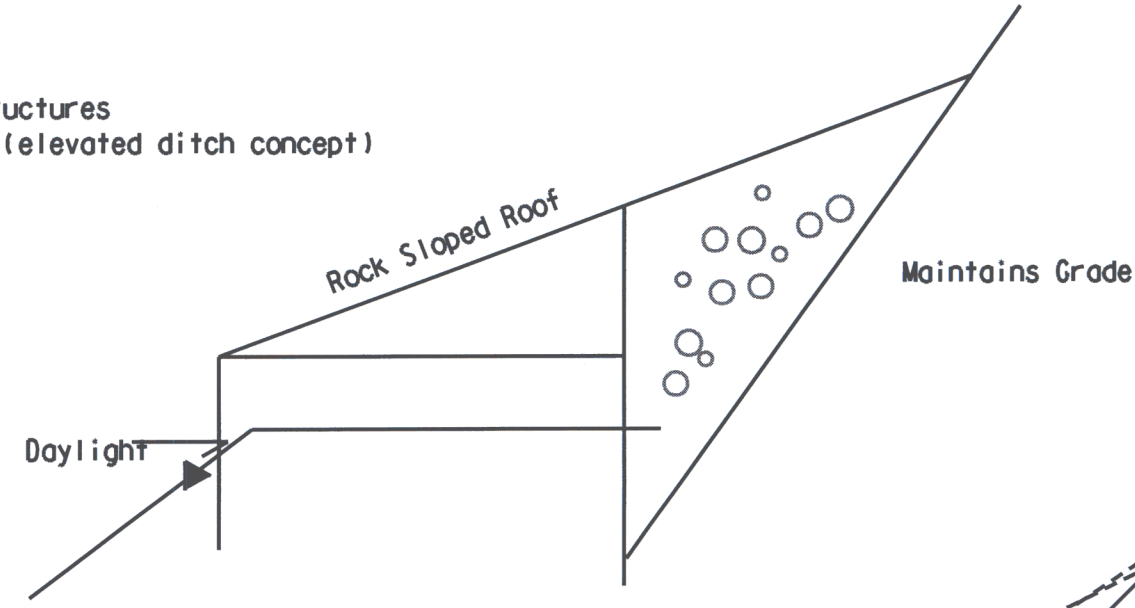

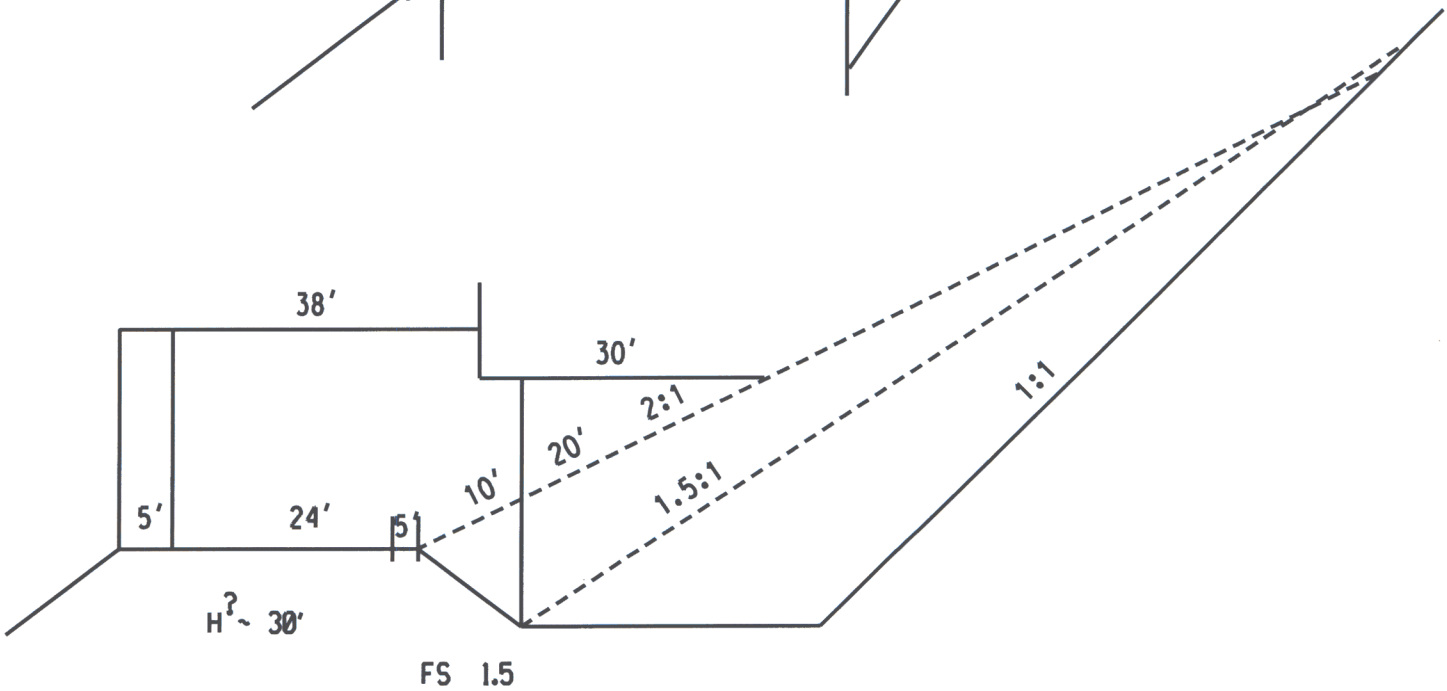

Draft

"A" TEAM

AVOIDANCE OPTIONS

1. Cross River 2 - Bridges - Mile Road Construction/Retaining Walls.
2. Move alignment West with Bridge into River.
3. Tunnel to the East.
4. Elevated Road Section.
5. Rock Fill Encroachment into River.

Reinforcement:

1. Buttress
   a. MSE Wall
      1. At Grade (the Road)
      2. Raise Grade (Elevated Section)
2. Soldier Pile Wall with tie backs.
3. Stabilize in place
   a. Rock bolting with lattice work.
   b. Pressure Grout.

Up slope reiforcement - Applies to All

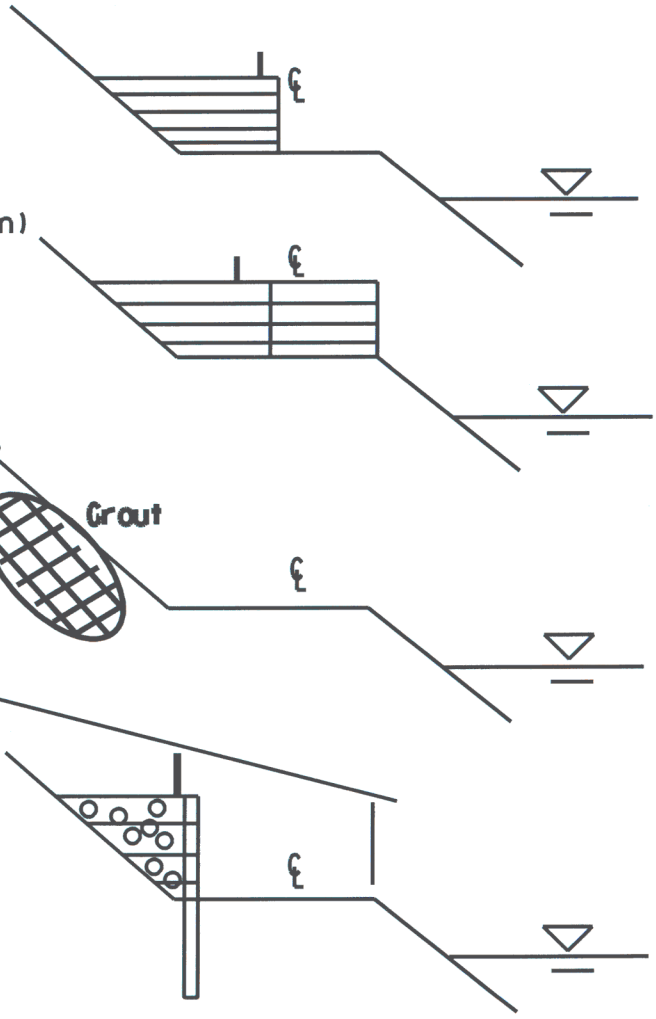

Draft

"B" TEAM

Protection:

1. Soldier Pile/Lagging Wall.
   a. Retain Shoe Fly Alignment
   b. Maintenance/Clean out
   c. 25 - 30 feet High

2. Elevated MSE Road Section
   a. Rock Catchment Area
   b. 25 - 30 feet High
   c. Maintenance/Clean out

3. Rock Shed
   a. Either Alignment
   b. Minimal to no maintenance

4. Cut and Cover Tunnel
   a. Minimal to no maintenace.

5. Butress/MSE/Elevated Ditch.
   a. Requires Maintenance
   b. Requires a Rock Fence.

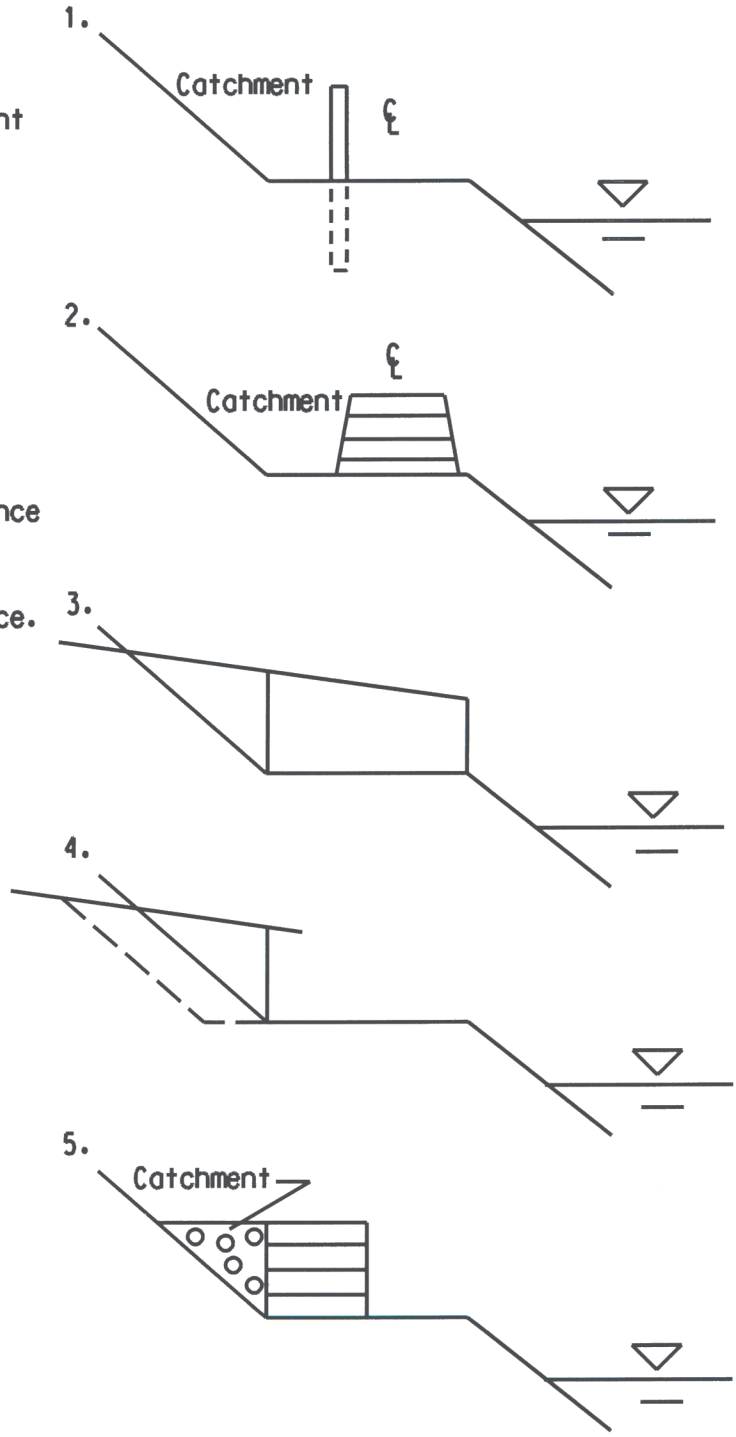

Draft

"B" TEAM

Removal:

1. Remove Slide Debris
2. Remove to Slide Plane
   a. Verticle
   b. Horizontal

Removal:

1. Remove Slide Debris
2. Remove to Slide Plane
   a. Verticle
   b. Horizontal

Protection:	PRO	CON
Soldier Pile	Easy to Construct Rapidly Built	Potential to Fail Up Slope Reinforcement
Elevated MSE	Easy to Construct	Traffic Control Potential to Fail Up Slope Reinforcemnt
Rock Shed	No Maintenance Permanment Fix No Up Slope Reinforcement	Slide Plane? Design Assumptions
Cut & Cover Tunnel	Design Asummptions Permanment Fix	Slide Plane? High Risk During Construction
Reinforcement:		
Buttress	Easy to Construct	Up Slope Reinforcement Assess Limitations to RV Park Large Size (Possible)
Soldier Pile	Easy to Construct	Less Robust than Buttress
Grouting		Low Chance of Success

Draft

"B" TEAM

1

Best Solution Will Contain Some of Each

Reinforcement
Removal
Protection
Avoidance

Do Nothing is the Base of Comparison

Lidar Survey for information & Monitoring

Borings w/sls to Determine Failure Plane

Possible Options

Leave Slide Mass In Place & Provide Rock Fall Protection Wall
Needs to be Maintained with Rock Removal
Won't Stop Massive Slide

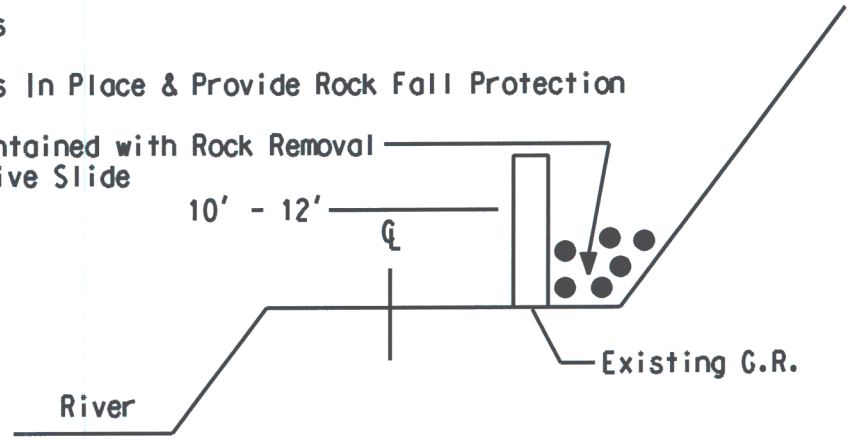

MSE WALL

More Massive Slide Protection

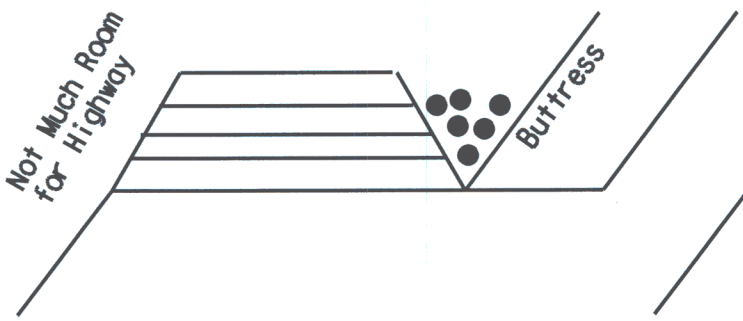

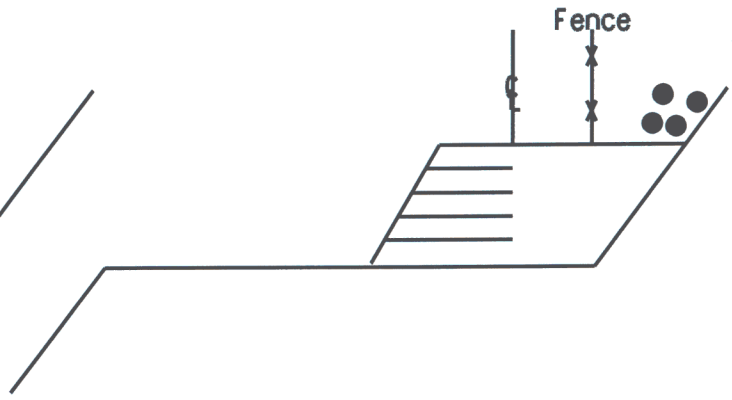

Draft

"C" TEAM

2

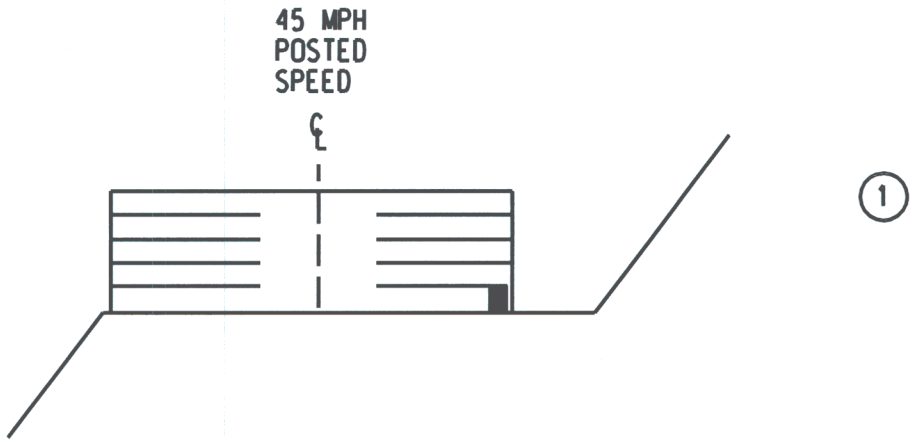

1

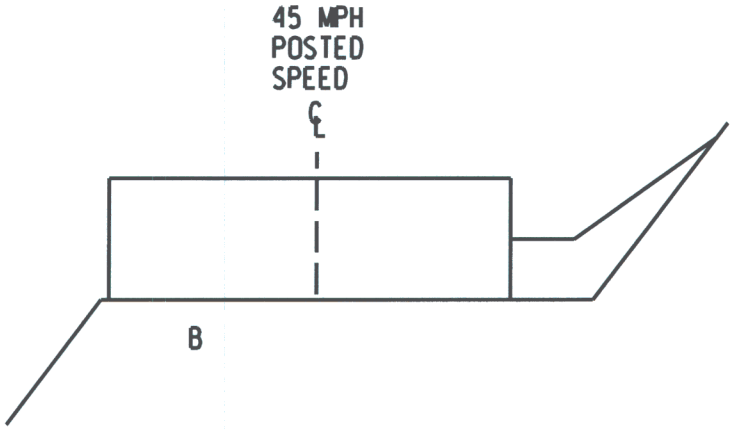

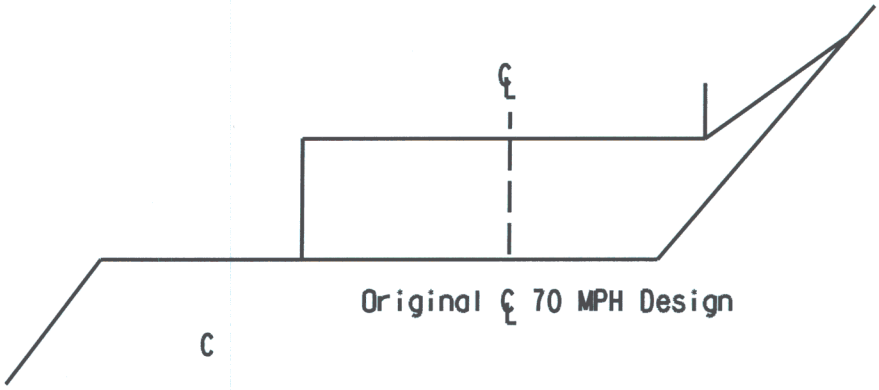

2

Draft

"C" TEAM

3

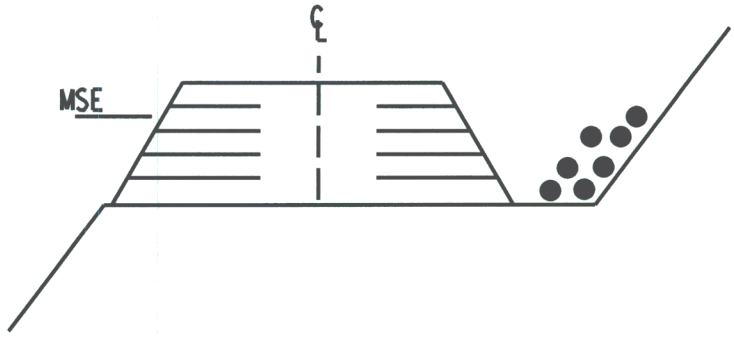

2 A

COVERED ROCK SHED

Protects Existing Alignment from Rock Fall & Slides.
Self Cleaning (Does Nothing to Prevent Slide)

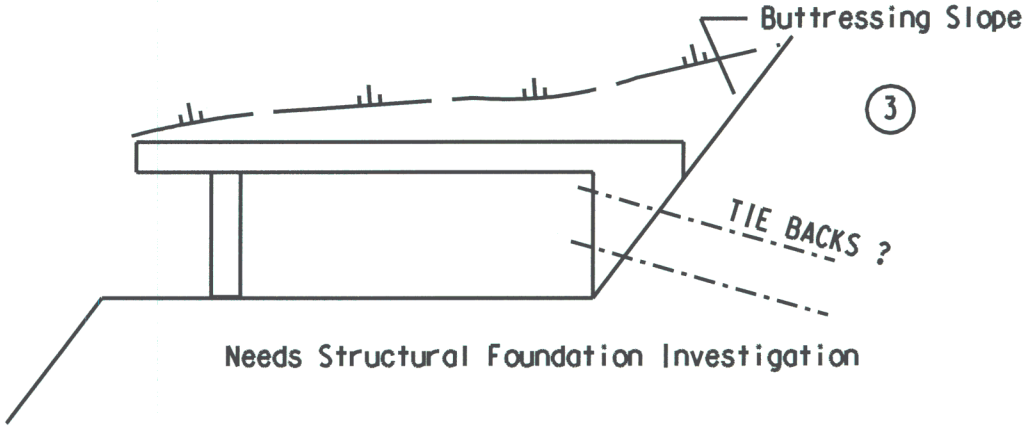

Needs Structural Foundation Investigation

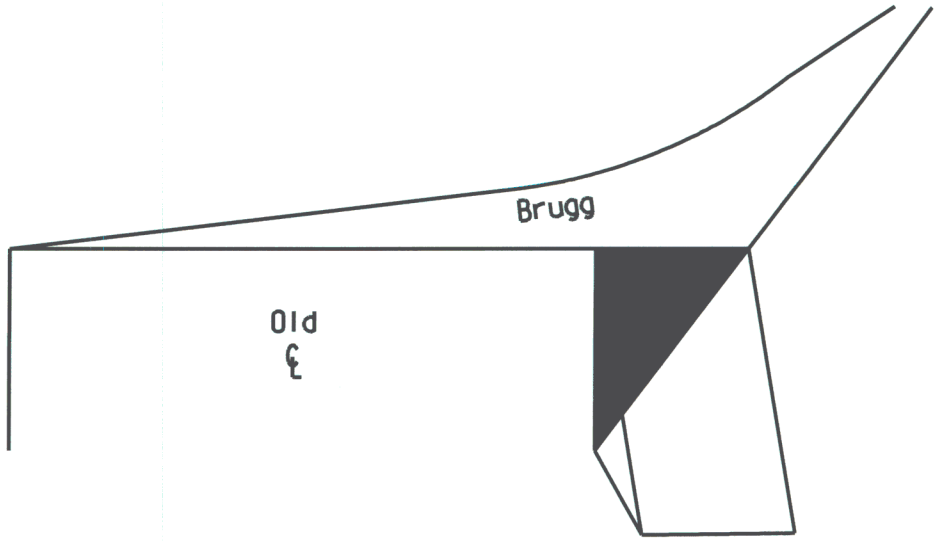

Draft

"C" TEAM

4

BUTTRESS WITH ELEVATED CATCHMENT

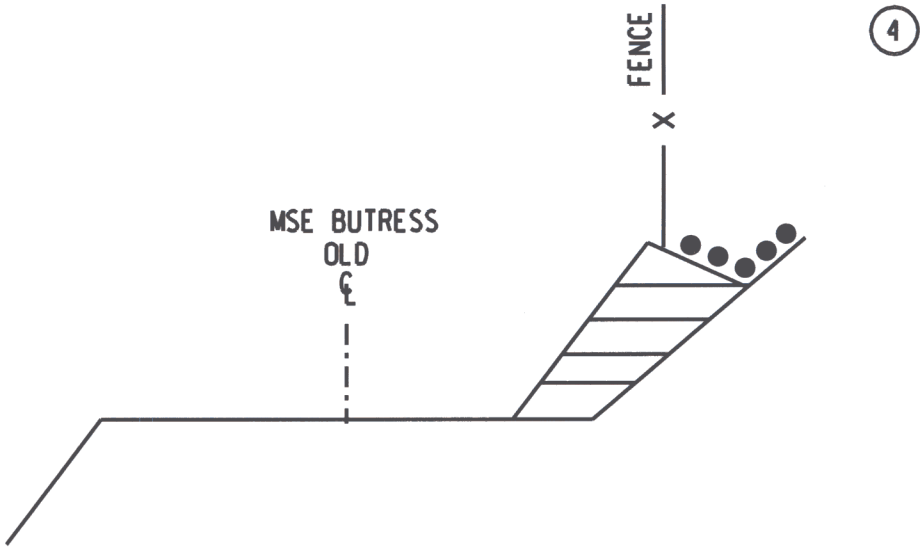

4

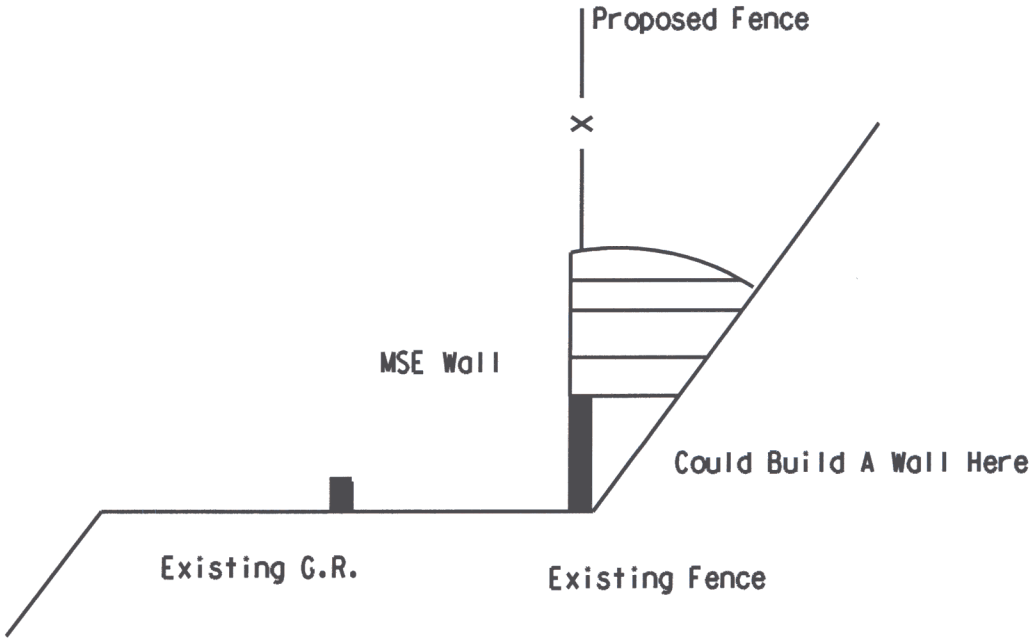

70 MPH Design

Draft

"C" TEAM

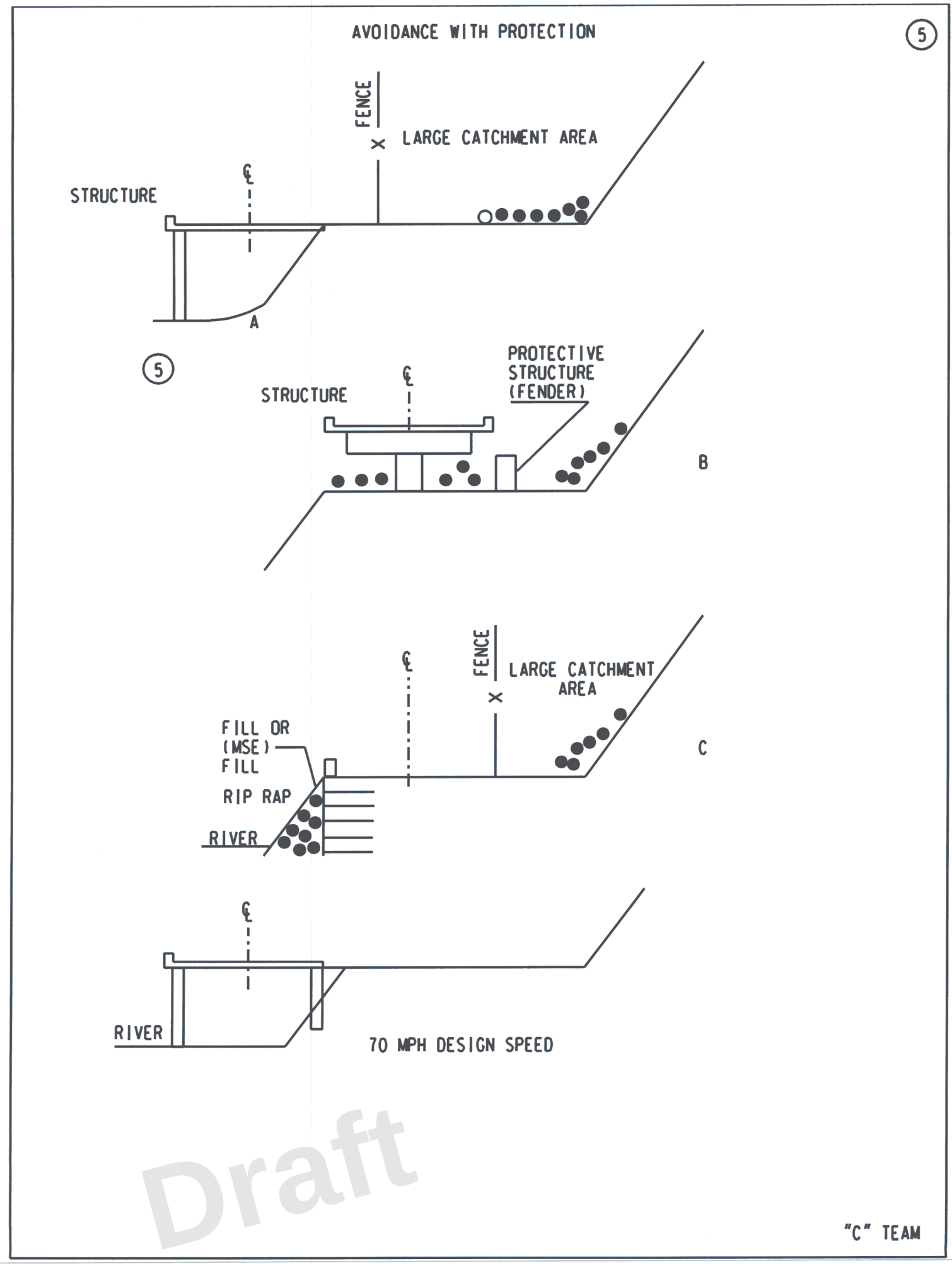
AVOIDANCE WITH PROTECTION
5
FENCE
LARGE CATCHMENT AREA
STRUCTURE
A
5
PROTECTIVE STRUCTURE (FENDER)
STRUCTURE
B
FENCE
LARGE CATCHMENT AREA
FILL OR (MSE) FILL
RIP RAP
RIVER
C
RIVER
70 MPH DESIGN SPEED
Draft
"C" TEAM

UPPER SLOPE (WITH ALL OTHER OPTIONS)

6

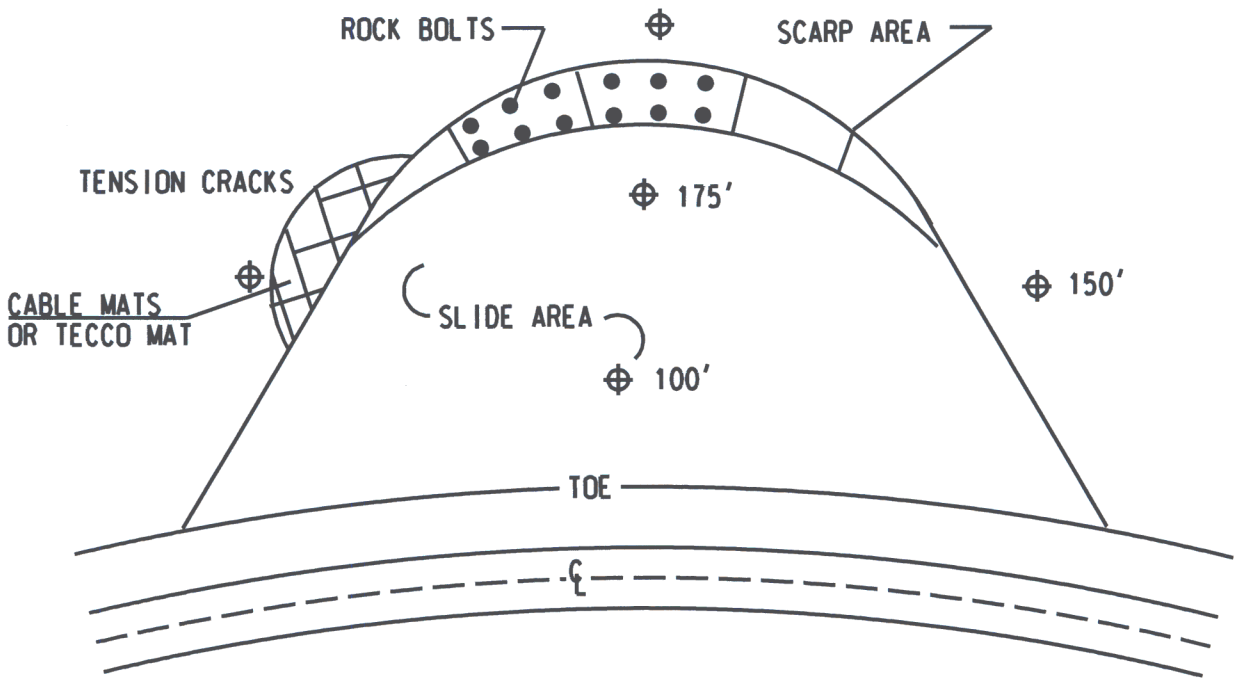

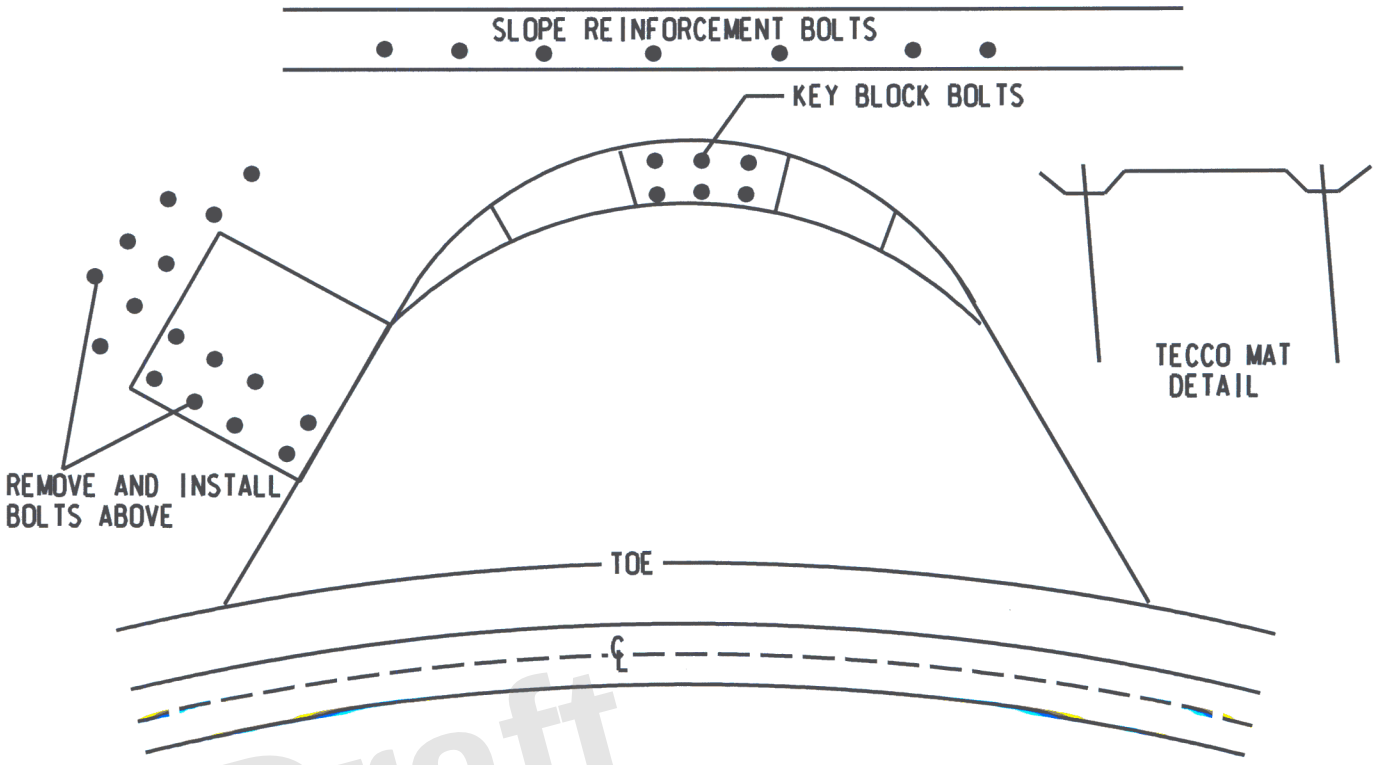

Draft

"C" TEAM

SLOPE LOCATIONS

7

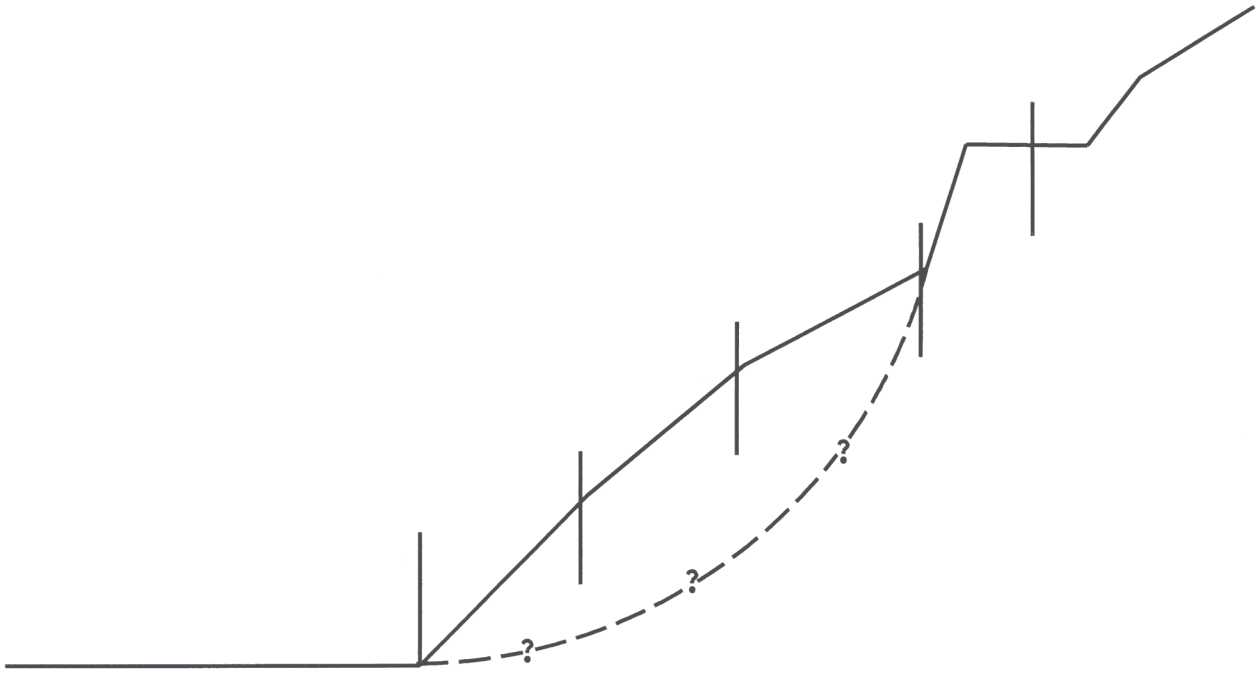

DRILL HOLE BELOW RIVER

Draft

"C" TEAM

1

REALIGNMENT:

a. Rock fill
b. Viaduct
c. Cross River
d. Purchase RV Park and New Alignment @ Detour

MSE Buttress

Raise Grade

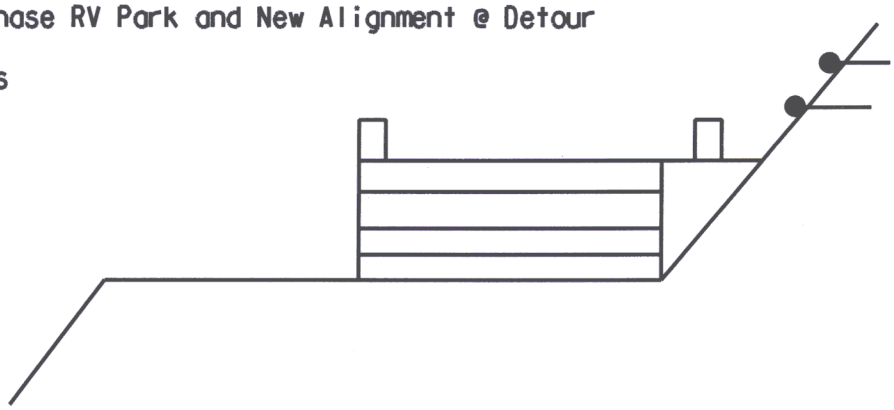

Ground Reinforcement

Remove Slope

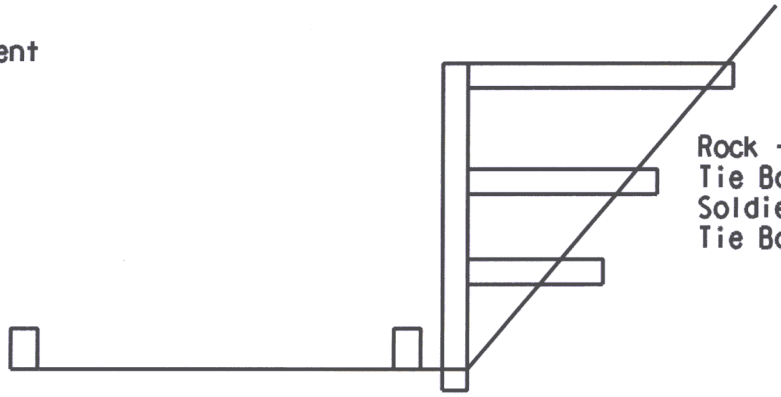

Rock Fall Drapery

Rock Fall Fencing

Tunnel

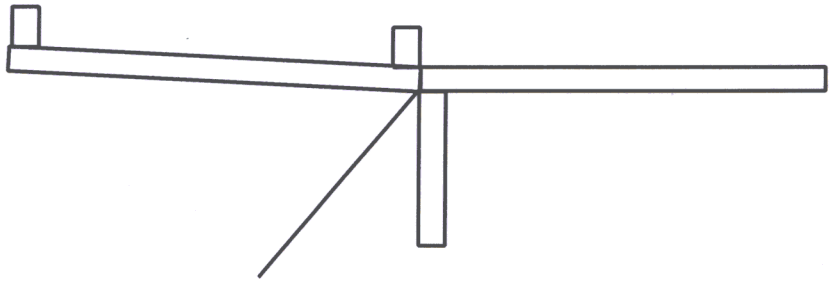

Draft

"D" TEAM

REALIGNMENT

Cross River

Issue	PRO	CON
What's over there?	Complete Avoidance	Cost Environmental Impact Right-of-Way

Rock Fill Realignment

Issues	PRO	CON
River Foundation	Simple	Environmental
Berm Design	Cheap	
(Rock Fall/Rock Slide)		
Further Enlargement of Slide	Shifts Road From Hazard	Right-of-Way

Draft

"D" TEAM

3

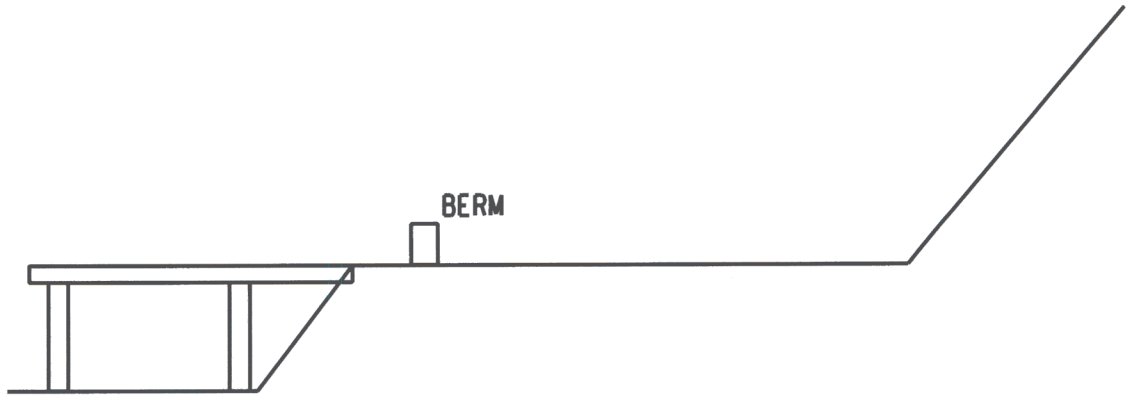

Issues:	PRO	CON
Structure Foundation		Bridge
Berm Design		Cost
(Rock Fall/Rock Slide)		Environmental
Will Foundation Penetrate		Right-of-Way
Rock Fill RSS?	Shifts Road From Hazard	Maintenance
Future		

New Alignment: Current Detour

Issues:	PRO	CON
Design Berm	Cheep	Right-of-Way
Stay Away From River ?	Uses Existing Shoe Fly	Less F/O & Berm
No Cuts	(Modify to 70 MPH)	Less Catchment
Future Enlargement of Slide North		
Is Fill in River Needed ?		

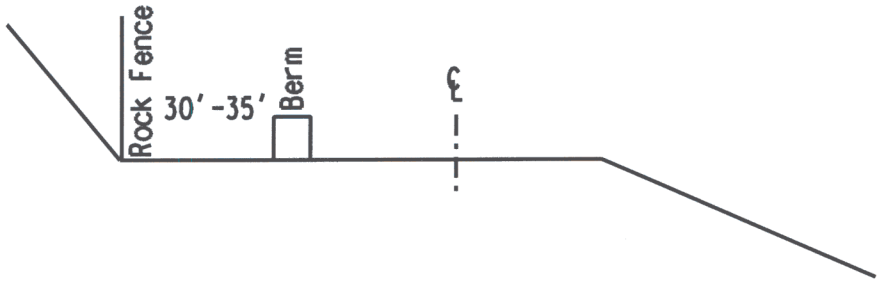

Draft

"C" TEAM

RAISE GRADE MSE / BUTTRESS

4

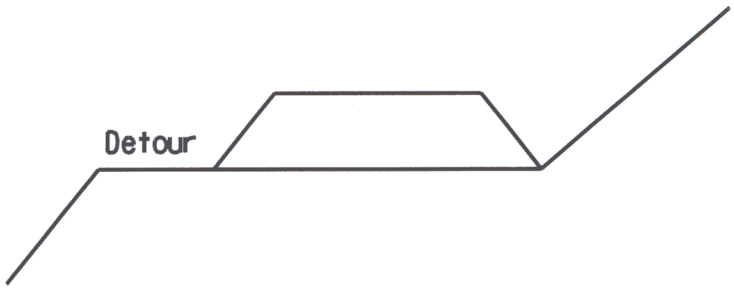

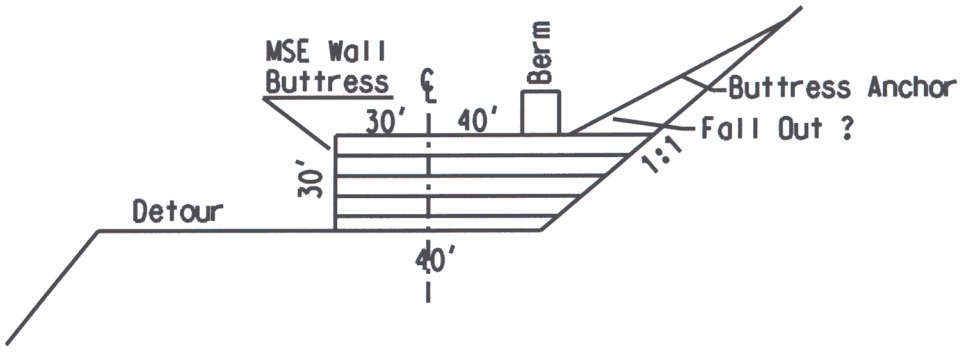

Issues:	PRO	CON
Do We Need Addition Resistance for Slide Access to RV Park Foundation for MSE Is There Paugh Width Full Length of Project ?	Some Mitigation of Slide Avoids River	Construction Sequence Cost

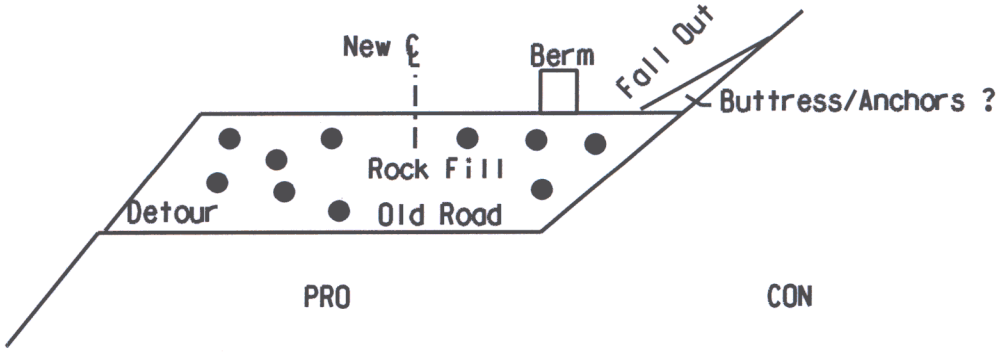

Issues:	PRO	CON
Construction Staging Traffic Control Access to RV Park Foundation for Fill Fill in River ?	Low Cost Mitigation of Slide	Construction Staging Impact on RV Park

Draft

"D" TEAM

5

Ground Reinforcement

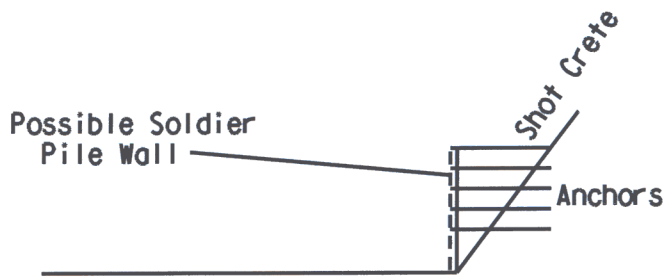

Issues:	PRO	CON
Difficult Investigation	Back to Origianl Alignment	Cost(Expensive)
Construction Difficulties	(Horizontal & Vertical)	Confidence in Solution
Rock Fall ?		Scaling
Voids in Rock		Constructability
Grouting		Large Area
Anchor Capacity in Low Strength Material		Lots of Anchors

Slope Scaling

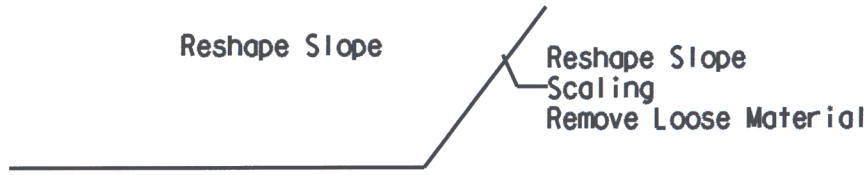

Issues:	PRO	CON
Uncertainty	Original Alignment	Confidence in Solution
Rock Fall	(Horizontal & Vertical)	Could Make Risk Worst
	Low Cost	

Rock Fall Drapery Fence

Issues:	PRO	CON
Investigation	Minimize Rock Fall Problem	Rock Slide
Difficult Design	Original Alignment	Destroy Fence & Property
Partially Effective		Difficult to Construct
		& Maintain

Draft

"D" TEAM

Tunnel

Issues:	PRO	CON
Design	Avoid Slide	Maintenance
Mix Bore	No Environmental Impact	Cost
Ventilation Fire Safety		
Lighting		
Portal Saftey		
Investigation		

Rock Shed

Issues:	PRO	CON
Design	Solves Problem	Maintenance
Retain Wall Anchors	Constructability	Acess to RV Park
Investigation	Keep Current Alignment	
Design roof for Slide		
How Big a Load		
Future Enlargementof Slide North		

Draft

"D" TEAM