PRESTRESSED GIRDER SCHEDULE

GIRDERS		PRESTRESS FORCE ~ KIPS		PRESTRESS LOSSES ~ KSI		CONCRETE STRENGTH ~ KSI		GIRDER DIMENSIONS								END DETAIL		C.G. OF STRAND	
NO.	LOCATION	INITIAL BEFORE LOSSES	FINAL AFTER LOSSES	IMMEDIATE LOSSES	FINAL TOTAL LOSSES	AT RELEASE f'ci	AT 28 DAYS f'c	A	B	C LEFT	C RIGHT	D LEFT	D RIGHT	E	F	LEFT	RIGHT	b GIRDER END	a MID SPAN

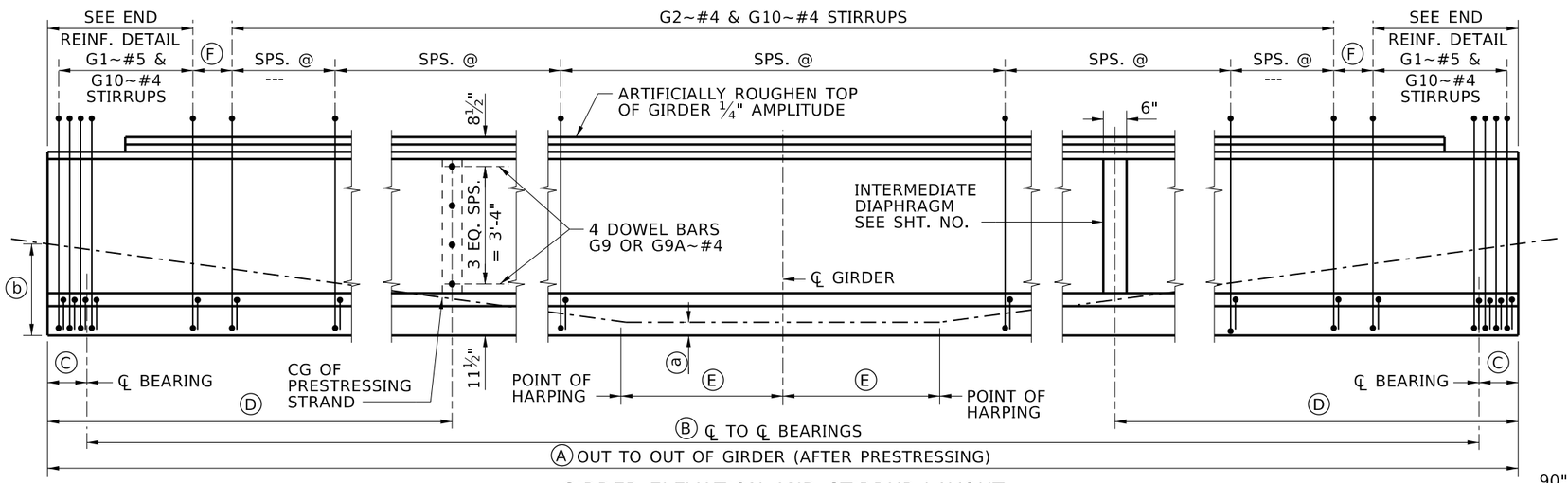

GIRDER ELEVATION AND STIRRUP LAYOUT

NTS

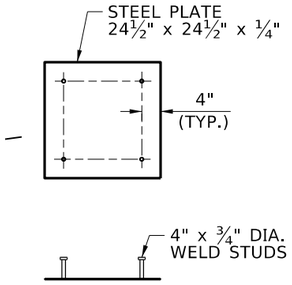

DETAIL 1

⅜"=1'-0"

REINFORCEMENT DIAGRAM

AASHTO M31 GRADE 60 TYPE S

MARK	SIZE	GRADE	SKETCH
G1*	#5	60	5'-3"; 1'-2½"; 4¼"
G2*	#4	60	
G3*	#3	60	5"
G4	#5	60	—
G4A	#5	60	—
G5	#6	60	---
G5A	#6	60	---
G6	#4	60	---
G7	#3	60	Ⓐ - 4"
G7A	#3	60	Ⓐ - 2 (BLOCKOUT + 2")
G8	#8	60	4'-8"; 3'-6"; 1'-3"
G9	#4	60	4'-0"
G9A	#4	60	2'-0"
G10*	#4	60	4½"; 10"; 5"; 3; 9½"
G11	#3	60	2'-11"

NOTES

1. DIMENSIONS TO STIRRUPS AND DOWEL BARS ARE GIVEN AT ℄ OF GIRDER.
2. SEE PRESTRESSED GIRDER GENERAL DETAILS AND PRESTRESSED BULB TEE GIRDER DETAILS SHEETS FOR NOTES, DIAPHRAGM DOWEL DETAILS, END DETAILS AND DEFLECTION DATA.
3. BEND DETAILS IN ACCORDANCE WITH LATEST ACI STANDARD PRACTICE.

* STIRRUP AND TIE HOOK BEND DIMENSIONS. STIRRUPS AND TIES MUST HAVE A MINIMUM 1" COVER OUTSIDE OF BARS.

GIRDER VOLUME.....4.583 CF/FT

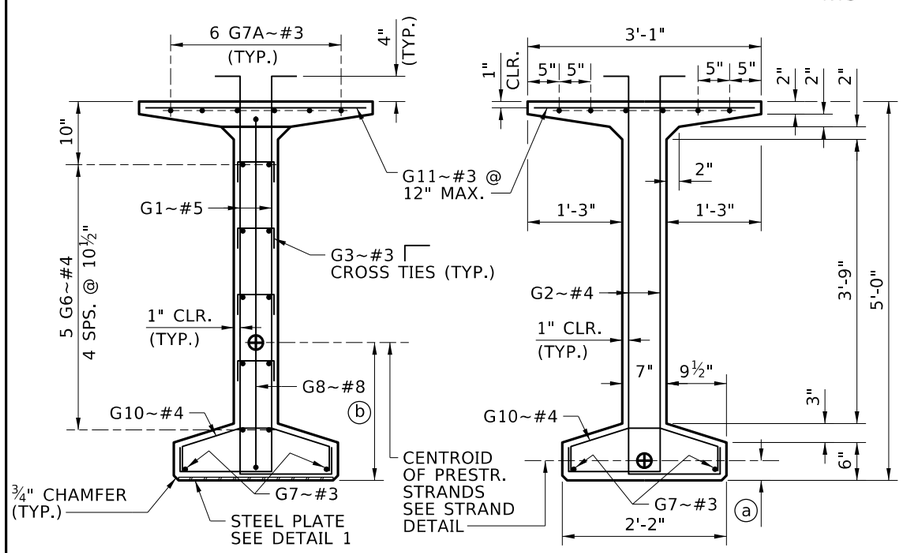

SECTION AT END OF GIRDER

½"=1'-0"

SECTION AT ℄ SPAN

½"=1'-0"

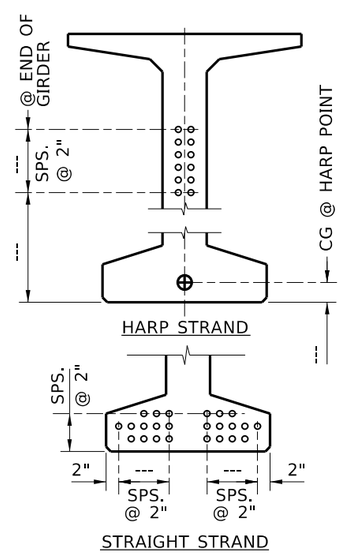

STRAND DETAIL

½"=1'-0"

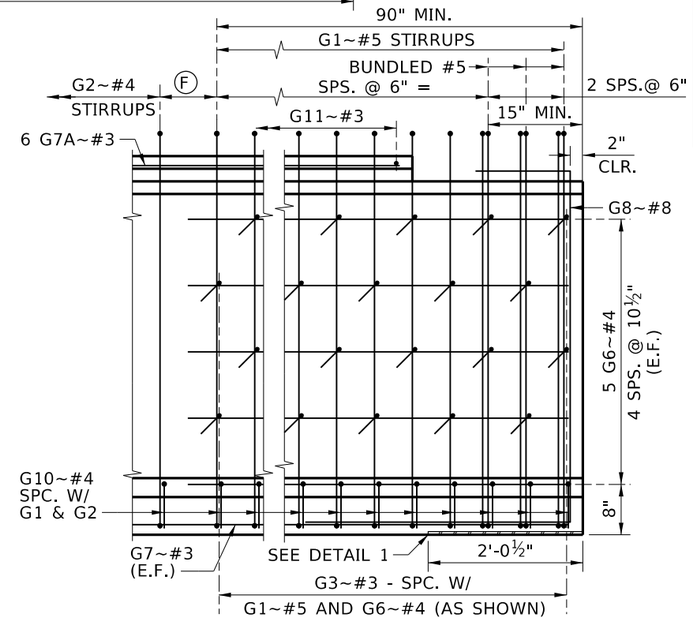

END REINFORCEMENT DETAIL

½"=1'-0"

REVISIONS			
NO.	DATE	BY	DESCRIPTION
△			
△			
△			
△			
△			

DESIGNED
DESIGN CHECKED
DETAILED
DWG. CHECKED
CORRECTIONS

SCALES SHOWN ARE FOR 11" X 17" PRINTS ONLY

CADD FILE NAME Standards/Bridge Standard Drawings/B05_3F-1.DGN

DRAWING DATE: DEC 2025

IDAHO TRANSPORTATION DEPARTMENT

YOUR Safety→YOUR Mobility→YOUR Economic Opportunity

APPROVED BY: BRIDGE ENGINEER MICHAEL T. JOHNSON DATE:

ENGLISH

PROJECT NO.

60" BULB TEE PRESTRESSED GIRDER

(DISTRICT 3-6)

BRIDGE DESIGN MANUAL B5.3F-1

BRIDGE PLANS

BRIDGE KEY NO.

COUNTY | KEY NO.

BRIDGE DWG. NO. | SHEET OF