## PRESTRESSED GIRDER SCHEDULE

| GIRDERS | | PRESTRESS FORCE ~ KIPS | | PRESTRESS LOSSES ~ KSI | | CONCRETE STRENGTH ~ KSI | | GIRDER DIMENSIONS | | | | | | | | END DETAIL | | C.G. OF STRAND | |
|---|---|---|---|---|---|---|---|---|---|---|---|---|---|---|---|---|---|---|---|
| NO. | LOCATION | INITIAL BEFORE LOSSES | FINAL AFTER LOSSES | IMMEDIATE LOSSES | FINAL TOTAL LOSSES | AT RELEASE f'ci | AT 28 DAYS f'c | A | B | C LEFT | C RIGHT | D LEFT | D RIGHT | E | F | LEFT | RIGHT | b GIRDER END | a MID SPAN |
| | | | | | | | | | | | | | | | | | | | |
| | | | | | | | | | | | | | | | | | | | |

## REINFORCEMENT DIAGRAM

AASHTO M31 GRADE 60 TYPE S

| MARK | SIZE | GRADE | SKETCH |
|---|---|---|---|
| G1* | #5 | 60 | 5'-9"; 1'-8¼"; 3½" |
| G2* | #4 | 60 | |
| G3* | #3 | 60 | 4" |
| G4 | #5 | 60 | — |
| G4A | #5 | 60 | — |
| G5 | #6 | 60 | --- |
| G5A | #6 | 60 | --- |
| G6 | #4 | 60 | --- |
| G7 | #3 | 60 | A - 4" |
| G7A | #3 | 60 | A - 2 (BLOCKOUT + 2") |
| G8 | #8 | 60 | 5'-0"; 3'-6"; 1'-3" |
| G9 | #4 | 60 | 4'-0" |
| G9A | #4 | 60 | 2'-0" |
| G10* | #4 | 60 | 3½"; 17"; 4"; 4½"; 13⅛" |
| G11 | #3 | 60 | 3'-11" |

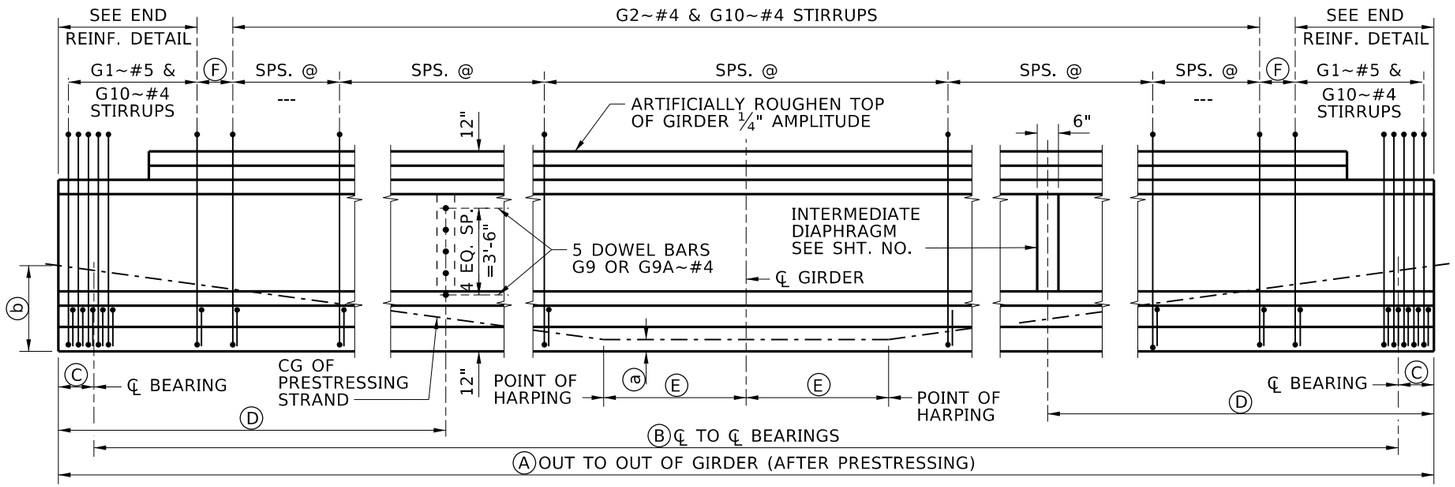


GIRDER ELEVATION AND STIRRUP LAYOUT

NTS

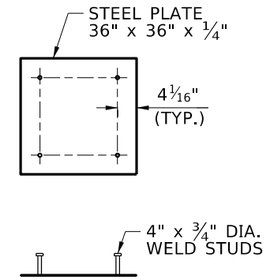


DETAIL 1

⅜"=1'-0"

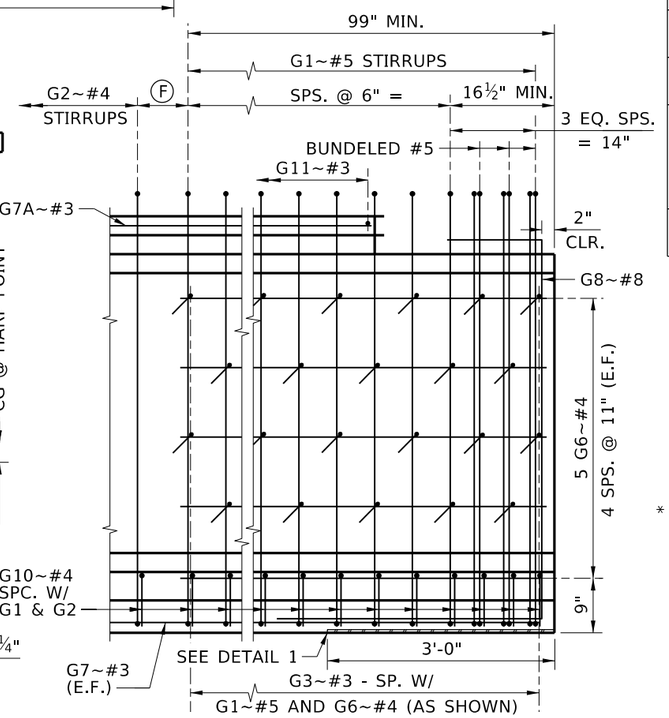


END REINFORCEMENT DETAIL

½"=1'-0"

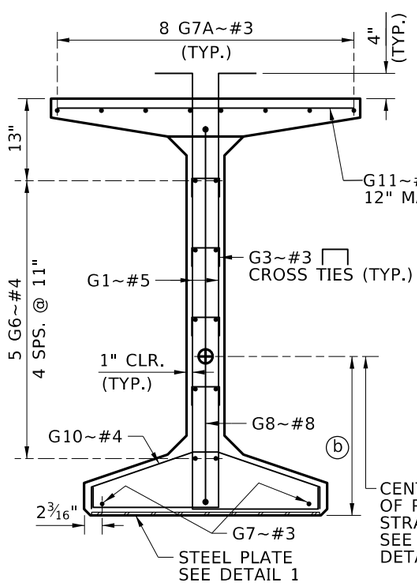


SECTION AT END OF GIRDER

½"=1'-0"

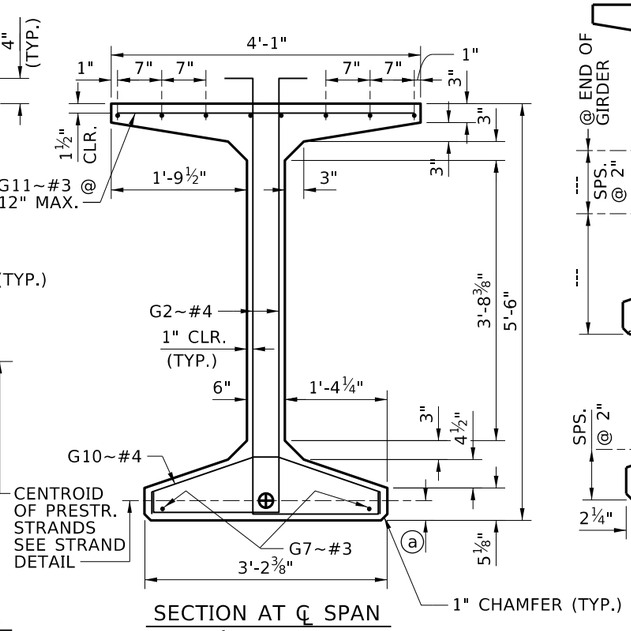


SECTION AT ℄ SPAN

½"=1'-0"

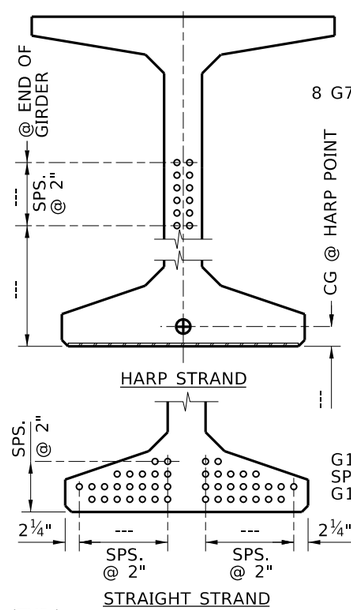


STRAND DETAIL

½"=1'-0"

NOTES

1. DIMENSIONS TO STIRRUPS AND DOWEL BARS ARE GIVEN AT ℄ OF GIRDER.
2. SEE PRESTRESSED GIRDER GENERAL DETAILS AND PRESTRESSED WF GIRDER DETAILS SHEETS FOR NOTES, DIAPHRAGM DOWEL DETAILS, END DETAILS AND DEFLECTION DATA.
3. BEND DETAILS IN ACCORDANCE WITH LATEST ACI STANDARD PRACTICE.

STIRRUP AND TIE HOOK BEND DIMENSIONS.

* STIRRUPS AND TIES MUST HAVE A MINIMUM 1" COVER OUTSIDE OF BARS.

GIRDER VOLUME.....6.033 CF/FT

| REVISIONS | | | |
|---|---|---|---|
| NO. | DATE | BY | DESCRIPTION |
| | | | |
| | | | |
| | | | |
| | | | |
| | | | |

DESIGNED
DESIGN CHECKED
DETAILED
DWG. CHECKED
CORRECTIONS

SCALES SHOWN ARE FOR 11" X 17" PRINTS ONLY

CADD FILE NAME Standards/Bridge Standard Drawings/B05_3N-1.DGN

DRAWING DATE: DEC 2025

IDAHO TRANSPORTATION DEPARTMENT

YOUR Safety→YOUR Mobility→YOUR Economic Opportunity

APPROVED BY: BRIDGE ENGINEER MICHAEL T. JOHNSON DATE:

ENGLISH

PROJECT NO.

WF66G PRESTRESSED GIRDER

(DISTRICT 3-6)

BRIDGE DESIGN MANUAL B5.3N-1

BRIDGE PLANS

BRIDGE KEY NO.

COUNTY | KEY NO.

BRIDGE DWG. NO. | SHEET OF