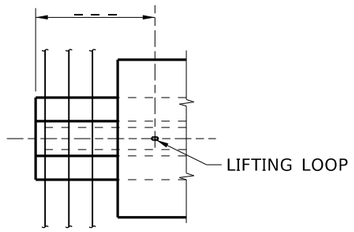

PLAN

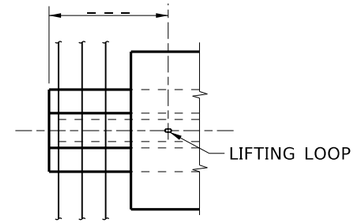

PLAN

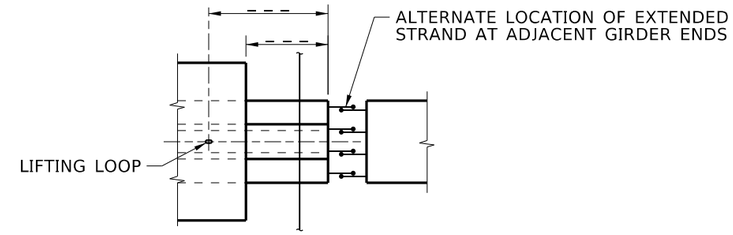

PLAN

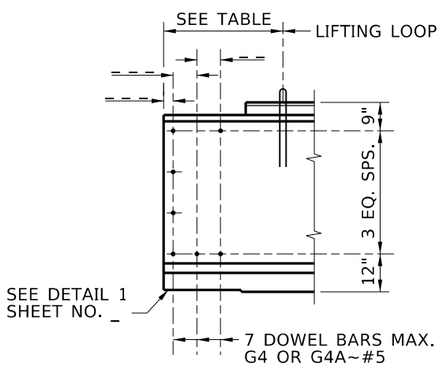

ELEVATION

TYPE A
EXPANSION

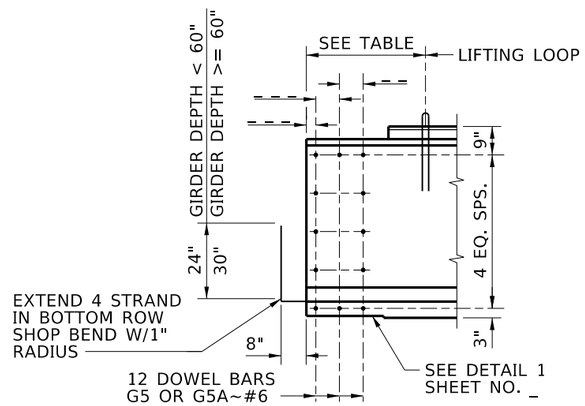

ELEVATION

TYPE B
FIXED

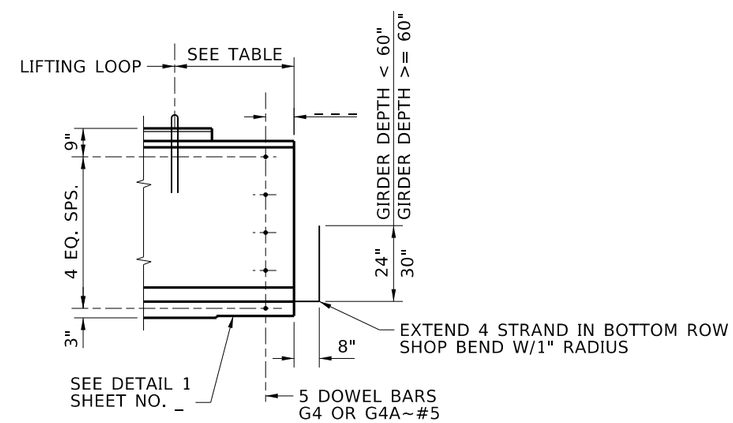

ELEVATION

TYPE C
POSITIVE MOMENT
CONNECTION

GIRDER END DETAILS

¼"=1'-0"

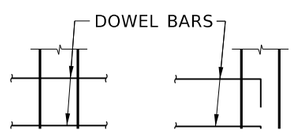

INTERIOR GIRDERS
WITH NON-STAGGERED
DIAPHRAGMS

FOR STAGGERED
DIAPHRAGMS AND
EXTERIOR GIRDERS

INTERMEDIATE DIAPHRAGM DOWEL DETAILS

¼"=1'-0"

	MIN.	MAX.
RELEASE		
ERECTION		

LIFT LOOP LOCATION

REVISIONS			
NO.	DATE	BY	DESCRIPTION
△			
△			
△			
△			
△			

DESIGNED
DESIGN CHECKED
DETAILED
DWG. CHECKED
CORRECTIONS

SCALES SHOWN ARE FOR 11" X 17" PRINTS ONLY

CADD FILE NAME
Standards\Standard Bridge Drawings\B05_3Q_3.dgn

DRAWING DATE:
DEC 2025

IDAHO TRANSPORTATION DEPARTMENT
YOUR Safety→YOUR Mobility→YOUR Economic Opportunity

APPROVED BY:
BRIDGE ENGINEER MICHAEL T. JOHNSON DATE:

ENGLISH

PROJECT NO.

PRESTRESSED BULB TEE GIRDER DETAILS

BRIDGE DESIGN MANUAL, B5.3Q-3

BRIDGE PLANS

BRIDGE KEY NO.

COUNTY | KEY NO.

BRIDGE DWG. NO. | SHEET OF