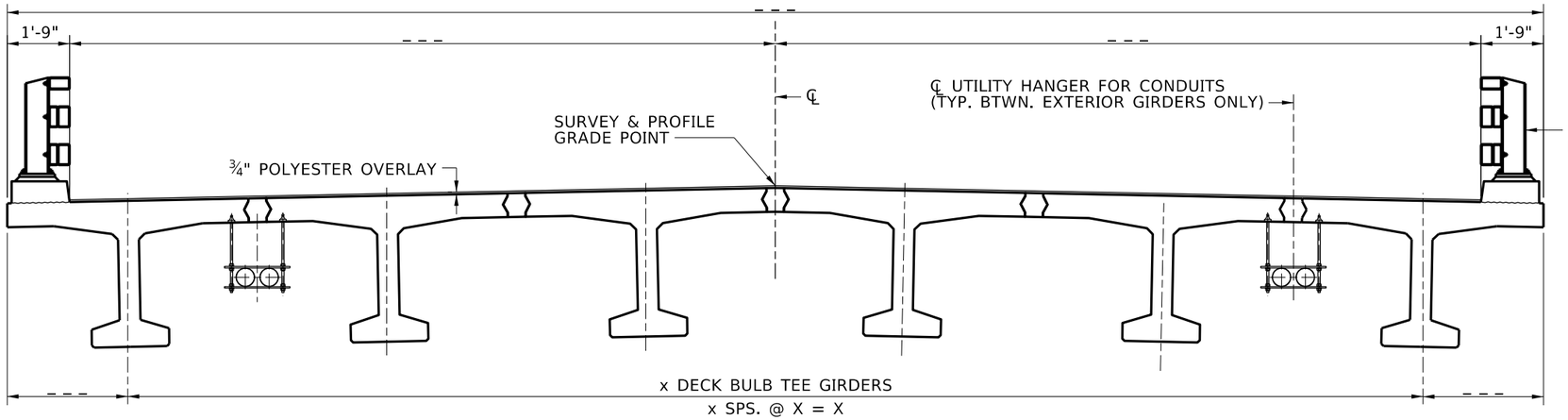

TYPICAL SECTION
¼"=1'-0"

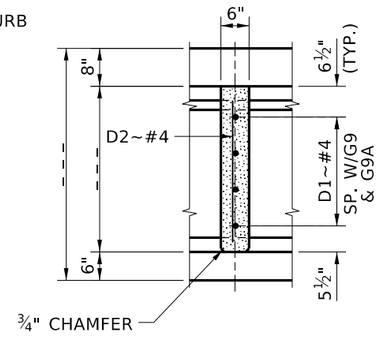

SECTION B-B
⅜"=1'-0"

GIRDER NOTES:

1. REFER TO SPECIAL PROVISIONS FOR REQUIREMENTS FOR ALTERNATE PRECAST PRESTRESSED GIRDER SECTIONS.
2. THE CURB MAY BE CAST DIRECTLY ONTO THE EXTERIOR GIRDERS IN THE PRECAST YARD BEFORE SHIPPING TO THE JOB SITE. THE CURB MUST BE A SECONDARY CAST. THIS METHOD REQUIRES APPROVAL BEFORE CASTING THE GIRDERS. SHOW DETAILS ON THE SHOP DRAWINGS.
3. PROVIDE A SCREED OR FLOAT FINISH TO THE TOP SURFACE OF THE GIRDER IN ACCORDANCE WITH 502.03.
4. SHOW THE SIZE AND LOCATION OF CAST-IN HOLES ON THE SHOP DRAWINGS. FIELD-DRILLED HOLES ARE NOT PERMITTED.
5. PROVIDE TEMPORARY BRACING AT EACH END OF THE GIRDER TO MAINTAIN GIRDER STABILITY. PLACE TEMPORARY BRACING BEFORE RELEASING THE GIRDER FROM ERECTION EQUIPMENT. REMOVE TEMPORARY BRACING AS NOTED IN THE CONSTRUCTION SEQUENCE. SUBMIT TEMPORARY BRACING LOCATIONS, BRACING AND CONNECTION DETAILS AND ANY REQUIRED ADDITIONAL GIRDER REINFORCEMENT IN THE SHOP DRAWINGS. PROVIDE TEMPORARY BRACING DESIGN AND DETAILS THAT ARE SIGNED AND SEALED BY AN IDAHO LICENSED PROFESSIONAL ENGINEER.
6. SUBMIT A METHOD OF EQUALIZING THE DECK BULB TEE GIRDER CAMBERS FOR REVIEW AND APPROVAL. EQUALIZE GIRDER CAMBERS UTILIZING THE APPROVED METHOD WHEN THE DIFFERENCE IN GIRDER CAMBERS BETWEEN ADJACENT GIRDERS MEASURED AT MID-SPAN EXCEEDS ¼ INCH. NOTIFY THE ENGINEER BEFORE GIRDER EQUALIZATION WHEN CAMBERS BETWEEN ADJACENT GIRDERS EXCEEDS 1.5 INCHES. GIRDER CAMBER EQUALIZATION IS A PROGRESSIVE OPERATION THAT REQUIRES STARTING AT THE LOCATION OF MAXIMUM CAMBER DIFFERENCE AND PROGRESSING TO THE LOCATION OF MINIMUM CAMBER DIFFERENCE.
7. CLEAN AND PRESOAK CLOSURE POUR AREAS WITH POTABLE WATER IMMEDIATELY BEFORE PLACING CLOSURE POUR CONCRETE.
8. PROVIDE CLOSURE POUR CONCRETE CONFORM TO THE REQUIREMENTS OF S501-40A.
9. FOR ULTRA HIGH PERFORMANCE CONCRETE, NO VEHICULAR TRAFFIC IS ALLOWED ON THE SURFACE UNTIL THE CLOSURE POUR CONCRETE HAS ATTAINED A MINIMUM COMPRESSIVE STRENGTH OF 14,000 PSI AND HAS CURED FOR 4 DAYS.

9A. FOR HIGH EARLY STRENGTH CONCRETE, ENSURE A MINIMUM COMPRESSIVE STRENGTH OF 3,000 PSI AT DAY 1 AND 5,000 PSI AT 7 DAYS. NO VEHICULAR TRAFFIC IS ALLOWED ON THE STRUCTURE UNTIL THE CLOSURE POUR CONCRETE HAS ATTAINED A MINIMUM COMPRESSIVE STRENGTH OF 5,000 PSI.

10. CONSTRUCTION SEQUENCE:
    - A. ERECT GIRDERS AND INSTALL TEMPORARY BRACING.
    - B. EQUALIZE GIRDER CAMBER.
    - C. PLACE INTERMEDIATE AND END DIAPHRAGMS.
    - D. WHEN INTERMEDIATE AND END DIAPHRAGMS REACH A COMPRESSIVE STRENGTH OF 3,000 PSI RELEASE EQUALIZING EQUIPMENT AND TEMPORARY BRACING AND PLACE CLOSURE POUR CONCRETE BETWEEN GIRDERS.
    - E. AFTER UHPC CLOSURE POUR HAS ATTAINED A MINIMUM COMPRESSIVE STRENGTH OF 10,000 PSI DIAMOND GRIND THE UHPC FLUSH WITH TOP OF GIRDER. GRINDING INCIDENTAL TO S501-40A.
    - F. SEE SHEET _ FOR STAGE CONSTRUCTION SEQUENCE.
11. SUBMIT PRECAST GIRDER SHOP DRAWINGS AT THE SAME TIME AS THE CURB MOUNT RAIL SHOP DRAWINGS.
12. PLACE GIRDERS PERPENDICULAR TO THE CROSS-SLOPE WHEN THE CROSS-SLOPE IS ≤ 4%.
13. PLACE PPC OVERLAY ON TOP OF DECK AND APPROACH SLABS IN ACCORDANCE WITH 551. PLACE FROM CURB TO CURB AND FROM BEGINNING OF APPROACH SLAB AT ABUTMENT 1 TO END OF APPROACH SLAB AT ABUTMENT 2, EXCEPT AT EXPANSION JOINTS AND SLEEPER BEAMS. ADJUST THE OVERLAY THICKNESS AS REQUIRED TO MATCH FINISH GRADE PROFILE. DETERMINE THE AMOUNT OF ADJUSTMENT BASED ON SURVEYED ELEVATIONS ALONG THE GIRDERS AND SUBMIT FOR APPROVAL.

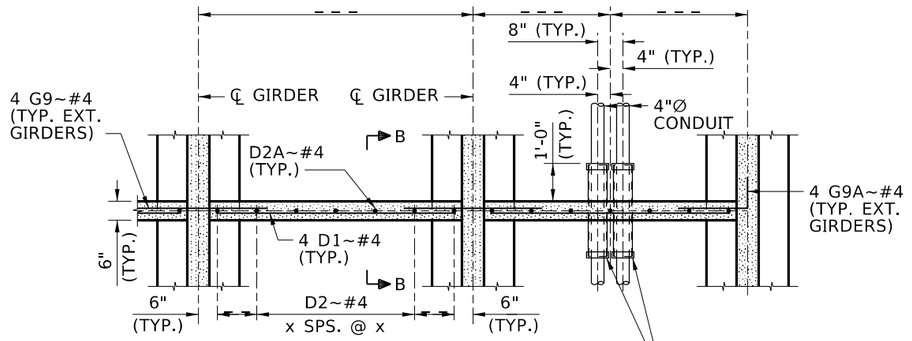

NOTE:
FIELD CUT BARS AS NECESSARY TO AVOID INTERFERENCE WITH PVC UTILITY CONDUIT SLEEVES.

SECTION A-A
¼"=1'-0"

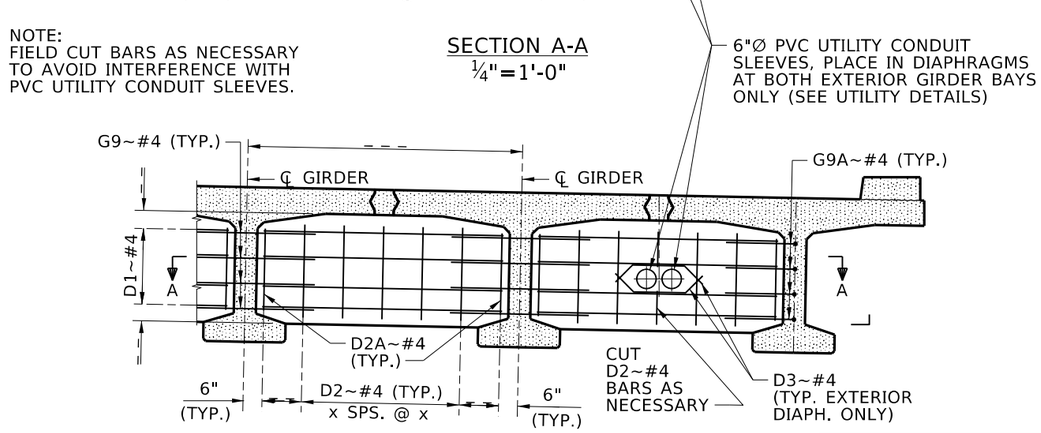

INTERMEDIATE DIAPHRAGM - ELEVATION
¼"=1'-0"

REVISIONS				DESIGNED	SCALES SHOWN ARE FOR 11" X 17" PRINTS ONLY	IDAHO TRANSPORTATION DEPARTMENT	ENGLISH	TYPICAL DECK BULB TEE SECTION AND DETAILS	BRIDGE PLANS
NO.	DATE	BY	DESCRIPTION	DESIGN CHECKED	CADD FILE NAME	YOUR Safety→YOUR Mobility→YOUR Economic Opportunity	PROJECT NO.		BRIDGE KEY NO.
				DETAILED	Standards/Bridge Standard Drawings/ B05_4D.DGN	APPROVED BY: BRIDGE ENGINEER MICHAEL T. JOHNSON DATE:		STATE SYSTEM	COUNTY / KEY NO.
				DWG. CHECKED	DRAWING DATE: OCT 2023			BRIDGE LRFD DESIGN MANUAL, B5.4D	BRIDGE DWG. NO. / SHEET OF
				CORRECTIONS					