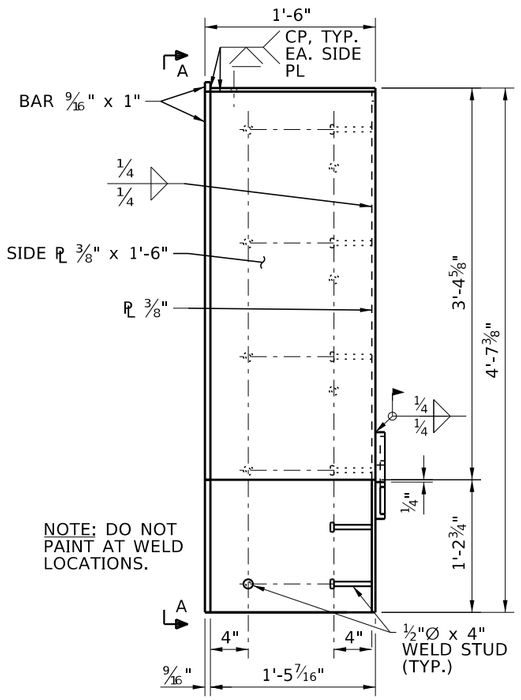

ELEVATION

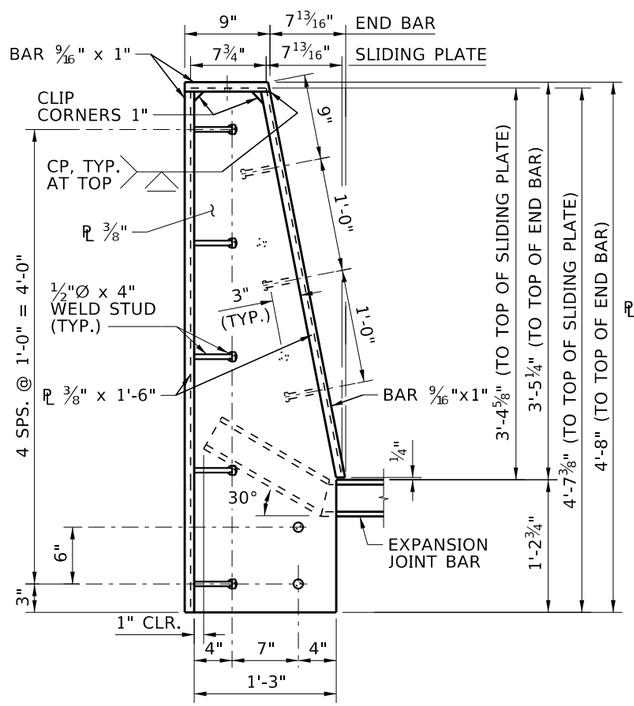

VIEW A-A

PANEL"A"
3/4"=1'-0"

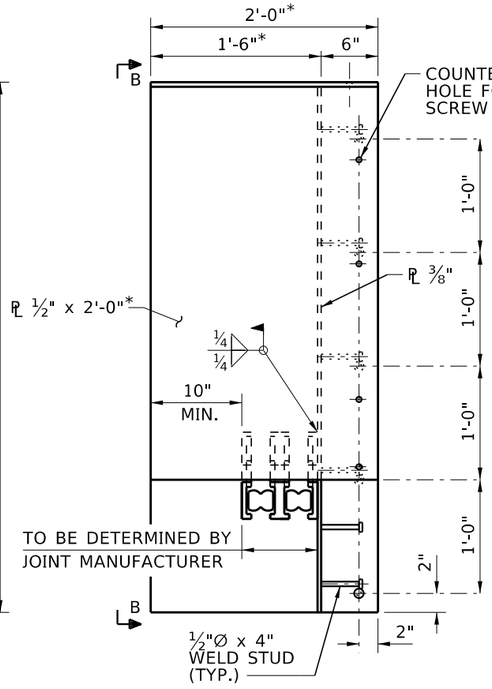

ELEVATION

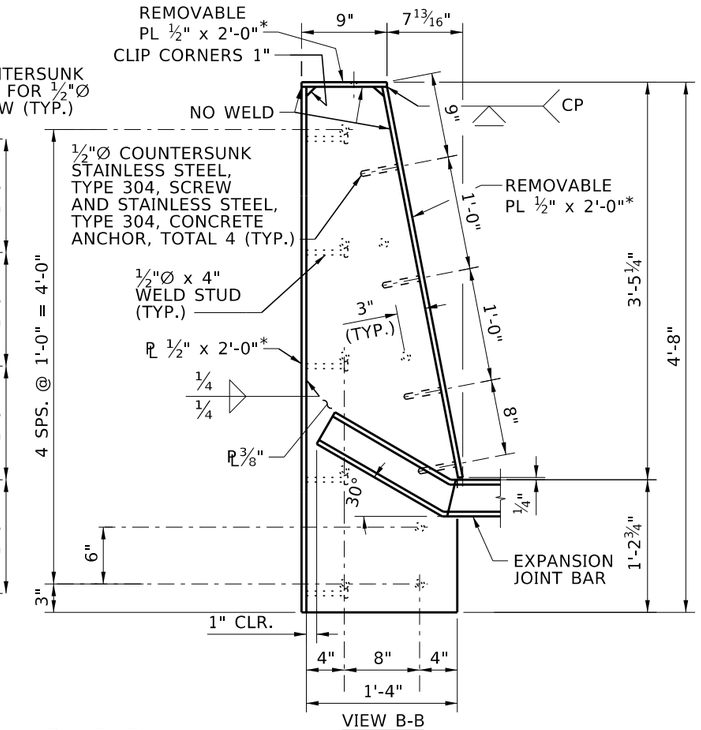

VIEW B-B

PANEL"B"
3/4"=1'-0"

*NOTE:
PLATE LENGTHS DETERMINED BASED ON TWO CELL MODULAR JOINT. CONTRACTOR TO VERIFY PLATE LENGTHS WITH SELECTED MODULAR JOINT.

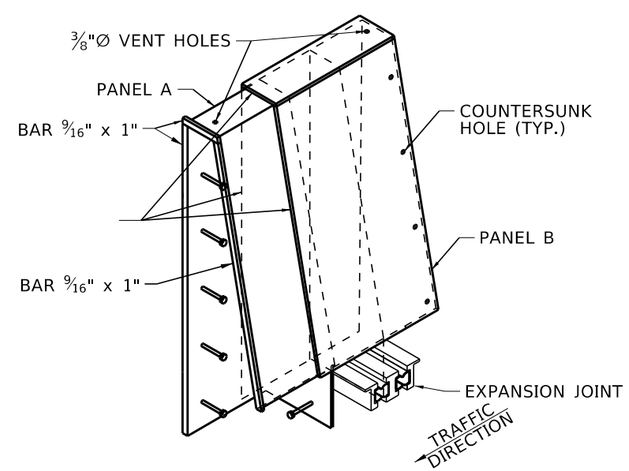

ASSEMBLED PARAPET EXPANSION JOINT
NTS

NOTES:

1. PROVIDE STEEL PLATES IN ACCORDANCE WITH ASTM A709 GRADE 36.
2. FOR DETAILS OF EXPANSION JOINT, SEE MODULAR EXPANSION JOINT SHEET.
3. PAINT METAL PARTS IN ACCORDANCE WITH 627 OF THE STANDARD SPECIFICATIONS USING PAINT SYSTEM A, EXCEPT THE COLOR OF THE FINAL COAT WILL BE COLOR 26492 (GRAY), AMS-STD-595.
4. SUBMIT SHOP DRAWINGS ELECTRONICALLY IN PDF FORMAT IN ACCORDANCE WITH 504 AND INCLUDE AN ERECTION DIAGRAM. CLEARLY SPECIFY MATERIALS BEING USED. SUBMIT ELECTRONIC AS-BUILT SHOP DRAWINGS IN PDF FORMAT BEFORE PROJECT COMPLETION.
5. PAYMENT FOR THE PARAPET COVER PLATE ASSEMBLY WILL BE INCLUDED IN THE UNIT PRICE FOR PAY ITEM S501-30A "MODULAR EXPANSION JOINT".

REVISIONS			
NO.	DATE	BY	DESCRIPTION

DESIGNED
DESIGN CHECKED
DETAILED
DWG. CHECKED
CORRECTIONS

SCALES SHOWN ARE FOR 11" X 17" PRINTS ONLY
CADD FILE NAME Standards/Bridge Standard Drawings/B14_4A.DGN
DRAWING DATE: OCT 2023

IDAHO TRANSPORTATION DEPARTMENT
YOUR Safety→YOUR Mobility→YOUR Economic Opportunity
APPROVED BY: BRIDGE ENGINEER MICHAEL T. JOHNSON DATE:

ENGLISH
PROJECT NO.

42" CONCRETE PARAPET COVER PLATES

BRIDGE LRFD DESIGN MANUAL, B14.4A

BRIDGE PLANS
BRIDGE KEY NO.
COUNTY | KEY NO.
BRIDGE DWG. NO. | SHEET OF