Invitation to Bid (ITB) B0000114

US 95 Sign Replacement

IDAHO TRANSPORTATION DEPARTMENT

Date of Issuance: 6/16/2016

TABLE OF CONTENTS

ADMINISTRATIVE INFORMATION **3**
1 PURPOSE **4**
2 GENERAL INFORMATION, SOLICITATION INSTRUCTIONS AND STANDARD TERMS AND CONDITIONS **4**
3 INQUIRIES **4**
4 SUBMISSION REQUIREMENTS **5**
4.1 REQUIRED BID SUBMISSION ITEMS 5
4.2 BID SUBMISSION METHODS 5
5 AWARD **5**
6 PRE-BID CONFERENCE **5**
7 BACKGROUND **6**
8 SCOPE OF WORK **6**
8.1 WORKSITE CLEANUP 7
8.2 WORK NOT NOTED, DETAILED, OR SPECIFIED 7
9 LOCATION **7**
10 QUANTITY **7**
11 COST **7**
12 ACCEPTANCE **7**
13 PAYMENT & BILLING **7**
14 CONTRACT MONITORING **8**
15 REPORTING REQUIREMENTS **8**
16 SURETY BOND REQUIREMENTS **8**
17 DRUG-FREE WORKPLACE PROGRAM **8**
18 LICENSING OF CONTRACTORS **8**
19 SUBCONTRACTORS **9**
20 COMPLIANCE WITH **9**
20.1 2012 ITD STANDARD SPECIFICATIONS FOR HIGHWAY CONSTRUCTION 9
20.2 ITD POLICY COMPLIANCE 9
21 RECORDS MAINTENANCE **9**
22 AUDIT RIGHTS **10**
23 INSURANCE REQUIREMENTS **10**
ATTACHMENT A- BID SCHEDULE **12**
ATTACHMENT B- AFFIDAVIT: DRUG FREE WORKPLACE PROGRAM **13**
ATTACHMENT C- SUBCONTRACTOR LICENSING **14**
ATTACHMENT D- SIGNATURE PAGE **15**

ADMINISTRATIVE INFORMATION

ITB Title:	US 95 Sign Replacement
ITB Project Description:	The Idaho Transportation Department (ITD) is requesting bids from qualified bidders for installation of a replacement overhead sign structure on US 95 at Milepost (MP) 312.58 in accordance with the plans and specifications contained herein.
ITB Lead:	Kathy Staab, Buyer Idaho Transportation Department PO BOX 837, 2600 Frontage Road Lewiston, Idaho 83501 Kathy.staab@itd.idaho.gov 208-799-4264
Submit sealed bid: BIDS MUST BE RECEIVED AT THE PHYSICAL ADDRESS DESIGNATED FOR COURIER SERVICE AND TIME/DATE STAMPED BY ITD PRIOR TO THE CLOSING DATE AND TIME.	Address for Courier Idaho Transportation Department 2600 Frontage Road Lewiston, Idaho 83501 Address for US Mail (if different) Idaho Transportation Department PO Box 837 Lewiston, Idaho 83501
Pre-Bid Conference: Pre-Bid Conference Location:	10:00 am. Pacific Time on June 27, 2016 ITD Conference Room 2600 Frontage Road Lewiston, Idaho 83501
Deadline To Receive Questions:	5:00 p.m. Pacific Time on July 5, 2016
ITB Closing Date:	5:00 p.m. Pacific Time on July 18, 2016
ITB Opening Date:	10:30 a.m. Pacific Time on July 19, 2016
Initial Term of Contract and Renewals (service completion):	The service performed under the contract will begin upon ITD's written notice to proceed and must be complete within 45 working days. Contractor must select a start date within 10 calendar days of notice to proceed.

1 PURPOSE

The Idaho Transportation Department (ITD) is requesting bids from qualified bidders for installation of a replacement overhead sign structure on US 95 at Milepost (MP) 312.58 in accordance with the plans and specifications contained herein.

2 GENERAL INFORMATION, SOLICITATION INSTRUCTIONS AND STANDARD TERMS AND CONDITIONS

This solicitation is issued by the Idaho Transportation Department via: (http://itd.idaho.gov/AdminServices/NonHwyConstructionProjects/bidding_info.htm). The Idaho Transportation Department is the only contact for this solicitation. All correspondence regarding this ITB must be in writing. In the event that it becomes necessary to revise any part of this ITB, addendums will be posted at the website provide above. It is the responsibility of the bidder to monitor this website for any updates or addendums. Any oral interpretations or clarifications of this ITB will not be relied upon. All changes to this ITB must be in writing and posted at to the website to be valid. Alternate bids are not allowed.

The current version of the Idaho Transportation Department, Business & Support Management Solicitation Terms and Conditions are incorporated by reference into this solicitation, and any resulting contract, as if set forth in their entirety. This document can be downloaded at http://itd.idaho.gov/AdminServices/NonHwyConstructionProjects/PDFS/ITD%20BSM%20Solicitation%20Terms%20and%20Conditions%20July%202015.pdf; or copies obtained by contacting the solicitation's lead (see **Section 3**, Inquiries). Failure by any submitting bidder to obtain a copy of these documents will in no way constitute or be deemed a waiver by ITD of any term, condition, or requirement contained in the referenced documents; and no liability will be assumed by ITD for a submitting bidder's failure to consider the Idaho Transportation Department, Business & Support Management Solicitation Terms and Conditions in preparing its response to the solicitation.

3 INQUIRIES

Questions or other correspondence must be submitted in writing to the ITD contact listed below. **QUESTIONS MUST BE RECEIVED BY 5:00 PM Pacific Time (MT) ON THE DATE LISTED IN THE ADMINISTRATIVE INFORMATION PAGE.** Timely received written questions will be answered via an addendum which will be posted to http://itd.idaho.gov/AdminServices/NonHwyConstructionProjects/bidding_info.htm.

ITB Lead: Kathy Staab, Buyer
Phone: 208-799-4264
Fax: 208-799-4302
E-mail: d2.supply@itd.idaho.gov

Any questions regarding the Idaho Transportation Department, Business & Support Management Solicitation Terms and Conditions must also be submitted in writing, by the deadline identified in this subsection. ITD will not consider proposed modifications to these requirements after the date and time set for receiving questions. Questions regarding these requirements must contain the following:

1. The rationale for the specific requirement being unacceptable to the party submitting the question (define the deficiency);
2. Recommended verbiage for ITD's consideration that is consistent in content, context, and form with ITD's requirement that is being questioned;
3. Explanation of how ITD's acceptance of the recommended verbiage is fair and equitable to both ITD and to the party submitting the question.

Bids which condition the bid based upon ITD accepting other terms and conditions not found in the ITB, or which take exception to ITD's terms and conditions, will be found non-responsive, and no further consideration of the bid will be given.

4 SUBMISSION REQUIREMENTS

4.1 Required Bid Submission Items

Your bid submission must consist of the following:

4.1.1 Bid Schedule (Attachment A)
4.1.2 Affidavit: Drug Free Workplace Program (Attachment B)
4.1.3 Subcontractor Licensing – if applicable (Attachment C)
4.1.4 Signature Page (Attachment D)

4.2 Bid Submission Methods

Bids must be submitted manually (via U.S. Mail, courier/hand-delivery) in a sealed envelope/package. Do not fax or e-mail your bid. Your bid must be received at the location and by the date and time specified on the ITB Administrative Information Page. The official time, for bid closing purposes, is ITD's time clock. Alternate bids will not be allowed.

4.2.1 Submission Method Requirements

Seal all required bid submission items in a single envelope or package (be certain to include an original hand-written signature in ink OR an electronic digital I.D. on the Signature Page) and label the outside of the package as follows:

Attn: Kathy Staab, Buyer, Idaho Transportation Department
Bidder Name: (Company Name)
ITB Number: B0000114
ITB Title: US 95 SIGN REPLACEMENT
ITB Closing Date:

Bidders must provide one (1) original copy of their bid.

5 AWARD

Award will be made, all or none, to the responsive, responsible bidder with the lowest Total Cost, as provided on **Attachment A**, Bid Schedule.

6 PRE-BID CONFERENCE

All interested parties may attend the optional pre-bid conference, at their expense. Parties interested in attending this conference should notify (in writing) the ITB Lead no later than one (1) business day prior to the date of the pre-bid conference. The written request should specify the name and title of each person who will be attending. A maximum of three (3) persons for each party interested will be allowed to attend in-person.

Interested parties may also attend the pre-bid conference via teleconference by obtaining conference call-in details from the ITB Lead.

Failure to attend the optional pre-bid conference will not relieve the bidder of meeting the requirements of this ITB.

7 BACKGROUND

The previous sign bridge was damaged beyond repair by a dump truck. Project is to remove old structure and install new sign and sign bridge with foundation with additional overhead clearance.

8 SCOPE OF WORK

Scope of work as generally described here in and as described in **Attachments E & F** (Traffic Control Plans & Sign Structure Plans)**.**

8.1 Removal of existing sign structure, signs, and foundations – Remove the existing sign structure, and sign panels. Cut off the existing concrete foundation in the median flush with surrounding pavement. Remove any remaining loose attachment pieces at existing rock face support.

8.2 Material can be wasted at Turkey Island at US-12 MP 14.5 or other approved location. Signs, sign bridge support and sign bridge structure will become property of the Contractor. Contractor is responsible for proper disposal of all materials. There is an estimated 24,600 lbs. of steel. Consider the existing steel to have lead-based paint and handle accordingly. Lead testing results for existing sign structure are provided by ITD, **Attachment H.**

8.3 Existing Traffic Attenuator – Remove and reset the existing attenuator to the extent required for removal of the existing concrete foundation in the median.

8.4 New overhead sign structure – Design, fabricate, and install the new overhead monotube sign structure, including foundations at the location shown on the plans. Install new sign panels. Sign panels will be provided by ITD. All sign attachment accessories are incidental to the work. Work will include rock chipping and/or excavation to the extent required for installation of foundation and sign structure adjacent to existing rock face. Foundation adjacent to existing rock face must be flush with ground surface. Foundation in the median to incorporated into the cast in place median barrier transition piece.

8.5 Design new overhead sign structure and foundations in accordance with ITD Standard Specifications and the January 2016 Supplemental Specifications, Section 616.
http://itd.idaho.gov/manuals/Manual%20Production/SpecBook/SpecHome.htm

8.6 Included is a Materials Report for foundation design, **Attachment G**.

8.7 Median Barrier – Remove existing precast concrete median barrier sections to the extent required to allow for construction of a new cast in place concrete median barrier transition piece. Reset and attach existing precast barrier sections to cast in place transition piece to form one continuous length of median barrier. Extra precast barrier sections not required in the completed work must be delivered to ITD District 2.

8.8 Traffic Control - Contractor will provide all traffic control as detailed in **Attachment E**. Contractor may accept ITD Traffic Control Plan or submit an alternate Traffic Control Plan. Alternate plan must be approved by ITD Engineer. Traffic is not allowed to pass under a suspended load.

8.9 Other requirements - Lane closures must be kept at a minimum. The southbound lanes may be closed for one, thirty (30) minute period for new sign structure installation between 4:30 am and 6:00 am on a Saturday or a Sunday, or as approved by the ITD Engineer. Road closure must be located near the Port of Entry at the top of the hill. Notify Engineer 5 days in advance before road closure.

8.10 Contractor must contact Ted Boyle with Avista at (509) 798-1473 one week prior to installing the sign structure due to overhead power lines.

9 WORKSITE CLEANUP

The Contractor must keep work areas free of waste materials. Upon completion of work, all waste, tools, supplies, and materials must be removed from ITD's premises.

10 WORK NOT NOTED, DETAILED, OR SPECIFIED

All work required for complete installation or assembly must be included in the bid. Where minor portions of required work are not noted, detailed, or specified, such work must be done in accordance with proven construction practice or accepted industry standards at no additional cost to ITD. The Contractor will be held responsible for verification of existing job conditions prior to bid; no additional cost will be awarded to the Contractor for failure to verify existing field conditions. Discrepancies or questions arising between actual field conditions and contract documents must be submitted in accordance with **Section 3**, Inquiries.

11 LOCATION

Installation is on the Lewiston Hill, US 95 at Milepost 312.58±, southbound lane.

12 QUANTITY

Only sign panels will be provided by ITD. All other attachment pieces are incidental. The exercise of control over State-owned material by a Contractor who is improving real property (roadways, etc.) will incur the imposition of a use tax.

Rules governing use tax may be found on the Web at IDAPA35.01.02 at the following address: http://adminrules.idaho.gov/rules/2012/35/0102.pdf

13 COST

Provide your fully burdened Total Cost on **Attachment A**, Bid Schedule.

14 ACCEPTANCE

Final acceptance will be made following the complete installation of the sign structure, signs, and all associated materials. Inspection will be made by ITD Engineer or their designee.

15 PAYMENT & BILLING

The Contractor must submit invoices to the ITD billing location provided below, for the quantity delivered and accepted. ITD will render payment for a properly executed invoice NET thirty (30) days from the date of the invoice, for pay items accepted by ITD.

Invoices must include the following information:

- Contract Number (and name of project/product, if appropriate)
- Identification of Billing Period.
- Total amount billed for the billing period.
- Detailed description of services/products provided and associated # of hours/$ amounts, as appropriate.
- Name of authorized individual/contact information for Contractor

Invoices must be submitted to:

Idaho Transportation Department
Attn: Kathy Staab, Buyer
PO Box 837
Lewiston, Idaho 83501

Electronic Invoicing may be sent to: d2.supply@itd.idaho.gov

16 CONTRACT MONITORING

If a formal and written complaint is registered with the Contractor in respect to unsatisfactory work performance, the Contractor will have seventy-two (72) hours in which to respond in person to the complaint, to remedy the problem(s). Failure to respond in the prescribed time to the complaint or to remedy the problem may result in termination of the contract as provided in the Idaho Transportation Department, Business & Support Management Solicitation Terms and Conditions.

If ITD is not satisfied with the results and remediation of the complaint, periodic and joint inspections with the Contractor may be required to discuss and point out Contractors violations. Failure of the Contractor to attend these inspections may result in termination of the contract.

17 REPORTING REQUIREMENTS

Reporting requirements must follow the *2012 ITD Standard Specification for Highway Construction* & the *January 2016 Supplemental Specifications, Section 616.*

18 SURETY BOND REQUIREMENTS

The apparent successful bidder must furnish a performance bond and a payment bond each in the amount of the contract, within fifteen (15) calendar days upon receipt of the contract from ITD.

Performance and Payment Bonds must be submitted on the most current version of The American Institute of Architects (AIA) Document 312, signed by the bidder and their surety company. Power of Attorney for the person who executes the bond on behalf of the surety as Attorney-In-Fact must accompany the bonds. Guarantees submitted via any other obligation will NOT be accepted.

The Bonding Surety must be registered and licensed with the Idaho Department of Insurance. Performance and Payment bonds will not be accepted if the Surety is not registered and licensed in Idaho, and the contract will not be executed by ITD.

19 DRUG-FREE WORKPLACE PROGRAM

Bidders must submit an affidavit (see **Attachment B**), certifying compliance with Section 72-1717, Idaho Code, requiring the Contractor and its subcontractors at the time of bid to provide a drug-free workplace program and to maintain such program throughout the duration of the Contract.

20 LICENSING OF CONTRACTORS

The Contractor, and any subcontractors, must possess the appropriate public works contractor license in accordance with Title 54, Chapter 19, Idaho Code, as amended.

The Contractor, and any subcontractors required to be listed in the bid proposal must possess the license by the date and time of bid submission.

21 SUBCONTRACTORS

The Contractor cannot sublet, sell, transfer, assign, or otherwise dispose of the contract or any portion of the contract, or the right, title, or interest in the contract without the ITD's written consent. If ITD consents to subletting a portion of the work, the Contractor must use its own organization to perform work amounting to at least thirty percent (30%) of the original contract amount.

If subcontracting is proposed, the bidder must complete **Attachment C**, Subcontractor Licensing, giving the name, address, and Public Works Contractors License Number for any and all companies who will, in the event the bidder secures the contract, complete the plumbing, electrical, or HVAC work under the contract in accordance with Section 67-2310, Idaho Code.

Companies must possess an appropriate Idaho Public Works Contractors License issued by the State of Idaho Public Works Contractors State License Board covering the contract work classification in which they are named.

Note: Section 67-2310, Idaho Code, also states "No general contractor will name any subcontractor in his bid unless the general contractor has received communication from the subcontractor."

22 COMPLIANCE WITH

22.1 2012 ITD Standard Specifications for Highway Construction

The 2012 ITD Standard Specification for Highway Construction and the most current Quality Assurance Manual are incorporated by reference where applicable to this solicitation.

The 2012 ITD Standard Specification for Highway Construction is available for $30.00 plus tax. Contact ITD at 334-8430 to purchase, or visit: http://itd.idaho.gov/manuals/ManualsOnline.htm, to download both the 2012 ITD Standard Specification for Highway Construction and the Quality Assurance Manual.

22.2 ITD Policy Compliance

The following ITD policies apply to this contract when the Contractor is performing work at an ITD facility or when using ITD equipment or other property. These policies will remain in force for the duration of the contract:

5055	Harassment in the Workplace policy
5523	Alcohol and Drug-free Workplace policy
5510	Computer, E-Mail, and Internet Usage policy
5033	Workplace Violence Policy

These policies are provided at: http://itd.idaho.gov/AdminServices/NonHwyConstructionProjects/PDFS/ITD%20Policy%20Compliance%20Dec%202015.pdf,and incorporated in this agreement. It is the Contractor's responsibility to read, understand and comply with these policies; one hundred percent (100%) compliance is mandatory. Furthermore, Contractor is responsible for ensuring that all their employees and subcontractors adhere to these policies. ITD reserves the right to remove from its premises, at any time, any Contractor or his/her employee or subcontractor that fails to follow these policies. ITD also reserves the right to remove its property, at any time, from any Contractor or his/her employee or subcontractor that fails to follow these policies.

All Contractor's employees and subcontractors are required to wear identification badges at all times while on the ITD's premises. The Contractor and its employees or subcontractors are not employees of ITD, but ITD retains the right to control its own work place and the use of its property.

23 RECORDS MAINTENANCE

The Contractor must maintain or supervise the maintenance of all records necessary to properly account for all payments made to the Contractor pursuant to the Contract. These records must be retained by the Contractor

for at least three (3) years after the Contract terminates, or until all audits initiated within the three (3) years have been completed, whichever is later.

24 AUDIT RIGHTS

The Contractor agrees to allow State and Federal auditors and ITD purchasing staff access to all the records relating to this Contract, for audit, inspection, and monitoring of services or performance. Such access will be during normal business hours or by appointment.

25 INSURANCE REQUIREMENTS

Within fifteen (15) calendar days of notification of award (or such other time as designated by the Purchasing Activity), the apparent successful bidder must provide certificates of insurance required herein and must maintain the insurance during the life of the Contract. There are no provisions for exceptions to this requirement. Failure to provide the certificates of insurance within the fifteen (15) calendar day period may be cause for your bid to be declared non-responsive or for your contract to be cancelled.

The Contractor must carry liability and property damage insurance that will protect it and the State of Idaho from claims for damages for bodily injury, including accidental death, as well as for claims for property damages, which may arise from operations under the Contract whether such operations be by themselves or by anyone directly or indirectly employed by either of them.

The Contractor cannot commence work under the Contract until it obtains all insurance required under this provision and furnishes a certificate or other form showing proof of current coverage to the State. All insurance policies and certificates must be signed copies. After work commences, the Contractor must keep in force all required insurance until the contract is terminated.

1.1 Commercial General and Umbrella Liability Insurance. Contractor must maintain Commercial General Liability (CGL) and, if necessary, Commercial Umbrella insurance with a limit of not less than $1,000,000 each occurrence. If such CGL insurance contains a general aggregate limit, it must apply separately to this Contract.

1.1.1 CGL insurance must be written on ISO occurrence form CG 00 01 (or a substitute form providing equivalent coverage) and must cover liability arising from premises, operations, independent contractors, products-completed operations, personal and advertising injury, and liability assumed under an insured contract (including the tort liability of another assumed in a business contract).

1.2 Commercial Automobile and Commercial Umbrella Liability Insurance. The Contractor must maintain Commercial Automobile Liability and, if necessary, Commercial Umbrella Liability insurance with a limit of not less than $1,000,000 each accident. Such insurance must cover liability arising out of any auto (including owned, hired, and non-owned autos).

1.2.1 Bidders may request a waiver from providing Commercial Automobile and Commercial Umbrella Liability Insurance in its bid if the bidder will not use any owned, hired or non-owned vehicles to conduct business under the contract, if it is awarded the contract, and the State of Idaho will consider the request. If the bidder submits a request to waive the provision of Commercial Automobile and Commercial Umbrella Liability Insurance after the due date and time for receipt of bids or proposals, the State of Idaho may not consider the request.

1.3 Workers Compensation Insurance and Employer's Liability. The Contractor must maintain workers compensation and employer's liability. The employer's liability must have limits not less than $500,000 each accident for bodily insurance by accident or $500,000 each employee for bodily injury by disease.

1.3.1 The Contractor must provide either a certificate of workers compensation insurance issued by a surety licensed to write workers compensation insurance in the State of Idaho, as evidence that the Contractor has in

effect a current Idaho workers compensation insurance policy, or an extraterritorial certificate approved by the Idaho Industrial Commission from a state that has a current reciprocity agreement with the Idaho Industrial Commission.

1.4 State of Idaho as Additional Insured: The liability insurance coverage required for performance of the Contract must include the State of Idaho, the (agency) and its divisions, officers and employees as additional insured, but only with respect to the Contractor's activities to be performed under this Contract.

1.4.1 The Contractor must provide proof of the State of Idaho, the (agency) and its divisions, officers and employees being additional insured by providing endorsements to the liability insurance policies showing the State of Idaho, the (agency) and its divisions, officers and employees as additional insured. The endorsements must also show the policy numbers and the policy effective dates.

1.4.2 If a liability insurance policy provides for automatically endorsing additional insured when required by contract, then, in that case, the Contractor must provide proof of the State of Idaho, the (agency) and its divisions, officers and employees being additional insured by providing copies of the policy pages that clearly identify the blanket endorsement.

1.5 Notice of Cancellation or Change: The Contractor must ensure that should any of the above described policies be cancelled before the expiration date thereof, or if there is a material change, potential exhaustion of aggregate limits or intent not to renew insurance coverage(s), that written notice will be delivered to the ITD in accordance with the policy provisions.

1.6 The Contractor must further ensure that all policies of insurance are endorsed to read that any failure to comply with the reporting provisions of this insurance, except for the potential exhaustion of aggregate limits, will not affect the coverage(s) provided to the State of Idaho, and its divisions, officers and employees.

1.7 Acceptable Insurers and Deductibles: Insurance coverage required under the Contract must be obtained from insurers rated A-VII or better in the latest Bests Rating Guide and in good standing and authorized to transact business in Idaho. The Contractor must be financially responsible for all deductibles, self-insured retention's and/or self-insurance included hereunder. The coverage provided by such policy will be primary to any coverage of the State on or related to the contract and must provide that the insurance afforded applies separately to each insured against whom a claim is made, except with respect to the limitation of liability.

Waiver of Subrogation: All policies must contain waivers of subrogation. The Contractor waives all rights against the State and its officers, employees, and agents for recovery of damages to the extent these damages are covered by the required policies. Policies may contain deductibles but such deductibles will not be deducted from any damages due to the State.

ATTACHMENT A- BID SCHEDULE

ITB B0000114 US 95 SIGN REPLACEMENT

Company Name of Bidder: _____

Contact Name/Phone: _____

Contact E-mail: _____

Provide your fully burdened Total Cost for providing the US 95 SIGN REPLACMENT specified in this solicitation:

ITEM	DESCRIPTION	QTY	UM	UNIT PRICE	EXTENDED PRICE
1	INSTALLATION OF SIGN, US 95 MP 312.58	1	LS	$_____	$_____
				TOTAL COST	$_____

<u>THIS ATTACHMENT MUST BE COMPLETED AND RETURNED WITH RESPONSE</u>

ATTACHMENT B- AFFIDAVIT: DRUG FREE WORKPLACE PROGRAM

ITB B0000114 US 95 SIGN REPLACEMENT

STATE OF _____

COUNTY OF _____

The undersigned being duly sworn upon oath deposes and says that _____
(Contractor Name)

complies with the provisions of Section 72-1717 Idaho Code (Drug Free Workplace program); that

_____provides a drug-free workplace program that complies with the
(Contractor Name)

provisions of Idaho Code, Title 72, Chapter 17 and will maintain such program throughout the life this contract

and that _____ will subcontract work only to
(Contractor Name)

subcontractors meeting the requirements of Idaho Code, section 72-1717(1)(a).

_____
Name of Contractor

_____
Address

_____
City and State

By: _____
(Signature)

Subscribed and sworn to before me this _____ day of _____, in the year _____.
Commission expires: _____

_____
NOTARY PUBLIC, residing at

_____

_____

<u>THIS ATTACHMENT MUST BE COMPLETED AND RETURNED WITH RESPONSE</u>

ATTACHMENT C- SUBCONTRACTOR LICENSING

ITB B0000114 US 95 SIGN REPLACEMENT

Provide the names, addresses, public works contractor license numbers, and contract amounts of the Contractor or Subcontractor(s) who will do the plumbing, electrical, or HVAC work under the contract.

A. ***Plumbing work by****: _____ residing at:*

_____, whose Idaho Public Works Contractors License No. is: _____,

whose State Plumbing Bureau License No. is: _____. Amount: $_____

B. ***Electrical work by****: _____ residing at:*

_____, whose Idaho Public Works Contractors License No. is: _____,

whose State Electrical Bureau License No. is: _____. Amount: $_____

C. ***HVAC work by****: _____ residing at:*

_____, whose Idaho Public Works Contractors License No. is: _____,

whose HVAC License No. is: _____. Amount: $_____

THIS ATTACHMENT MUST BE COMPLETED AND RETURNED WITH RESPONSE *IF* SUBCONTRACTING

ATTACHMENT D- SIGNATURE PAGE

Idaho Transportation Department
PO Box 837
2600 Frontage Road
Lewiston, Idaho 83501

SIGNATURE PAGE for Use with a Submitted ITB Response

Bids and pricing information must be typewritten or handwritten in ink. Originals and copies of the bid must be submitted in accordance with the solicitation documents. Submitted bids must include this signature page with the ORIGINAL signature (ink or electronic digital I.D.) of an individual authorized to bind of the submitting bidder.

NO LIABILITY WILL BE ASSUMED BY THE IDAHO TRANSPORTATION DEPARTMENT FOR A BIDDER'S FAILURE TO OBTAIN THE TERMS AND CONDITIONS AND ANY PROPERLY ISSUED SOLICITATION ADDENDUMS IN A TIMELY MANNER FOR USE IN THE BIDDER'S RESPONSE TO THIS SOLICITATION OR ANY OTHER FAILURE BY THE BIDDER TO CONSIDER THE TERMS, CONDITIONS, AND ANY ADDENDUMS IN THE BIDDER'S RESPONSE TO THE SOLICITATION.

Send your sealed bid package to:

Idaho Transportation Department
ATTN: Kathy Staab, Buyer
PO Box 837
Lewiston, Idaho 83501

OR

FedEx, UPS, or other Couriers:

Idaho Transportation Department
ATTN: Kathy Staab, Buyer
2600 Frontage Road
Lewiston, Idaho 83501

This ITB or IBR response is submitted in accordance with all documents and provisions of the specified Bid Number and Title detailed below. By my signature below I accept the terms, conditions, and requirements contained in the solicitation in effect at the time this ITB or IBR was issued, as incorporated by reference into this solicitation. As the undersigned I certify I am authorized to sign and submit this response for the named bidder. I further acknowledge I am responsible for reviewing and acknowledging any addendums that have been issued for this solicitation.

Bid Number: ITB B0000114 Bid Title: US 95 SIGN REPLACEMENT

Bidder (Company Name): _____

ADDRESS: _____

CITY, ST, ZIP: _____

PHONE: _____ FAX: _____ EMAIL: _____

PUBLIC WORKS LICENSE NO:_____ FEIN:_____

THIS SIGNATURE PAGE MUST BE SIGNED WITH AN ORIGINAL HANDWRITTEN SIGNATURE (PREFERABLY IN BLUE INK) OR AN ELECTRONIC DIGITAL I.D., AND RETURNED WITH YOUR BID FOR YOUR BID TO BE CONSIDERED.

_____ _____
Original Signature (in ink or electronic digital I.D.) Date

_____ _____
Printed Name Title

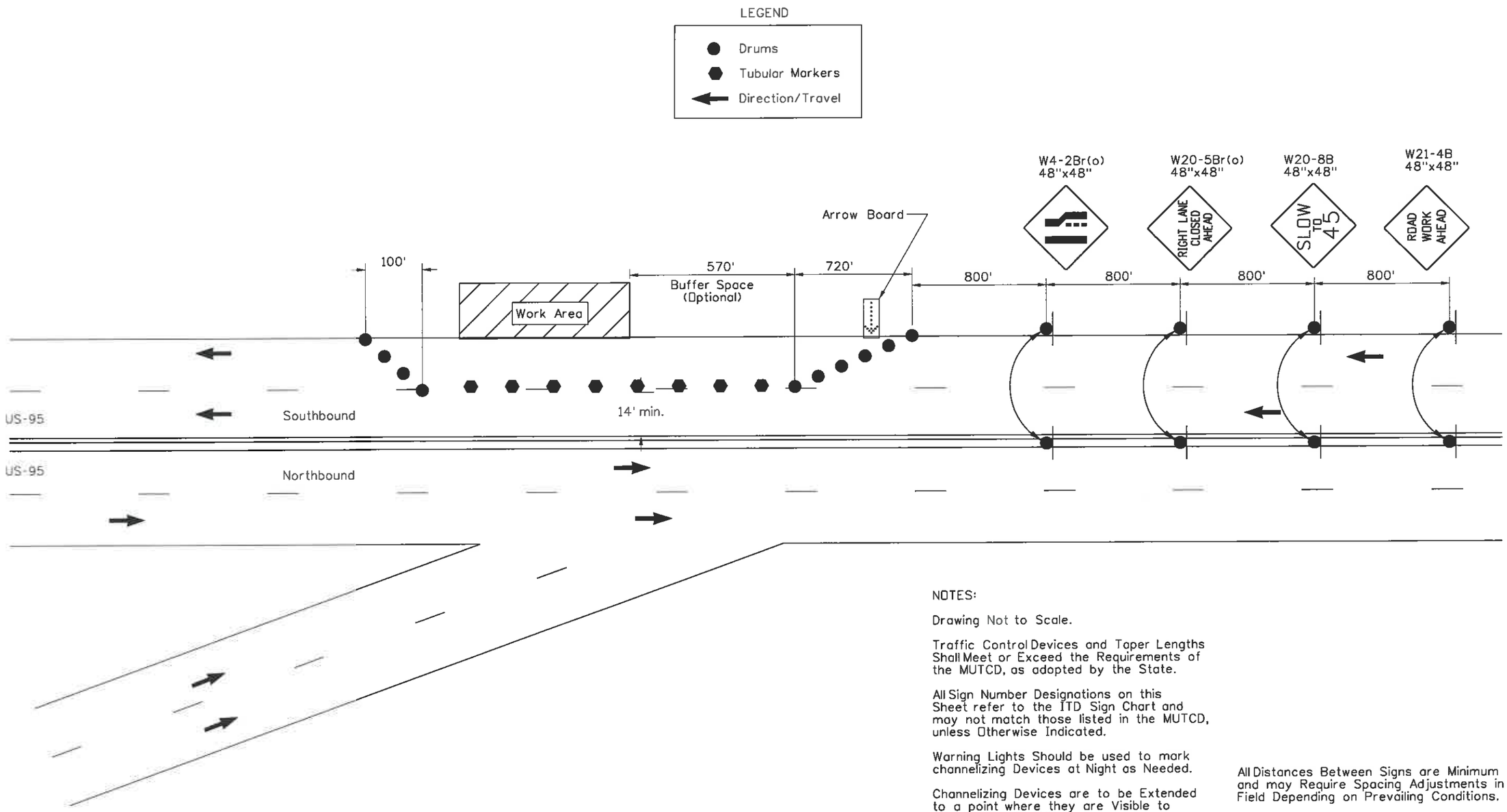

NOTES:

Drawing Not to Scale.

Traffic Control Devices and Taper Lengths Shall Meet or Exceed the Requirements of the MUTCD, as adopted by the State.

All Sign Number Designations on this Sheet refer to the ITD Sign Chart and may not match those listed in the MUTCD, unless Otherwise Indicated.

Warning Lights Should be used to mark channelizing Devices at Night as Needed.

Channelizing Devices are to be Extended to a point where they are Visible to Approaching Traffic.

Contractor shall Cover or Remove all Conflicting Highway Signing While Traffic Control is in Place.

All Distances Between Signs are Minimum and may Require Spacing Adjustments in the Field Depending on Prevailing Conditions.

Additional Signing May be Required as Directed by the Engineer.

REVISIONS			
NO.	DATE	BY	DESCRIPTION

DESIGNED P. Frei	SCALES SHOWN ARE FOR 11" X 17" PRINTS ONLY	IDAHO TRANSPORTATION DEPARTMENT
DESIGN CHECKED J. Hopkins		
DETAILED P. Frei	CADD FILE NAME 19775_trcp_001.DGN	
DRAWING CHECKED J. Hopkins	DRAWING DATE: MAY 2016	District 2 - Lewiston, ID

PROJECT NO.	TEMPORARY TRAFFIC CONTROL PLAN	English
A019(775)	D2 SIGN BRIDGE REPLACEMENT US-95	COUNTY NEZ PERCE
		KEY NUMBER 19775
		SHEET 1 OF 4

PROFESSIONAL ENGINEER LICENSED P-15560 STATE OF IDAHO JARED M. HOPKINS
Jared M. Hopkins 6-6-2016

NOTES:

Drawing Not to Scale.

Traffic Control Devices and Taper Lengths Shall Meet or Exceed the Requirements of the MUTCD, as adopted by the State.

All Sign Number Designations on this Sheet refer to the ITD Sign Chart and may not match those listed in the MUTCD, unless Otherwise Indicated.

Warning Lights Should be used to mark channelizing Devices at Night as Needed.

Channelizing Devices are to be Extended to a point where they are Visible to Approaching Traffic.

Contractor shall Cover or Remove all Conflicting Highway Signing While Traffic Control is in Place.

All Distances Between Signs are Minimum and may Require Spacing Adjustments in the Field Depending on Prevailing Conditions.

Additional Signing May be Required as Directed by the Engineer.

LEGEND

- Drums
- Tubular Markers
- Direction/Travel

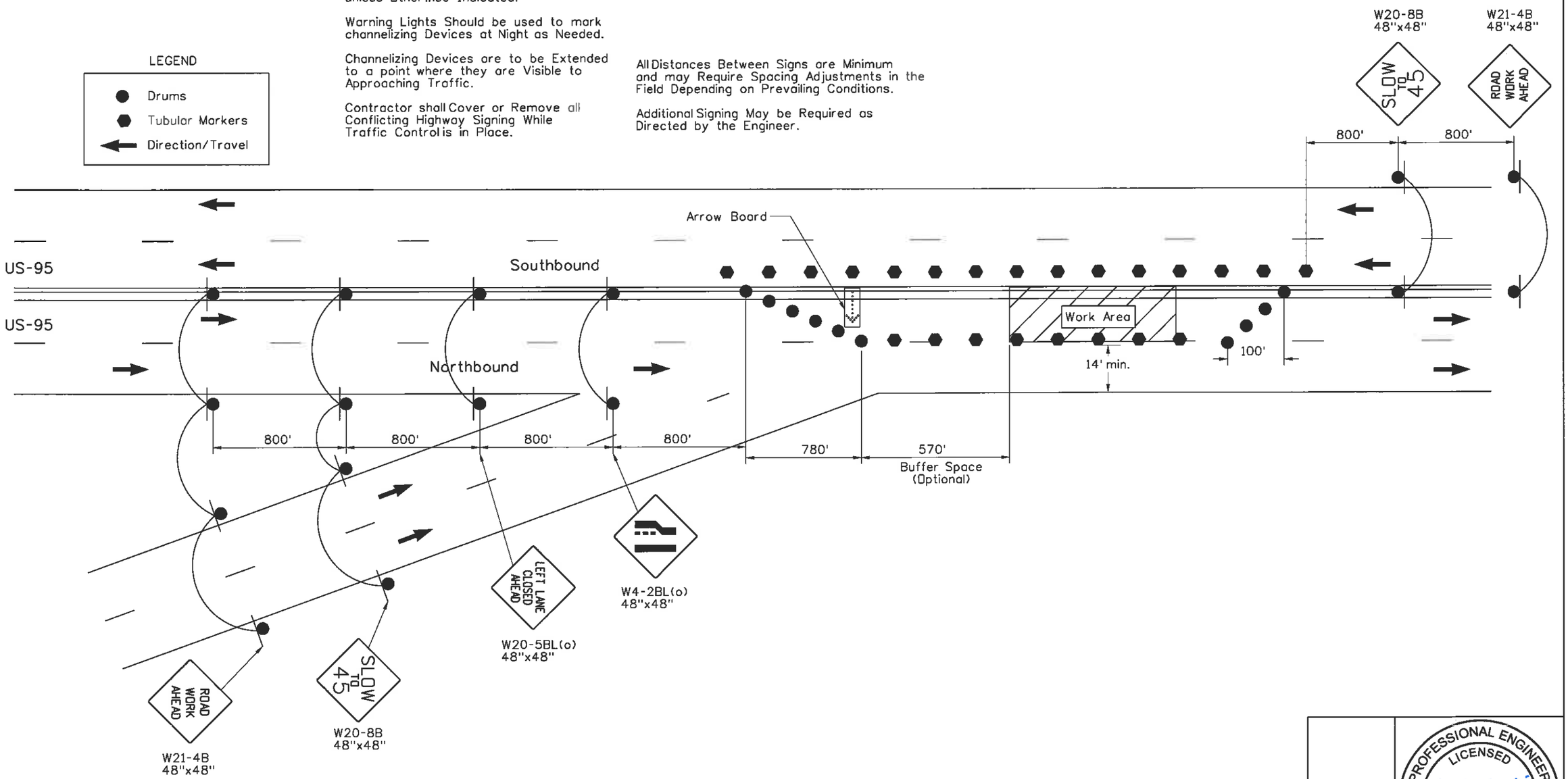

REVISIONS			
NO.	DATE	BY	DESCRIPTION

DESIGNED P. Frei	SCALES SHOWN ARE FOR 11" X 17" PRINTS ONLY	IDAHO TRANSPORTATION DEPARTMENT
DESIGN CHECKED J. Hopkins		District 2 - Lewiston, ID
DETAILED P. Frei	CADD FILE NAME 19775_trcp_002.DGN	
DRAWING CHECKED J. Hopkins	DRAWING DATE: MAY 2016	

PROJECT NO.	TEMPORARY TRAFFIC CONTROL PLAN	English
A019(775)	D2 SIGN BRIDGE REPLACEMENT US-95	COUNTY NEZ PERCE
		KEY NUMBER 19775
		SHEET 2 OF 4

PROFESSIONAL ENGINEER LICENSED P-15560 6-6-2016 STATE OF IDAHO JARED M. HOPKINS

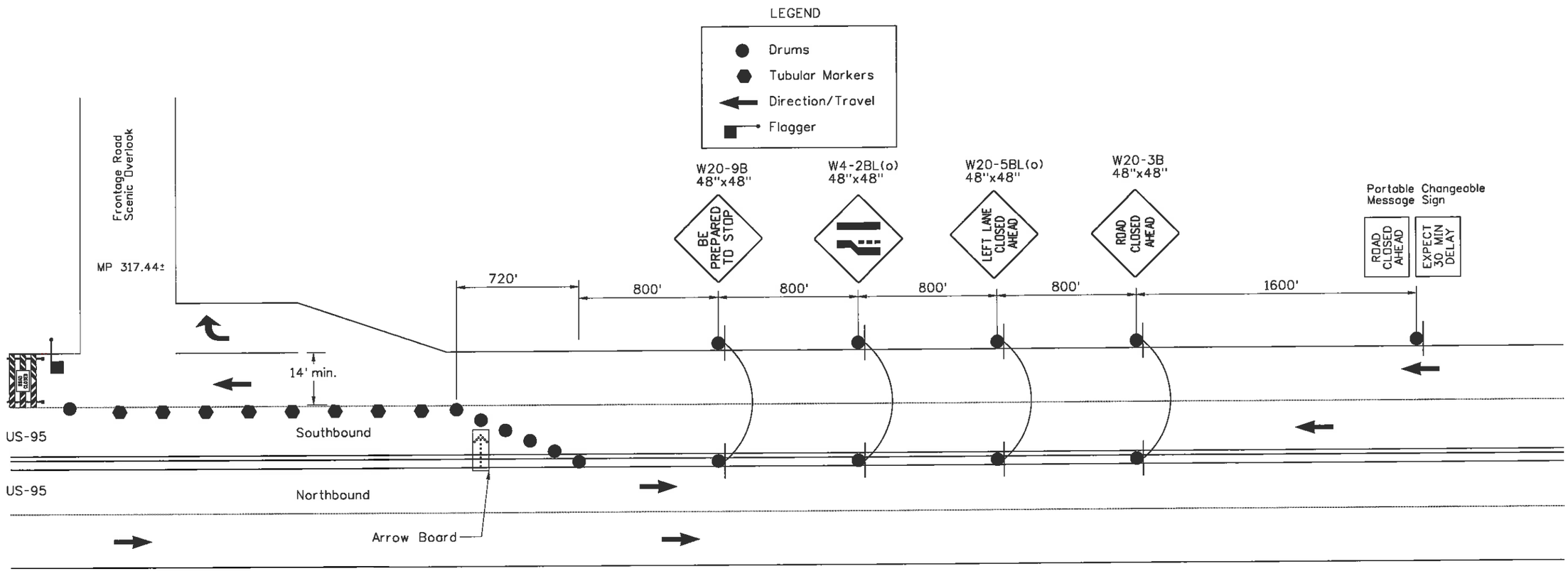

NOTES:

Drawing Not to Scale.

Traffic Control Devices and Taper Lengths Shall Meet or Exceed the Requirements of the MUTCD, as adopted by the State.

All Sign Number Designations on this Sheet refer to the ITD Sign Chart and may not match those listed in the MUTCD, unless Otherwise Indicated.

Warning Lights Should be used to mark channelizing Devices at Night as Needed.

Channelizing Devices are to be Extended to a point where they are Visible to Approaching Traffic.

Contractor shall Cover or Remove all Conflicting Highway Signing While Traffic Control is in Place.

All Distances Between Signs are Minimum and may Require Spacing Adjustments in the Field Depending on Prevailing Conditions.

Additional Signing May be Required as Directed by the Engineer.

REVISIONS			
NO.	DATE	BY	DESCRIPTION

DESIGNED P. Frei	SCALES SHOWN ARE FOR 11" X 17" PRINTS ONLY	IDAHO TRANSPORTATION DEPARTMENT
DESIGN CHECKED J. Hopkins		
DETAILED P. Frei	CADD FILE NAME 19775_trcp_003.DGN	
DRAWING CHECKED J. Hopkins	DRAWING DATE: MAY 2016	District 2 - Lewiston, ID

PROJECT NO.
A019(775)

TEMPORARY TRAFFIC CONTROL PLAN

D2 SIGN BRIDGE REPLACEMENT US-95

English

COUNTY NEZ PERCE
KEY NUMBER 19775
SHEET 3 OF 4

PROFESSIONAL ENGINEER LICENSED P-15560 STATE OF IDAHO JARED M. HOPKINS
Jared M. Hopkins
6-6-2016

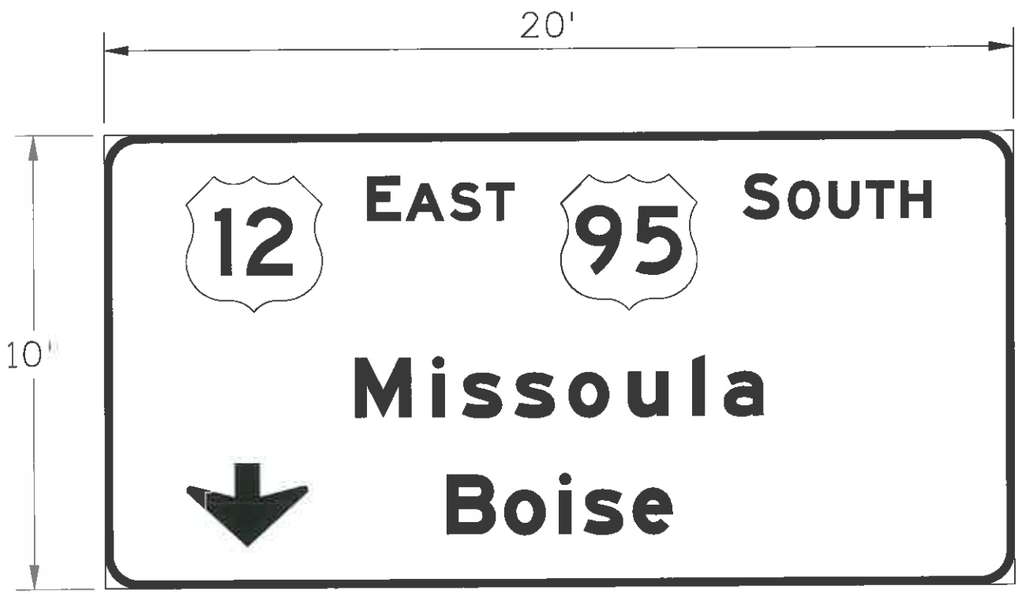

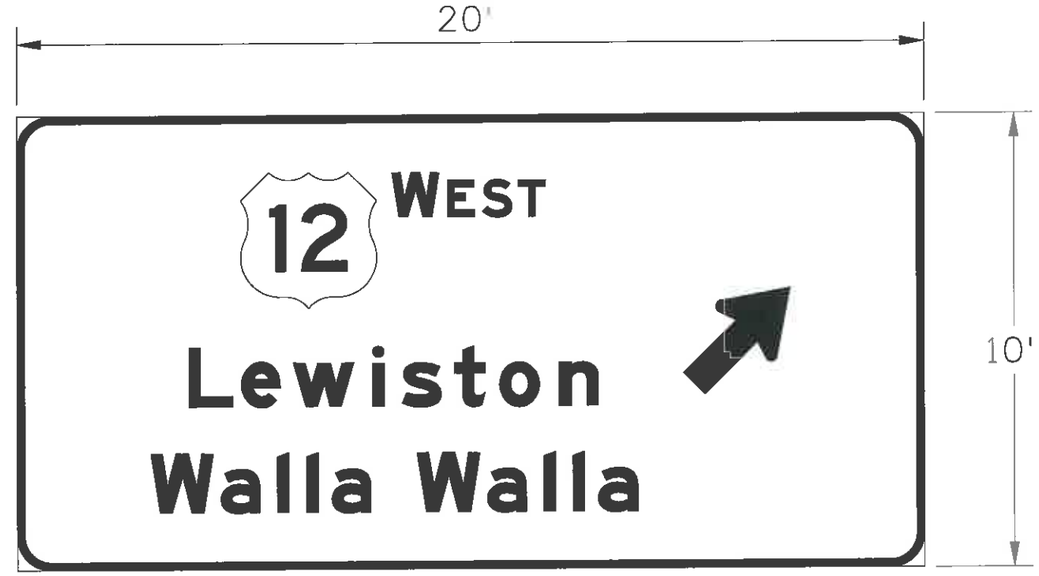

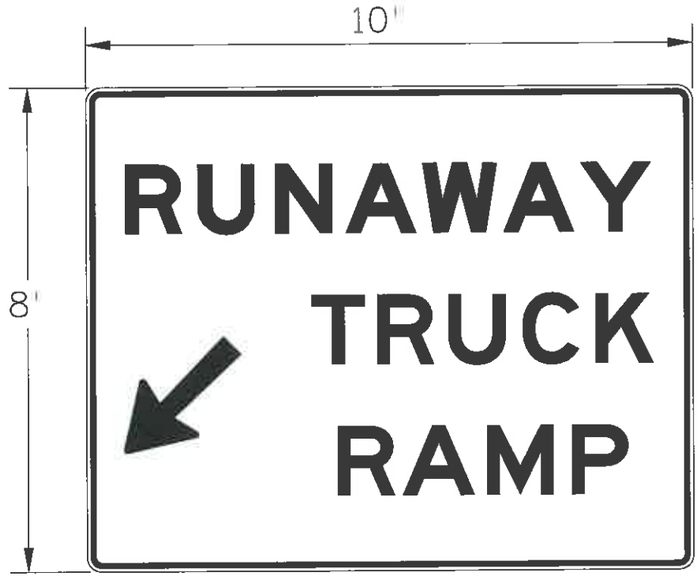

Extruded Aluminum Signs
to be provided by ITD

REVISIONS			
NO.	DATE	BY	DESCRIPTION

DESIGNED P. Frei	SCALES SHOWN ARE FOR 11" X 17" PRINTS ONLY	IDAHO TRANSPORTATION DEPARTMENT
DESIGN CHECKED J. Hopkins		
DETAILED P. Frei	CADD FILE NAME 19775_sdtl_001.DGN	
DRAWING CHECKED J. Hopkins	DRAWING DATE: MAY 2016	District 2 - Lewiston, ID

PROJECT NO.	SIGN DETAIL SHEET	English
A019(775)	D2 SIGN BRIDGE REPLACEMENT US-95	COUNTY NEZ PERCE KEY NUMBER 19775 SHEET 4 OF 4

PROFESSIONAL ENGINEER LICENSED P-15560 STATE OF IDAHO JARED M. HOPKINS
Jared M. Hopkins 6-6-2016

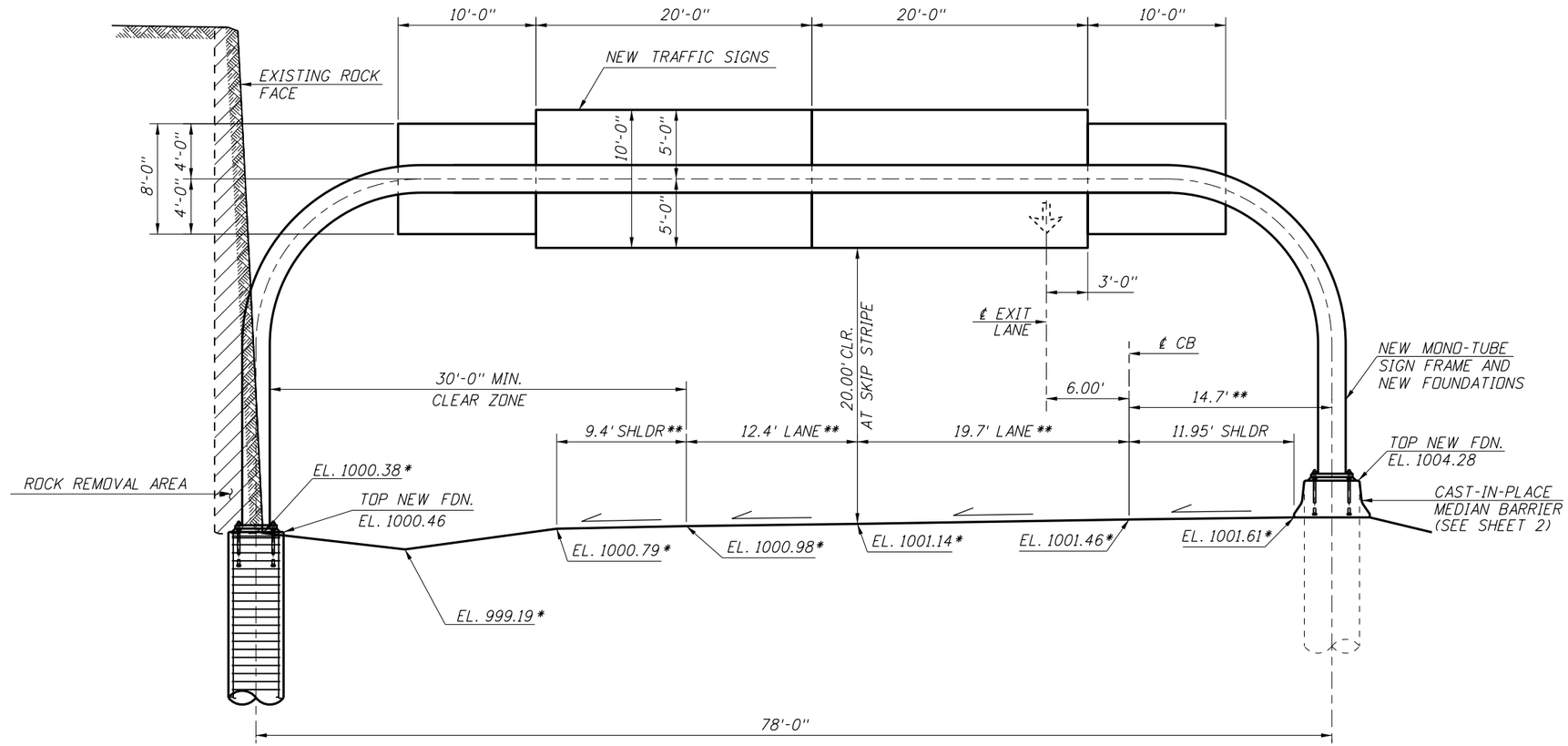

STRUCTURE NO. 3 @ STA. 113+25 C-B (US-95 SBL)
LOOKING AHEAD ON STATION
1"=5'-0"

NOTES:

1. OVERHEAD SIGN STRUCTURE INCLUDING FOUNDATIONS SHALL BE DESIGNED BY THE CONTRACTOR IN ACCORDANCE WITH ITD STANDARD SPECIFICATIONS AND THE JANUARY 2016 SUPPLEMENTAL SPECIFICATIONS, SECTION 616. USE ADT ≥ 10,000.
2. THIS NEW OVERHEAD SIGN STRUCTURE REPLACES SIGN STRUCTURE NO. 3 AT STATION 112+50 ON C-B ALIGNMENT, ORIGINAL BRIDGE DRAWING NUMBER 13792.
3. STATION SHOWN FOR NEW OVERHEAD STRUCTURE IS APPROXIMATE. ACTUAL LOCATION WILL BE FIELD STAKED BY ITD. ELEVATIONS SHOWN ARE FIELD SURVEYED ELEVATIONS AT ACTUAL LOCATION OF NEW OVERHEAD STRUCTURE, DENOTED BY *.
4. THE CENTER TO CENTER OF FOUNDATION DIMENSION WAS COMPUTED BASED ON THE FOLLOWING:
   a. FIELD MEASURED EXISTING ROADWAY WIDTHS, DENOTED BY **.
   b. 30'-0" MININUM CLEAR ZONE REQUIREMENT FROM EDGE OF TRAVELED LANE TO FACE OF SIGN POST AT ROCK FACE.
   c. AN ASSUMED 24" O.D. POST SIZE.
   d. COMPUTED DIMENSION ROUNDED UP TO NEAREST 6" INCREMENT.

   IF A LARGER POST DIAMETER IS PROPOSED, THE CENTER TO CENTER OF FOUNDATION DIMENSION MAY NEED TO BE INCREASED TO MEET THE MINIMUM CLEAR ZONE REQUIREMENT. DIMENSIONAL ADJUSTMENT SHALL BE INCLUDED IN DESIGN SUBMITTAL AND SHOP PLANS.

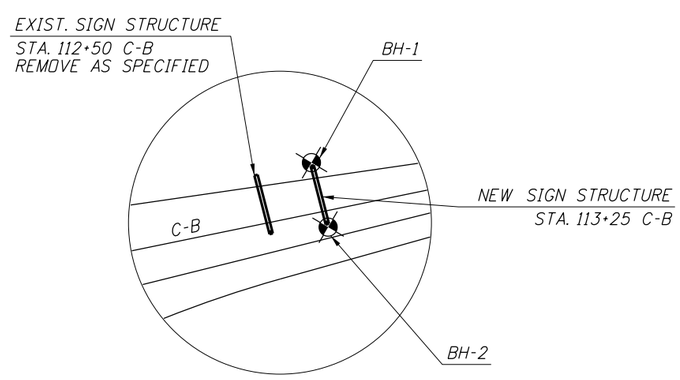

VIEW A
N.T.S.

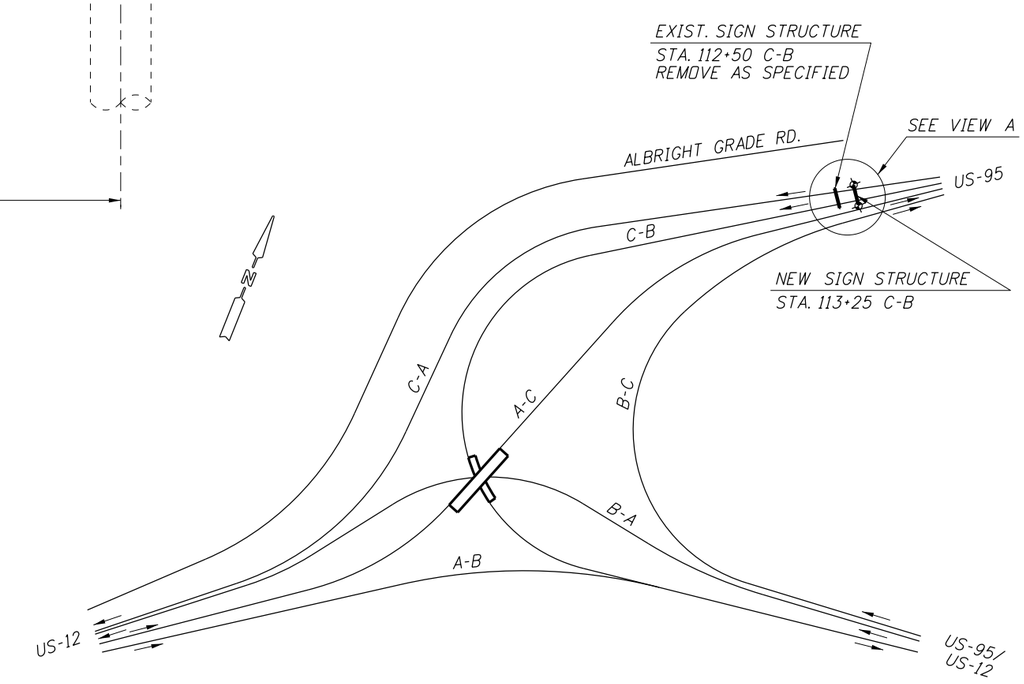

LOCATION PLAN
N.T.S.

REVISIONS			
NO.	DATE	BY	DESCRIPTION

DESIGNED E. A. SHANNON
DESIGN CHECKED
DETAILED M. P. PLOTTS
DWG. CHECKED
CORRECTIONS G. D. HOGG

SCALES SHOWN ARE FOR 34" X 22" PRINTS ONLY
CADD FILE NO. pwild:\HO\Bridge Inspection\ZZ\\plan\19775_brih_001.dgn
DRAWING DATE: 05-18-2016

ORIGINAL SIGNED BY: PROFESSIONAL ENGINEER REGISTERED 5637 STATE OF IDAHO ELIZABETH A. SHANNON
DATE SIGNED: 6-7-16
ORIGINAL STORED AT ITD BRIDGE SECTION

REGISTERED PROFESSIONAL ENGINEER 4701 STATE OF IDAHO MATTHEW M. FARRAR
ORIGINAL APPROVED BY: BRIDGE ENGINEER
DATE SIGNED: 6-7-16

IDAHO TRANSPORTATION DEPARTMENT

English
PROJECT NO.
A019(775)

SITUATION AND LAYOUT
TRAFFIC SIGN STRUCTURE REPLACEMENT
US-95/US-12 AT LEWISTON HILL I.C.
STA. 113+25 C-B (STRUCTURE NO. 3)

BRIDGE PLANS
BRIDGE KEY NO. -----
COUNTY NEZ PERCE
KEY NO. 19775
BRIDGE DRAWING NO. 13792A
SHEET 1 OF 2

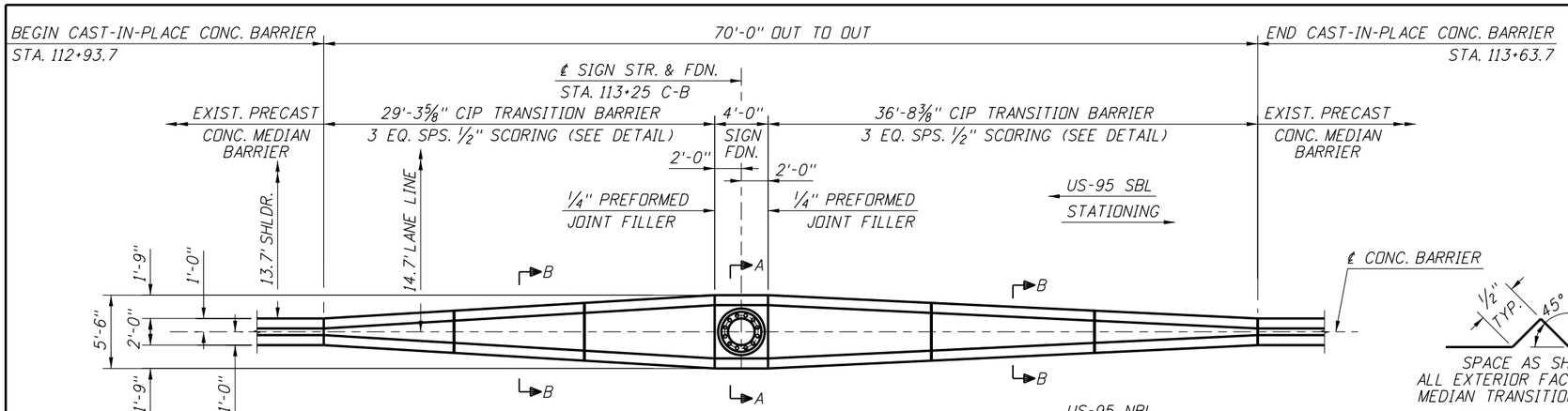

PLAN
3/16"=1'-0"

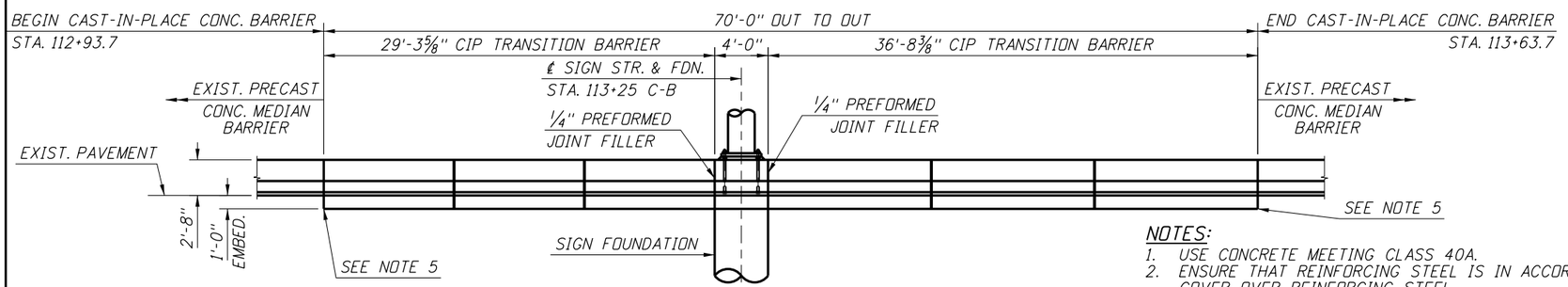

ELEVATION
3/16"=1'-0"

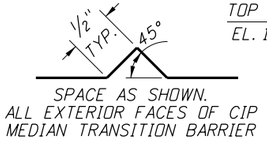

SCORING DETAIL
NTS

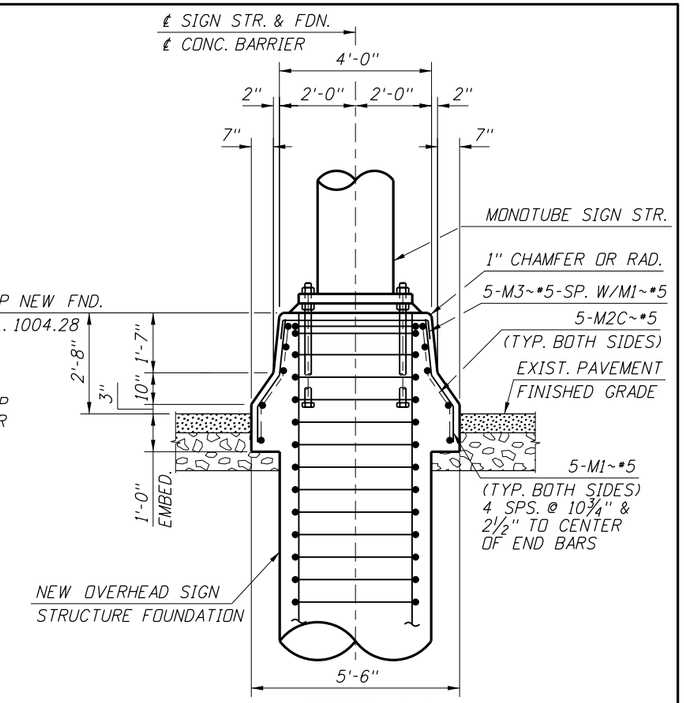

SECTION A-A
½"=1'-0"

NOTES:

1. USE CONCRETE MEETING CLASS 40A.
2. ENSURE THAT REINFORCING STEEL IS IN ACCORDANCE WITH SECTION 708, AASHTO M31, GRADE 60. PROVIDE 2" MINIMUM COVER OVER REINFORCING STEEL.
3. ENSURE THAT REINFORCING STEEL BENDS ARE MADE IN ACCORDANCE WITH THE LATEST ACI STANDARD PRACTICES AND AASHTO SPECIFICATIONS. THE DIMENSIONS SHOWN IN THE REINFORCEMENT DETAILS TABLE ARE MEASURED FROM OUTSIDE TO OUTSIDE OF BENDS OR BAR ENDS UNLESS OTHERWISE NOTED.
4. DIMENSIONS OF CAST-IN-PLACE CONCRETE TRANSITION BARRIER ARE BASED ON AN ASSUMED 4'-0" DIAMETER DRILLED SHAFT FOUNDATION FOR NEW OVERHEAD SIGN STRUCTURE. NOTIFY ITD OF PROPOSED SIGN FOUNDATION SIZE SO THAT CAST IN PLACE TRANSITION BARRIER DIMENSIONS CAN BE ADJUSTED IF NECESSARY.
5. CAST-IN-PLACE TRANSITION BARRIER SHALL CONNECT TO EXISTING PRECAST BARRIER WITH EITHER END VIEW 1 OR END VIEW 2 CONNECTION DETAIL. SEE STANDARD DRAWING G-2-A-2 FOR END CONNECTION DETAILS. FIELD VERIFY END CONNECTION DETAIL REQUIRED.

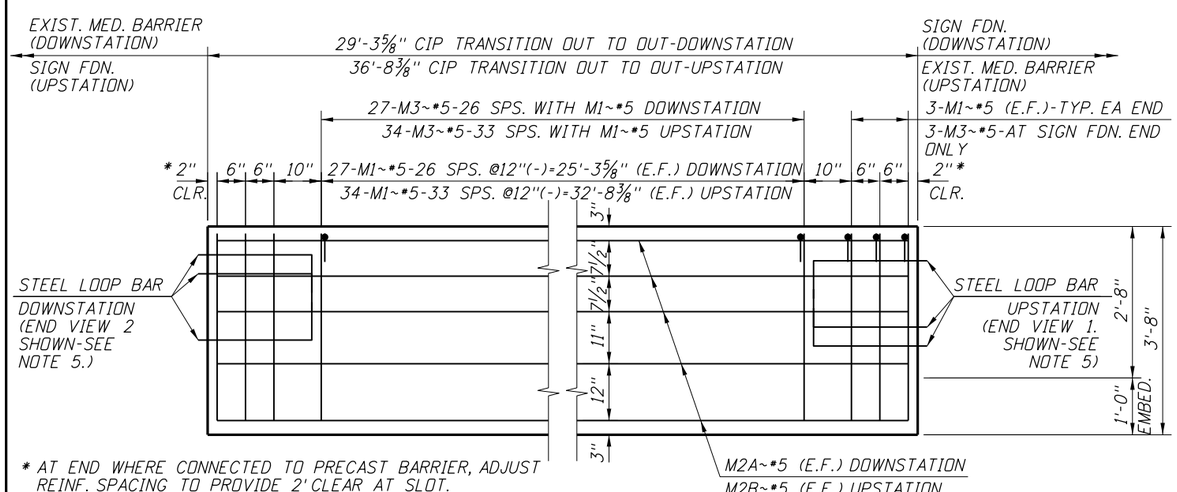

* AT END WHERE CONNECTED TO PRECAST BARRIER, ADJUST REINF. SPACING TO PROVIDE 2' CLEAR AT SLOT.

TRANSITION REINFORCEMENT
¾"=1'-0"

REINFORCEMENT DETAILS

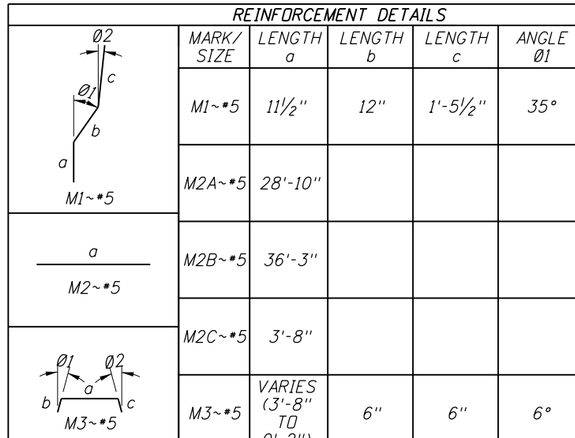

MARK/ SIZE	LENGTH a	LENGTH b	LENGTH c	ANGLE Ø1	ANGLE Ø2
M1~#5	11½"	12"	1'-5½"	35°	6°
M2A~#5	28'-10"				
M2B~#5	36'-3"				
M2C~#5	3'-8"				
M3~#5	VARIES (3'-8" TO 0'-2")	6"	6"	6°	6°

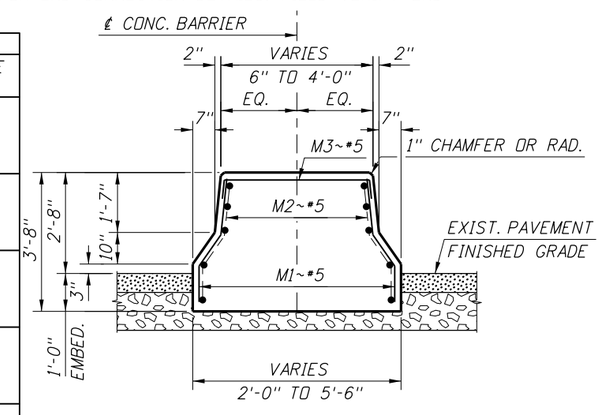

SECTION B-B
½"=1'-0"

REVISIONS			
NO.	DATE	BY	DESCRIPTION

DESIGNED: E. A. SHANNON
DESIGN CHECKED
DETAILED: G. D. HOGG
DWG. CHECKED
CORRECTIONS

SCALES SHOWN ARE FOR 34" X 22" PRINTS ONLY
CADD FILE NO. pwld:\HQ\Bridge Inspection\ZZ\\Plans\19775_brlh_002.dgn
DRAWING DATE: 05-24-2016

ORIGINAL SIGNED BY:
PROFESSIONAL ENGINEER REGISTERED 5637 STATE OF IDAHO ELIZABETH A. SHANNON
DATE SIGNED: 6-7-16
ORIGINAL STORED AT ITD BRIDGE SECTION

IDAHO TRANSPORTATION DEPARTMENT
ORIGINAL APPROVED BY: BRIDGE ENGINEER MATTHEW M. FARRAR
ORIGINAL SIGNED ON DATE: 6-7-16

English
PROJECT NO.
A019(775)

SIGN STRUCTURE FOUNDATION & MEDIAN BARRIER DETAILS
TRAFFIC SIGN STRUCTURE REPLACEMENT
US-95/US-12 AT LEWISTON HILL I.C.
STA. 113+25 C-B (STRUCTURE NO. 3)

BRIDGE PLANS
BRIDGE KEY NO. -------
COUNTY: NEZ PERCE
KEY NO. 19775
BRIDGE DRAWING NO. 13792A
SHEET 2 OF 2

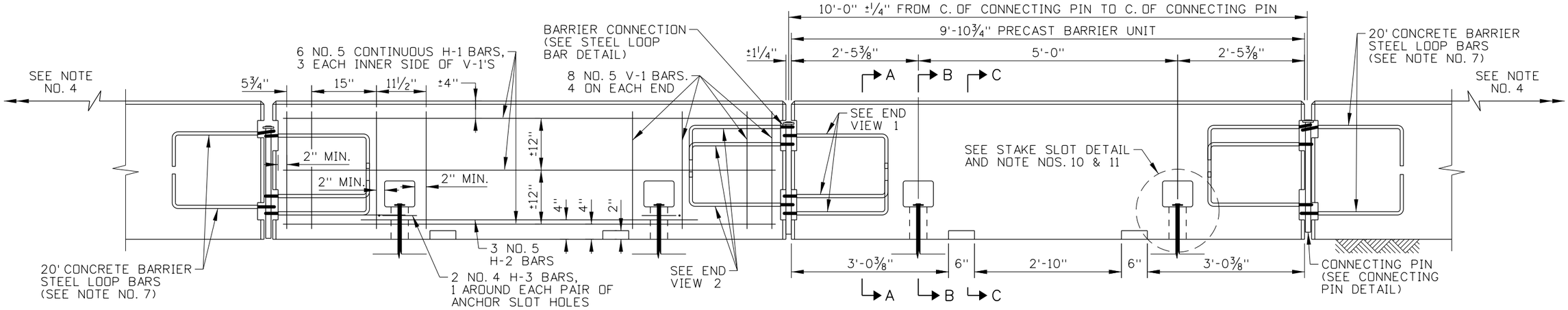

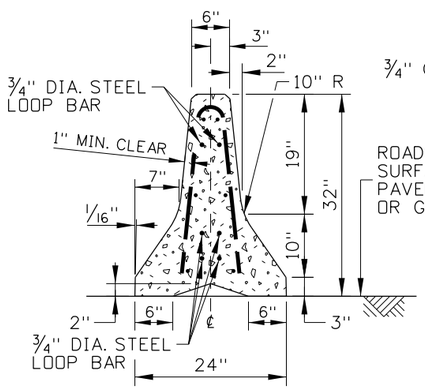

SECTION A-A

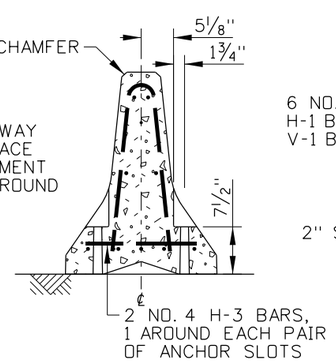

SECTION B-B

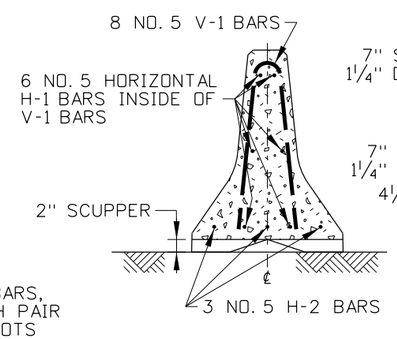

SECTION C-C

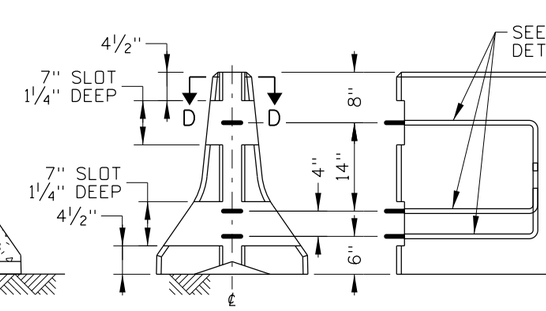

END VIEW 1

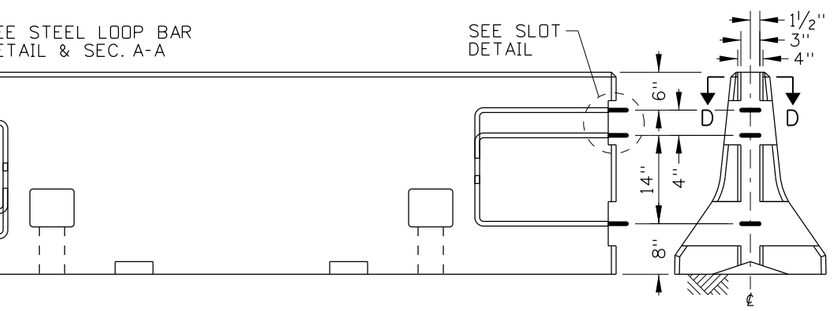

CONNECTION LOOP DETAIL

END VIEW 2

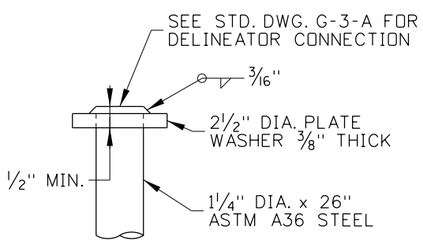

CONNECTING PIN (FABRICATED)

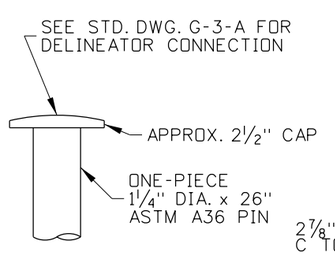

CONNECTING PIN (ONE-PIECE)

CONNECTING PIN DETAIL

(SEE NOTE NO. 5)

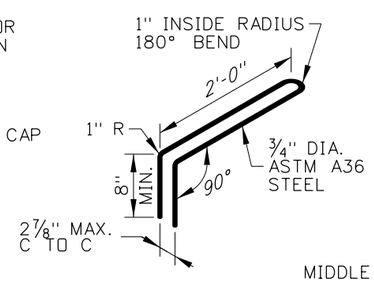

STEEL LOOP BAR DETAIL

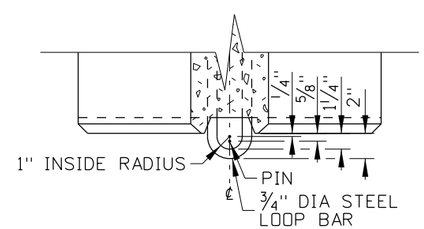

SECTION D-D

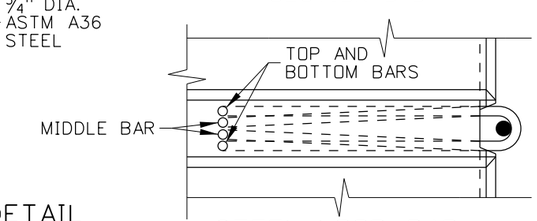

STEEL LOOP BAR PLACEMENT DETAIL

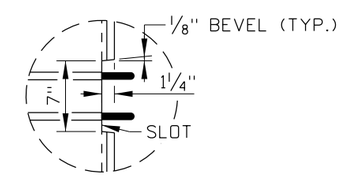

SLOT DETAIL

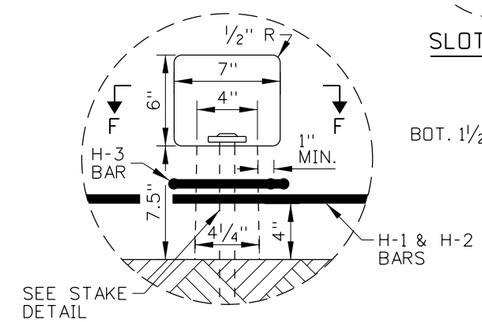

STAKE SLOT DETAIL

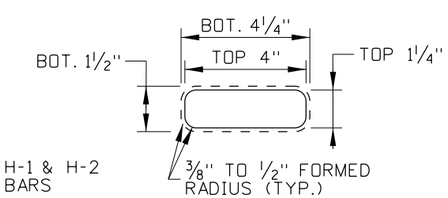

SECTION F-F

ORIGINAL STORED AT: ITD, Headquarters 3311 West State Boise, Idaho

ORIGINAL SIGNED BY: RYAN D. LANCASTER DATE ORIGINAL SIGNED: MAY 16, 2014

REVISIONS

NO.	DATE	BY	NO.	DATE	BY	NO.	DATE	BY
1	6-02	MSM	6	03-13	RDL			
2	7-03	MSM	7	04-14	RDL			
3	6-04	MSM						
4	11-04	MSM						
5	9-10	PLR						

SCALES SHOWN ARE FOR 11" X 17" PRINTS ONLY

CADD FILE NAME: g2a2_0514.dgn

DRAWING DATE: APRIL, 2002

IDAHO TRANSPORTATION DEPARTMENT

BOISE IDAHO

ORIGINAL SIGNED BY: CARL D. MAIN

DESIGN/TRAFFIC SERVICES ENGINEER

STANDARD DRAWING

10' CONCRETE BARRIER

REQUIRES SHEETS 2 OF 3 & 3 OF 3

English

STANDARD DRAWING NO.

G-2-A-2

SHEET 1 OF 3

ITD-800 11-04

REPORT OF TESTS ON MATERIAL

Sample of Paint Chips Key No. 19775 District No. Two

Project No. A019(775) County Nez Perce

Contract Item No. N/A Location US-95, Lewiston Hill Sign Replacement

Date Sampled 05/09/16 Sampled By Paul Frei Identification No. PF/E162660-B-CN/901-CX

Sample Description Ziplock Bag Containing Several Paint Chips Sampled From Sign

Manufacturer N/A Quantity Represented One Sample

Supplier N/A Batch or Lot No. N/A

Test Requested EPA Methods 200.7 & SW 846 3050 (Total Lead, Chromium and Cadmium)

Send To Jared Hopkins Date Received 05/11/16 Laboratory No. 169CH0312

==========

TEST RESULTS*

COUNTY:	Nez Perce
LOCATION:	US-95, Lewiston Hill
TOTAL LEAD (mg/kg):	118,000**
TOTAL CHROMIUM (mg/kg):	6,990**
TOTAL CADMIUM (mg/kg):	25.0**

Results are reported in milligrams per Kilogram.
One milligram per Kilogram equals one part per million.

REMARKS: *Testing was conducted by Analytical Labs. **This concentration indicates that Lead Abatement Procedures will need to be implemented before any repainting.

MATERIAL AS REPRESENTED IS: ☐ ACCEPTABLE ☐ SUBJECT TO REJECTION ☒ FOR INFORMATION ONLY

THIS REPORT COVERS ONLY MATERIAL AS REPRESENTED BY THE SAMPLE SUBMITTED AND DOES NOT NECESSARILY COVER ALL MATERIAL FROM THIS SOURCE.

DATE MAILED June 6, 2016

RON WRIGHT
LAB MANAGER

ITD-800 11-04

REPORT OF TESTS ON MATERIAL

Sample of Paint Chips Key No. 19775 District No. Two

Project No. A019(775) County Nez Perce

Contract Item No. N/A Location US-95, Lewiston Hill Sign Replacement

Date Sampled 05/09/16 Sampled By Paul Frei Identification No. PF/E162660-B-CN/902-CX

Sample Description Ziplock Bag Containing Several Paint Chips Sampled From Bridge Column

Manufacturer N/A Quantity Represented One Sample

Supplier N/A Batch or Lot No. N/A

Test Requested EPA Methods 200.7 & SW 846 3050 (Total Lead, Chromium and Cadmium)

Send To Jared Hopkins Date Received 05/11/16 Laboratory No. 169CH0313

==========

TEST RESULTS*

COUNTY:	Nez Perce
LOCATION:	US-12, Lewiston Hill
TOTAL LEAD (mg/kg):	169,000**
TOTAL CHROMIUM (mg/kg):	10,100**
TOTAL CADMIUM (mg/kg):	1.5

Results are reported in milligrams per Kilogram.
One milligram per Kilogram equals one part per million.

REMARKS: *Testing was conducted by Analytical Labs. **This concentration indicates that Lead Abatement Procedures will need to be implemented before any repainting.

MATERIAL AS REPRESENTED IS: ☐ ACCEPTABLE ☐ SUBJECT TO REJECTION ☒ FOR INFORMATION ONLY

THIS REPORT COVERS ONLY MATERIAL AS REPRESENTED BY THE SAMPLE SUBMITTED AND DOES NOT NECESSARILY COVER ALL MATERIAL FROM THIS SOURCE.

DATE MAILED June 6, 2016

RON WRIGHT
LAB MANAGER

ITD 0500 (Rev.10-07)

Department Memorandum
Idaho Transportation Department

DATE: June 8, 2016 **Program Number(s)** A019(775)

TO: DORAL HOFF, P.E.
DISTRICT ENGINEERING MANAGER **Key Number(s)** 19775

FROM: CHAD W. CLAWSON, P.E.
DISTRICT MATERIALS ENGINEER **Program ID, County, Etc.** US 95, LEWISTON HILL SIGN REPLACEMENT

RE: PHASE IV ABREVIATED MATERIALS FOUNDATION REPORT

This report provides necessary information to design the foundations for the replacement sign structure.

Prepared By:

REGISTERED PROFESSIONAL ENGINEER 4115 STATE OF IDAHO

ITD Geotechnical Engineer — 06/08/2016 Date

Prepared By:

REGISTERED PROFESSIONAL ENGINEER 13039 6/8/16 STATE OF IDAHO CHAD W. CLAWSON

District Materials Engineer — 6/8/16 Date

Approved By:

District Engineering Manager — 6/8/16 Date

ABBREVIATED FOUNDATION INVESTIGATION REPORT

US-95 LEWISTON HILL SIGN BRIDGE REPLACEMENT

PROJECT No.: A019(775)

KEY No.: 19775

250.1 Introduction. This abbreviated Foundation Investigation report presents the results of the subsurface investigation performed by ITD District 2 for the proposed Sign Bridge located on US-95, MP 312.4 on the Lewiston Hill. This proposed Sign Bridge is to replace the existing damaged sign bridge located about 75 feet south of the new proposed sign bridge. A vicinity map is given in the Appendix.

Recommendations for design of the sign bridge foundations in this report are for LRFD design method.

250.2 Field Exploration and Laboratory Testing

250.2.1 Borings: Two test holes were drilled by Johnson Drilling of Rathdrum, Idaho, using a Mobile Drill B-53 in late April and early May 2016. Bore hole BH-1 was located west of the roadway and terminated at an approximate depth of 20 feet. Bore hole BH-2 was located at the centerline of the roadway and terminated at approximate depth of 29 feet.

250.2.2 Field Tests: Rock Quality Designations (RQD) were determined for basalt rock at BH-2. SPT tests were performed in soils below bedrock at BH-2. These field test results are shown in the boring logs in the Appendix.

250.2.3 Geophysical Exploration: N/A

250.2.4 Laboratory Tests: Soil classification tests were performed on soil samples obtained from the SPT tests. Unconfined Compressive Strength tests were performed on rock cores obtained from BH-2. Results of laboratory tests are included in the Appendix.

250.3 Surface Conditions: The west foundation is anticipated to be placed with 30 feet clear space from the edge line. This location is at the basalt cut face. Photographs 1 and 2 in the Appendix show a 2 feet tall traffic cone placed 30 feet from the edge line to show the location in relationship to the basalt face. The basalt cut face is approximately 1.4:1 slope. Rock chipping to construct the foundation is to be expected.

250.4 Subsurface Conditions: In general, subsurface conditions at the site of this sign bridge are as follows: Highly fractured basalt bedrock, with estimated RQD = 0, exists from ground surface (or below pavement ballast at BH-2) to approximated depth of 3 feet. From 3 to 12 feet depth is fractured basalt with average RQD = 45%. Average unconfined compressive strength of the basalt bedrock is 20,645 psi. Below the basalt bedrock is elastic silt (MH) to depth of about 29 feet. This elastic silt is very stiff to hard with average N value of about 60.

250.5 Conclusions and Recommendations

250.5.1 General: Deep foundation, such as drilled shaft, is recommended for supporting this sign bridge.

250.5.2 Foundations

250.5.2.1 Deep Foundations: Drilled shafts embedded in basalt bedrock and elastic silt are recommended for supporting the sign bridge. It is estimated that the drilled shafts

will have a diameter from 3.5 to 4 feet and be embedded deep enough in rock and soils to provide resistances to vertical, lateral, torsional and up-lift forces. The following soil and rock properties can be used to design the drilled shafts, in accordance with AASHTO LRFD Specifications for Structural Support for Highway Signs, Luminaires and Traffic Signals.

- Drilled Shaft Axial Load Capacity:

Layer	Unit Weight, (pcf.)	Cohesion, (psf.)	Friction Angle, °.	Ultimate Unit Skin Friction, (psf.)*
BASALT	160	3500	36	7500
ELASTIC SILT	120	1000	30	1000

*resistance factor of 0.5 is recommended for unit skin friction for Strength limit state design.

Shaft base resistance should be neglected in calculating the shaft axial capacity because it is unlikely that the bottom of the drilled hole will be inspected and cleaned before placing of concrete. Also, due to expected low vertical loading from the sign structure, there will not be enough downward movement of the shaft to mobilize the shaft base resistance. The top 3 feet of highly fractured basalt bedrock should also be neglected in calculating the axial capacity of the shafts.

- **Drilled Shaft Lateral Load Resistance:** Drilled shaft lateral load analyses can be performed using computer programs such as LPILE. The following soil and rock properties are recommended for lateral load resistance analyses.

Layer	Unit Weight, (pcf.)	Cohesion, (psf.)	Friction Angle, º.	Uniaxial Compressive Strength, (psf.)	Coeff. of Lateral Subgrade Reaction, k,(pci.)	Strain at 50% of maximum stress, ϵ_{50}
BASALT	160	3500	36	20650	2000	0.003
ELASTIC SILT	120	1000	30	4000	500	0.005

The top 3 feet of the drilled shaft should be neglected in the lateral load analysis.

250.6 Construction: Ground water may exist during the construction of drilled shaft. The water level in BH-2 was measured to be at the bottom of the basalt layer approximately 12 hours after drilling was completed; it is unknown if this was ground water or drilling water.

Temporary casing may be needed to keep the holes open during shaft construction. Provide temporary casing with a smooth wall structure of steel base metal of sufficient strength to resist damage and deformation from transportation and handling, installation and extraction stresses, and all pressures and forces acting on the casing. Provide the casing which is capable of being removed without deforming and causing damage to the completed shaft, and without disturbing the surrounding soil. Temporary casing should have inside diameter of at least equal to the shaft diameter.

Concrete should be maintained at least 5 feet above the casing bottom during placement as casing is being extracted.

250.7 Appendices

A. Vicinity Map (Google Earth)

B. Boring Logs

C. Lab Test Results

D. Photographs: Basalt face on west side (2' Tall Cone placed at 30' from Edge Line).

Vicinity Map
(Google Earth)

US-95 sign Lew BH-1
US-95 sign Lew BH-2
© 2016 Google
Google
1998
Imagery Date: 6/30/2015 46°26'06.04" N 116°59'27.59" W elev 1008 ft eye

Field Boring/Test Pit Log

ITD 0981 (Rev. 01-13)
itd.idaho.gov

Sheet 1 of 2

See Section 445.00 of the Materials Manual for instructions on filling out this form.

Key Number	Project Number	Project Name and Location
19775	A019(775)	US-95 LEWHILL SIGN BRIDGE REPLACEMENT

Boring/Test Pit No.	Boring/Test Pit Location	Boring/Test Pit Reference Point
BH-1	WEST SIDE OF ROADWAY 46°26'06.28630N 116°59'27.62270W	

Collar/Ground Surface Elevation	Termination Elevation	Water Level Elevation	After (hours or days)	Drilling Start Date	Drilling End Date
912.35	892.35'			4/28/16	4/29/16

District or Drilling Company	Driller's Name	Geologist/Technician's Name	Drilling/Excavation Method	Driving Wt. and Avg. Drop
JOHNSON DRILLING	JOHNSON	CLARKSON	MOBILE DRILL B-53	-

Depth – ft	Sample Type	Sample Number	Sample Depth – ft	Resistance or SPT Blows per 6 inches	Moisture	Apparent Density or Consistency	Color	Description	Group Symbol	Remarks
0										CORE DRILL
1										
2										
3							GRAY	HIGHLY FRACTURED DIGED BASALT		9" RECOVERED
4										0.5 RECOVERY 0.5' RECOVERY
5										↓
6										
7										
8										
9										
10										
11										
12								BASALT & RIVER GRAVEL CONGLOMERATE		
13								ALLUVIAL RIVER GRAVEL AND COBBLES AND BROWN CLAY PLASTIC		
14										
15								DIFFERING CLAYEY LAYERS WITH SAND AND GRAVEL		

Field Boring/Test Pit Log

ITD 0981 (Rev. 01-13)
itd.idaho.gov

Sheet 2 of 2

See Section 445.00 of the Materials Manual for instructions on filling out this form.

Key Number	Project Number	Project Name and Location
19775	A019(775)	US-95 LEWHILL SIGN BRIDGE REPLACEMENT

Boring/Test Pit No.	Boring/Test Pit Location	Boring/Test Pit Reference Point
BH-1	WEST SIDE OF ROADWAY	ROADWAY

Collar/Ground Surface Elevation	Termination Elevation	Water Level Elevation	After (hours or days)	Drilling Start Date	Drilling End Date
SEE SHEET 1 OF 2	—	—	—	4/28/16	4/29/16

District or Drilling Company	Driller's Name	Geologist/Technician's Name	Drilling/Excavation Method	Driving Wt. and Avg. Drop
JOHNSON DRILLING	JOHNSON	CLAWSON	MOBILE DRILL B-53	—

Depth – ft	Sample Type	Sample Number	Sample Depth – ft	Resistance or SPT Blows per 6 inches	Moisture	Apparent Density or Consistency	Color	Description	Group Symbol	Remarks
16										
17								ALLUVIAL COBBLE		
18								SANDY CLAY, PLASTIC		
19										
20										BOTTOM OF HOLE

Field Boring/Test Pit Log

ITD 0981 (Rev. 01-13)
itd.idaho.gov

Sheet 1 of 2

See Section 445.00 of the Materials Manual for instructions on filling out this form.

Key Number	Project Number	Project Name and Location
19775	A019(775)	US-95 GEN HILL SIGN BRIDGE REPLACEMENT

Boring/Test Pit No.	Boring/Test Pit Location	Boring/Test Pit Reference Point
BH-2	℄ US-95 46°26'05.70982 N 116°59'27.02394 W	℄

Collar/Ground Surface Elevation	Termination Elevation	Water Level Elevation	After (hours or days)	Drilling Start Date	Drilling End Date
914.41'	885.16'	11.5'	SEE NOTE	5/3/16	5/3/16

District or Drilling Company	Driller's Name	Geologist/Technician's Name	Drilling/Excavation Method	Driving Wt. and Avg. Drop
JOHNSON DRILLING	JOHNSON	CLAWSON	MOBILE DRILL B-53	-

Depth – ft	Sample Type	Sample Number	Sample Depth – ft	Resistance or SPT Blows per 6 inches	Moisture	Apparent Density or Consistency	Color	Description	Group Symbol	Remarks
0								AC PAVEMENT		
1								NO 3/4" BASE RECOVERED		
2							GRAY	BASALT GRAVEL SUBANGULAR		9" RECOVERY
3										
4										
5							GRAY	FRACTURED BASALT		NO PIECES OVER 4"
6										5/12 = 0.42 RQD
7										SAMPLE TAKEN * FOR ROCK STRENGTH
8										15/20 = 0.75 RQD * SAMPLE TAKEN
9										
10										4/27 = 0.15 RQD
11					10:00 AM 5/4/16 AFTER DRILL PIPE WAS REMOVED.			BOTTOM OF BASALT RIVER GRAVEL CONGLOMERATE		
12										
13	SPT	60	12				BRN GRAY	CLAY WITH SAND AND GRAVEL - PLASTIC NUGGETS		13/35/25
14										
15										

Field Boring/Test Pit Log

ITD 0981 (Rev. 01-13)
itd.idaho.gov

See Section 445.00 of the Materials Manual for instructions on filling out this form.

Key Number	Project Number	Project Name and Location
19775	A019(775)	US-95 LEWIHILL SIGN BRIDGE REPLACEMENT

Boring/Test Pit No.	Boring/Test Pit Location	Boring/Test Pit Reference Point
BH-2	℄ US-95	℄

Collar/Ground Surface Elevation	Termination Elevation	Water Level Elevation	After (hours or days)	Drilling Start Date	Drilling End Date
SEE SHEET 1 OF 2				5/3/16	5/3/16

District or Drilling Company	Driller's Name	Geologist/Technician's Name	Drilling/Excavation Method	Driving Wt. and Avg. Drop
JOHNSON DRILLING	JOHNSON	CLAWSON	MOBILE DRILL B-53	–

Depth – ft	Sample Type	Sample Number	Sample Depth – ft	Resistance or SPT Blows per 6 inches	Moisture	Apparent Density or Consistency	Color	Description	Group Symbol	Remarks
16										
17										
18	SPT	50	3				BRN	CLAY AND SAND PLASTIC		6" 3" 18/50/–
19										
20										
21										
22										
23	SPT	61	12				BRN	CLAY WITH COBBLE AND SAND		27/30/31
24										
25										
26										
27										
28	SPT	50	4							
29							BRN	BROWN SILTY CLAY AND SAND WITH GRAVEL		6" 4" 30/50/–
30 29.25										BOTTOM
31										

US-95 LEW HILL
SIGN BRIDGE
BH-1 0'-10.5'
0.0'
3.0'
4.0'
4.5'
5.0'
5.5'
6.0'
6.5'
7.5'
8.5'

US-95 LEW HILL
SIGN BRIDGE
BH-1 10.5'-20'
10.5'
12.5
17.5
15
12.0'

US-95 LEW HILL
SIGN BRIDGE
BH-2 0'-9'
0.0'
2.5'
5.5'
6.5'
8.2'
Sample for Core Strength
Sample For Core Strength

US-95 LEW HILL
B14-2 SIGN BRIDGE
9' - 21'
13.5'
15.0'
18.5'
19.7'
10.5'

US-95 LEW HILL
SIGN BRIDGE
BH-2 21'-29.25'
25.0'
28.5
29.25'
23.5'

ASTM Designation: D7012-14

Compressive Strength of Intact Rock

Key No. 19775 Proj. No. A019(775) District No. 2 Lab No. 16-9SL-0078 & 0079
Proj. Name U. S. 95, Lewiston Hill Sign Replacement Date Received: May 5, 2016
Sample ID . BH-2 @ 6 ft. &7 ft. Submitted By C. Clawson, DME Date Submitted

Test Hole	Sample Number	Sample				Test Results	
		Depth (Ft.)		Diameter, D (in.)	Area, A (in.²)	Failure Load, P (lbs.)	Uniaxial Compressive Strength, σuc (psi)
		From	To				
BH-2	6 ft.	6		2.396	4.51	86473	19188
BH-2	7 ft.	7		2.396	4.51	99600	22101

Remarks: Method C was used for testing.

6 ft. core sample exibited a shear break
7 ft. core sample exibited a shear break

Tested by	WAQTC No.	Date Tested	Checked By	Date
Mike D. Sprague	# 20845	May 11, 2016	Geotechnical Engineer, P.E.	5/12/16
Lab Manager Ron Wright	Date Published May 12, 2016		TB	

19775_Copm. Strength_0078_0079_BH-2_6 & 7 ft.

ITD-803 10-11 L

REPORT OF TESTS ON SOILS

Sheet _____ Of _____

LIMS No 1E+05 Lab No. 16-9SL-0080

Key No. 19775 Project No. A019 (775) Source No.

Ident. No. CC / E162660 - B - PE / 13.5ft. County Nez Perce Date Sampled April 26, 2016

Submitted By Chad Clawson, DME For Chad Clawson, DME Date Received May 5, 2016

Station Test Hole BH-2 Depth 13.5-15.0ft.

Description of Soil elastic silt with sand

Mechanical Analysis % Pass		Soil Properties		Soil Properties	
3 In.	100	Liquid Limit	72	pH	
2 In.	100	Plastic Limit	36	Resistivity (ohm-cm)	
1 In.	100	Plasticity Index	36	Natural Moisture (%)	35.15
3/4 In.	100	Sp. Gr. (+19mm)		Odor	
1/2 In.	98	Sp. Gr. (-No.4)		Organic	
No. 4	97	Sand Equivalent		Texture	
No.10	96	R - Value		Color	
No. 20	94	Exp. Pressure, Psi			
No. 30	93	Unified Classification	MH	AASHTO Classification:	A-7-5(36)
No. 40	92				
No. 50	90	Remarks	This report covers only material as represented by this sample and does notnecessarily cover all soil from this layer or source.		
No. 100	88				
No. 200	84.5				

R VALUE

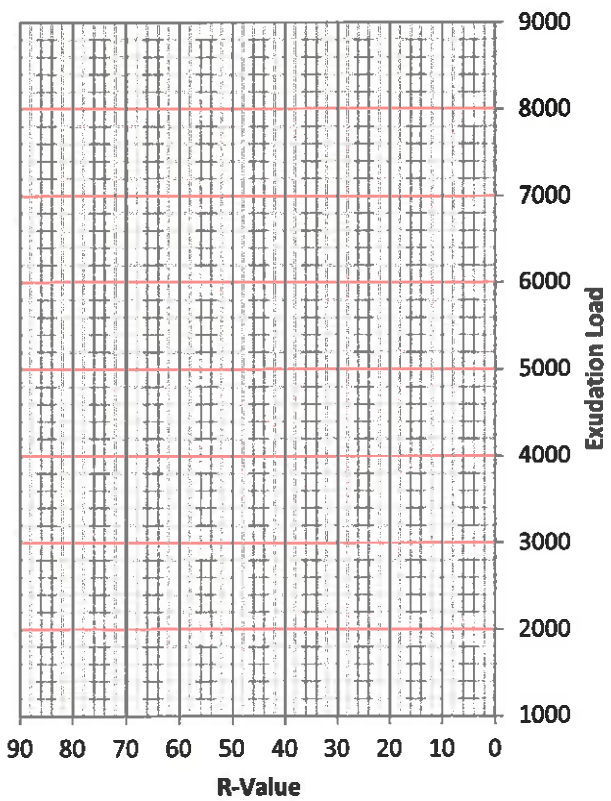

EXPANSION PRESSURE

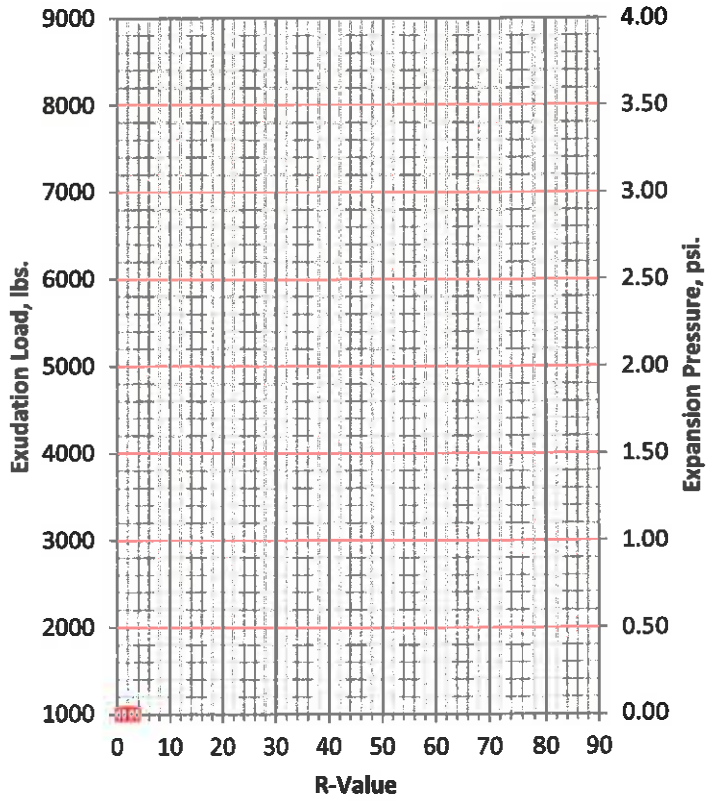

Tested By: Mike D. Sprague		Checked By: Geotechnical Engineer
Published Date:	May 11, 2015	Lab Manager: Ron Wright

19775_MC_Clas._0080_AH-2_13.5ft.

ITD-803 10-11 L

REPORT OF TESTS ON SOILS

Sheet _____ Of _____

LIMS No 1E+05 Lab No. 16-9SL-0081

Key No. 19775 Project No. A019 (775) Source No.

Ident. No. CC / E162660 - B - PE / 18.5 ft. County Nez Perce Date Sampled April 26, 2016

Submitted By Chad Clawson, DME For Chad Clawson, DME Date Received May 5, 2016

Station Test Hole BH-2 Depth 18.5-19.7ft.

Description of Soil gravelly elastic silt with sand

Mechanical Analysis % Pass		Soil Properties		Soil Properties	
3 In.	100	Liquid Limit	70	pH	
2 In.	100	Plastic Limit	36	Resistivity (ohm-cm)	
1 In.	82	Plasticity Index	34	Natural Moisture (%)	34.41
3/4 In.	82	Sp. Gr. (+19mm)		Odor	
1/2 In.	80	Sp. Gr. (-No.4)		Organic	
No. 4	80	Sand Equivalent		Texture	
No.10	78	R - Value		Color	
No. 20	73	Exp. Pressure, Psi			
No. 30	71	Unified Classification	MH	AASHTO Classification:	A-7-5(21)
No. 40	69				
No. 50	68	Remarks	This report covers only material as represented by this sample and does notnecessarily cover all soil from this layer or source.		
No. 100	66				
No. 200	64.0				

R VALUE

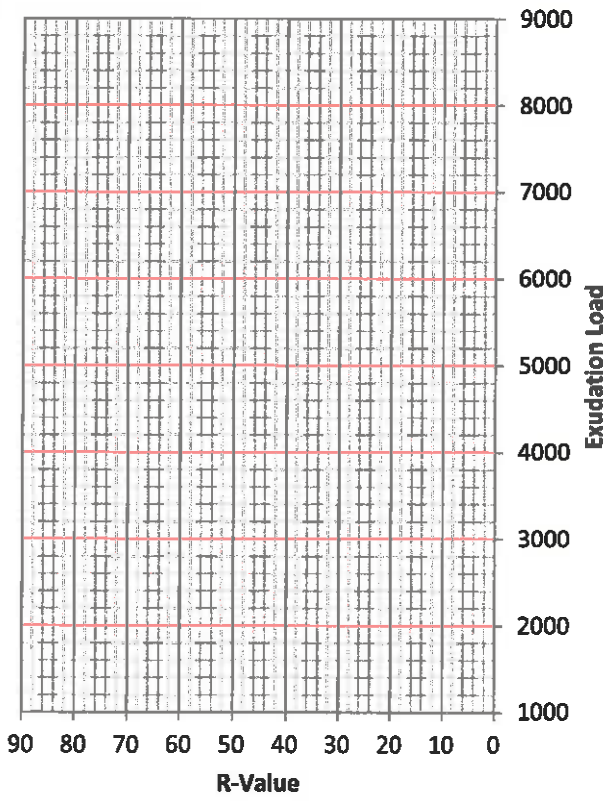

EXPANSION PRESSURE

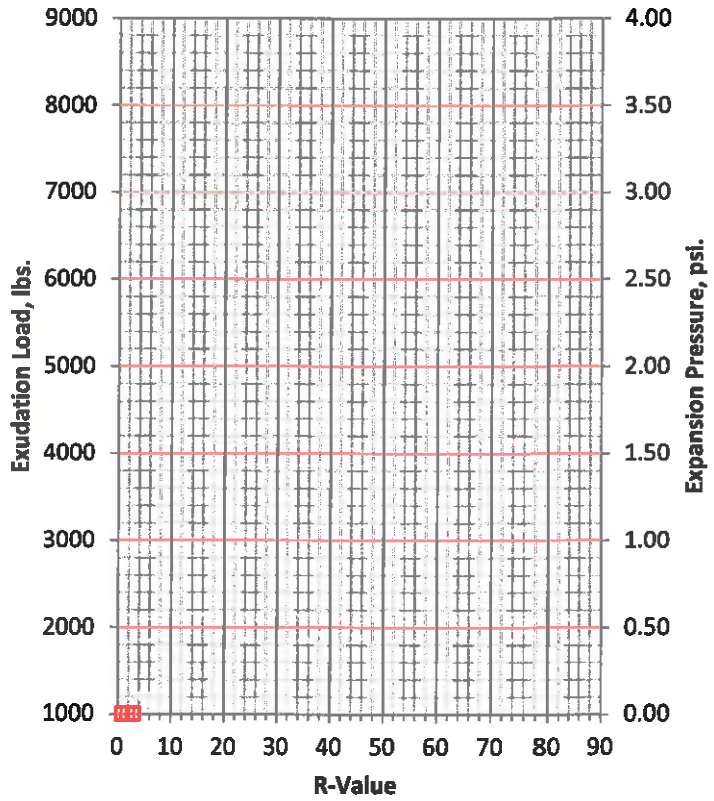

Tested By: Mike Sprague		Checked By: Geotechnical Engineer
Published Date:	May 11, 2016	Lab Manager: Ron Wright

TB

19775_MC_Clas._0081_AH-2_18.5ft.

ITD-803 10-11 L

REPORT OF TESTS ON SOILS

Sheet _____ Of _____

LIMS No 1E+05 Lab No. 16-9SL-0082

Key No. 19775 Project No. A019 (775) Source No.

Ident. No. CC / E162660 - B - PE / 23.5 ft. County Nez Perce Date Sampled April 26, 2016

Submitted By Chad Clawson, DME For Chad Clawson, DME Date Received May 5, 2016

Station Test Hole BH-2 Depth 23.5-25.0ft.

Description of Soil sandy elastic silt with gravel

Mechanical Analysis % Pass		Soil Properties		Soil Properties	
3 In.	100	Liquid Limit	57	pH	
2 In.	100	Plastic Limit	39	Resistivity (ohm-cm)	
1 In.	100	Plasticity Index	18	Natural Moisture (%)	29.10
3/4 In.	100	Sp. Gr. (+19mm)		Odor	
1/2 In.	96	Sp. Gr. (-No.4)		Organic	
No. 4	84	Sand Equivalent		Texture	
No.10	80	R - Value		Color	
No. 20	78	Exp. Pressure, Psi			
No. 30	78	Unified Classification	MH	AASHTO Classification:	A-7-5(11)
No. 40	77				
No. 50	76	Remarks	This report covers only material as represented by this sample and does notnecessarily cover all soil from this layer or source.		
No. 100	72				
No. 200	61.2				

R VALUE

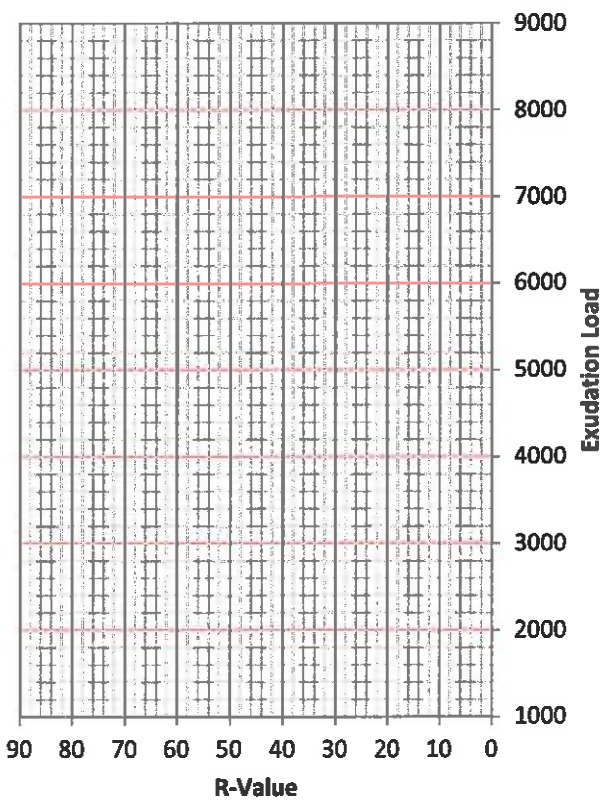

EXPANSION PRESSURE

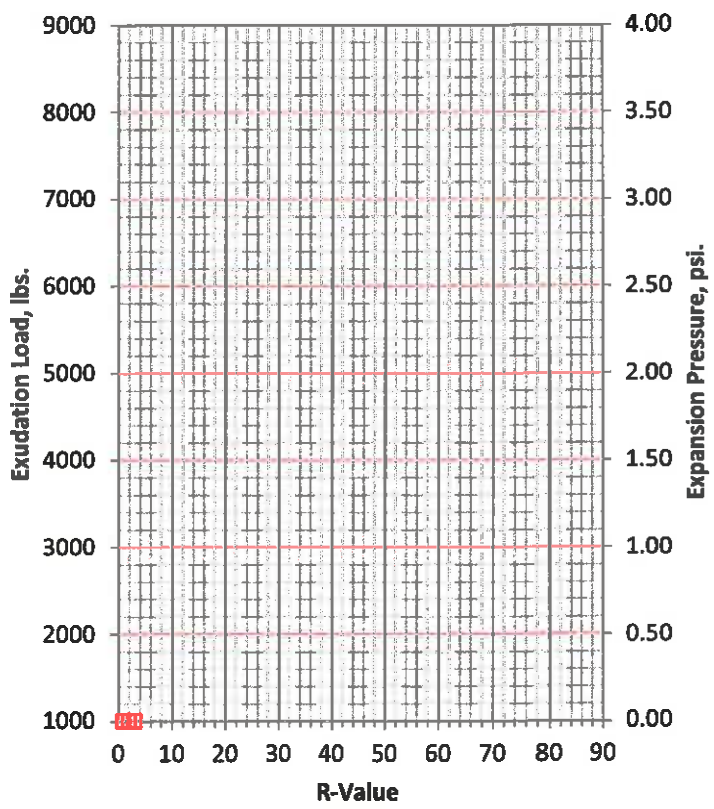

Tested By: Mike Sprague		Checked By: Geotechnical Engineer
Published Date:	May 11, 2016	Lab Manager: Ron Wright

TB

19775_MC_Clas._0082_AH-2_23.5ft.

ITD-803 10-11 L

REPORT OF TESTS ON SOILS

Sheet _____ Of _____

LIMS No 1E+05 Lab No. 16-9SL-0083

Key No. 19775 Project No. A019 (775) Source No.

Ident. No. CC / E162660 - B - PE / 28.5 ft. County Nez Perce Date Sampled April 26, 2016

Submitted By Chad Clawson, DME For Chad Clawson, DME Date Received May 5, 2016

Station Test Hole BH-2 Depth 28.5-29.25ft.

Description of Soil silty sand with gravel

Mechanical Analysis % Pass		Soil Properties		Soil Properties	
3 In.	100	Liquid Limit	52	pH	
2 In.	100	Plastic Limit	33	Resistivity (ohm-cm)	
1 In.	100	Plasticity Index	19	Natural Moisture (%)	22.95
3/4 In.	100	Sp. Gr. (+19mm)		Odor	
1/2 In.	87	Sp. Gr. (-No.4)		Organic	
No. 4	72	Sand Equivalent		Texture	
No.10	62	R - Value		Color	
No. 20	53	Exp. Pressure, Psi			
No. 30	51	Unified Classification	SM	AASHTO Classification:	A-7-5(3)
No. 40	49				
No. 50	47	Remarks	This report covers only material as represented by this sample and does notnecessarily cover all soil from this layer or source.		
No. 100	44				
No. 200	38.7				

R VALUE

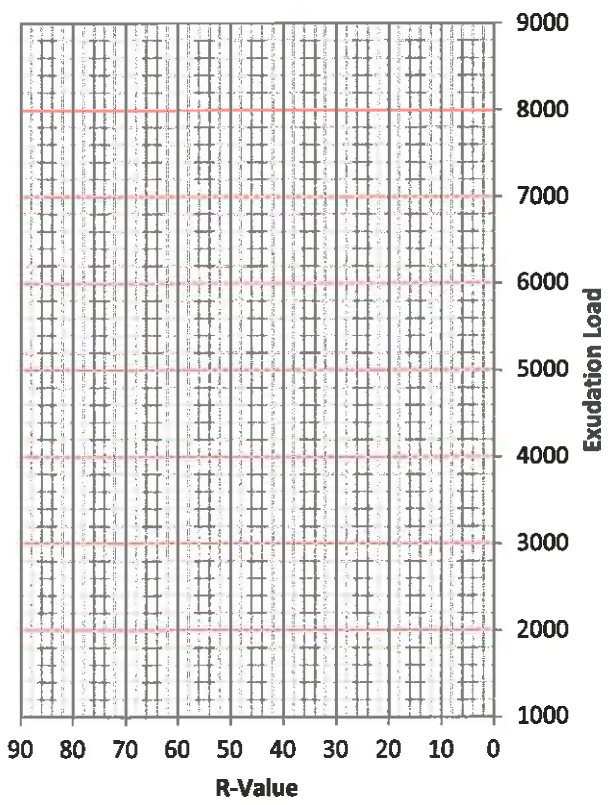

EXPANSION PRESSURE

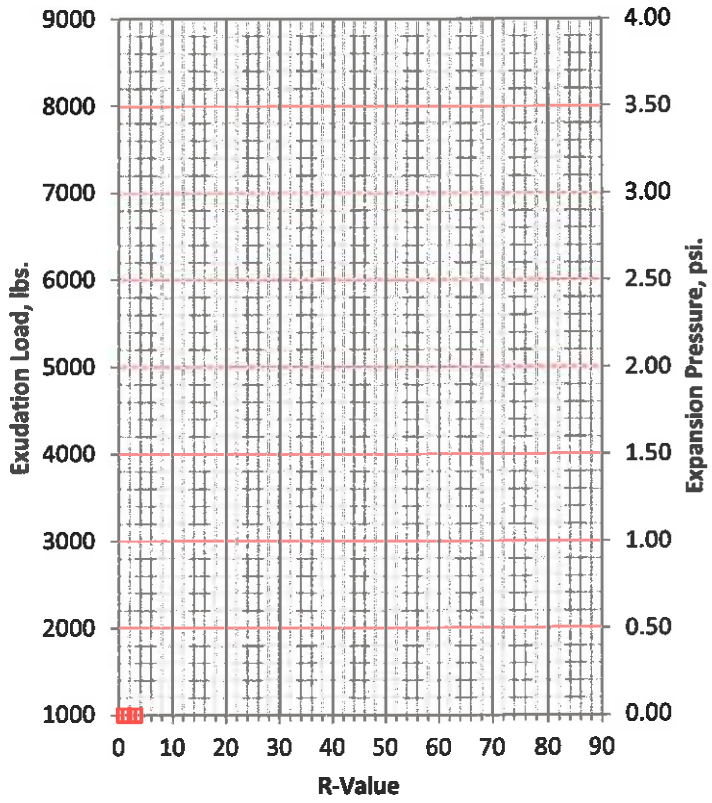

Tested By: Mike Sprague		Checked By: Geotechnical Engineer
Published Date:	May 11, 2016	Lab Manager: Ron Wright

TB

19775_MC_Clas._0083_AH-2_28.5ft.

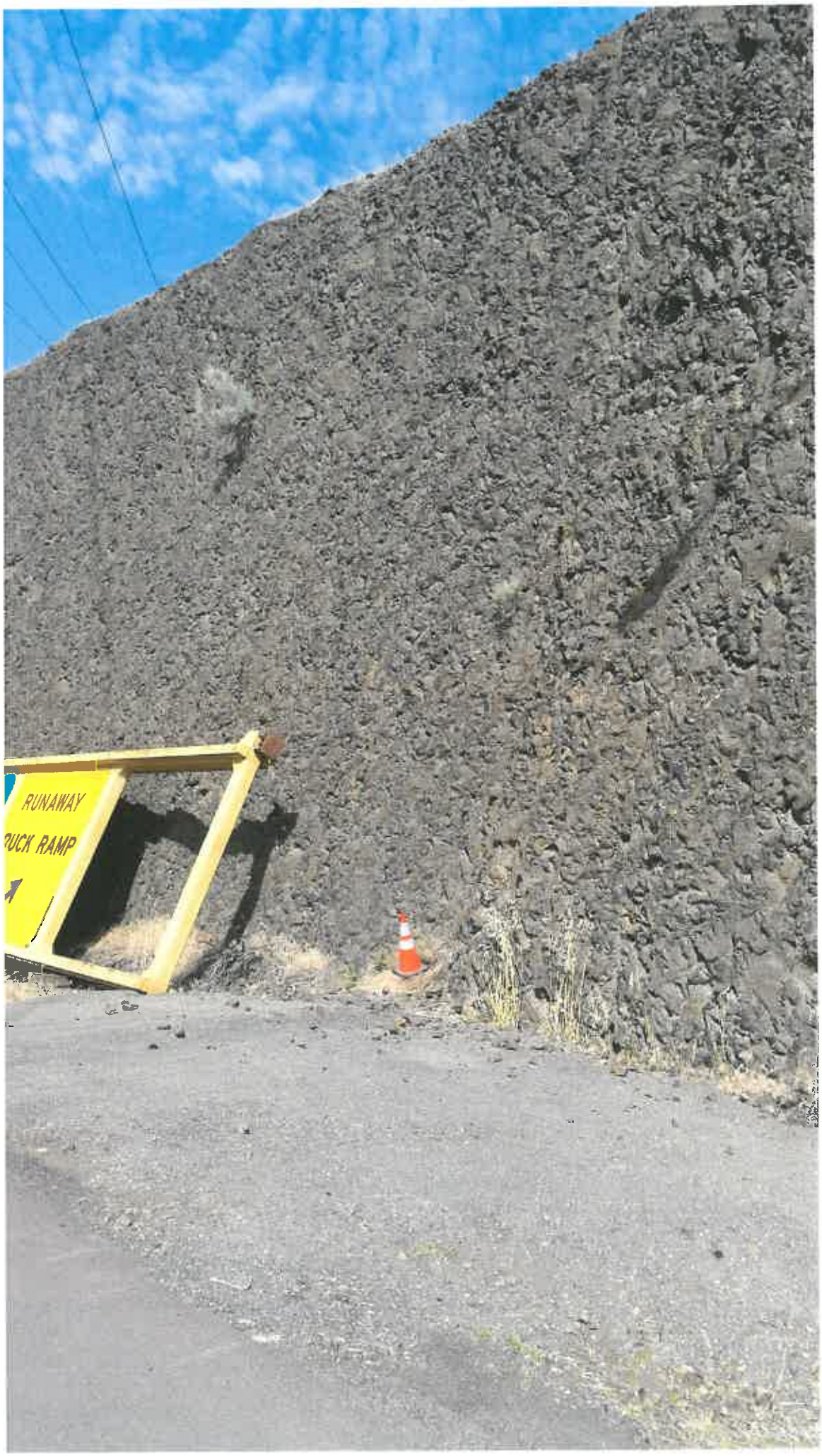
RUNAWAY
RUCK RAMP